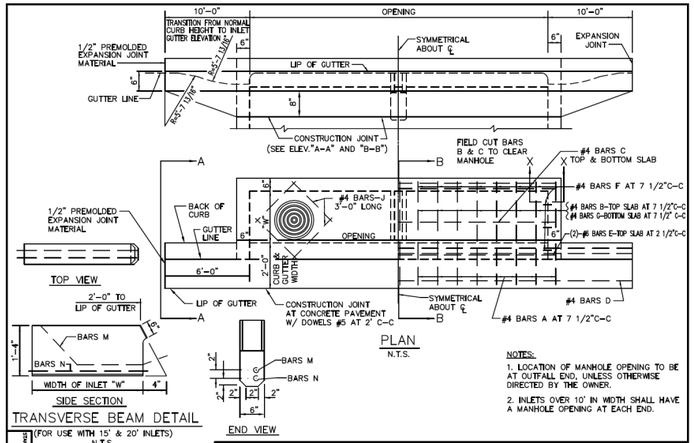

NOTES:

1. LOCATION OF MANHOLE OPENING TO BE AT OUTFALL END, UNLESS OTHERWISE DIRECTED BY THE OWNER.
2. INLETS OVER 10' IN WIDTH SHALL HAVE A MANHOLE OPENING AT EACH END.

STANDARD DRAWING NO. 6020A

CURB INLET	North Central Texas Council of Governments	STANDARD SPECIFICATION REFERENCE 702	
5', 10', 15' OR 20' OPENING		DATE OCT. '04	STANDARD DRAWING NO. 6020A

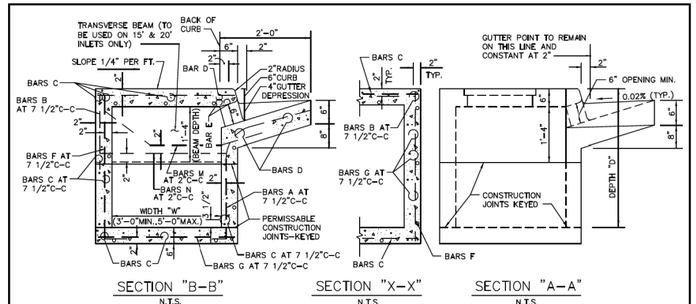

GENERAL NOTES:

1. ALL CONCRETE SHALL BE CLASS "A" CONCRETE.
2. REINFORCING BARS SHALL BE STANDARD GRADE STEEL, DEFORMED REINFORCING BARS OF A DIAMETER AND LENGTH AS SHOWN.
3. CHAMFER ALL EXPOSED CORNERS 3/4" EXCEPT WHERE OTHERWISE NOTED.
4. DIMENSIONS RELATING TO REINFORCING STEEL ARE TO CENTERS OF BARS.
5. FIELD CUT AND BEND BARS AS NECESSARY TO ACCOMODATE STORM SEWER PIPE.
6. RING AND COVER SHALL BE APPROVED BY THE OWNER AND INSTALLED BY THE CONTRACTOR.

STANDARD DRAWING NO. 6020B

CURB INLET	North Central Texas Council of Governments	STANDARD SPECIFICATION REFERENCE 702	
CROSS SECTION & INLET THROAT		DATE OCT. '04	STANDARD DRAWING NO. 6020B

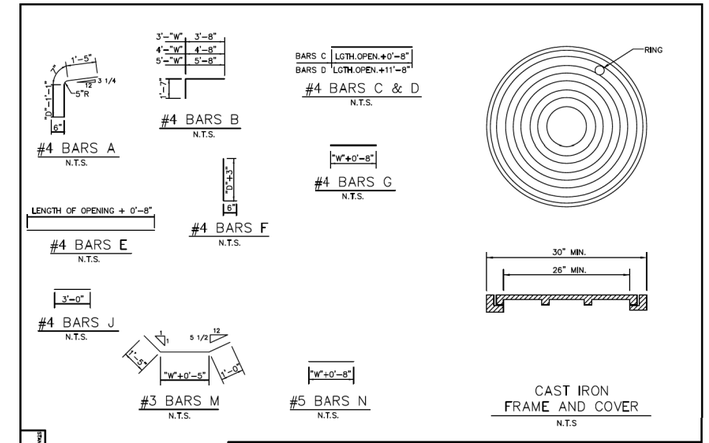

STANDARD DRAWING NO. 6020C

CURB INLET	North Central Texas Council of Governments	STANDARD SPECIFICATION REFERENCE 702	
REBAR & M.H. FRAME & COVER		DATE OCT. '04	STANDARD DRAWING NO. 6020C

BILL OF REINFORCING STEEL

DEPTH "D"	ALL WIDTHS AND LENGTHS				OPENING LENGTH "L" = 5ft Widths "W" 3ft	4ft	5ft				OPENING LENGTH "L" = 10ft Widths "W" 3ft	4ft	5ft				OPENING LENGTH "L" = 15 ft Widths "W" 3ft	4ft	5ft				OPENING LENGTH "L" = 20 ft Widths "W" 3ft	4ft	5ft			
	BARS C	BARS D	BARS E	BARS J	BARS F	BARS F	BARS F	BARS A	BARS B	BARS G	BARS F	BARS F	BARS F	BARS A	BARS B	BARS G	BARS F	BARS F	BARS F	BARS A	BARS B	BARS G	BARS M	BARS N	BARS F	BARS F	BARS F	BARS A	BARS B	BARS G	BARS M	BARS N
3'-6"	17	3	2	4	20	24	28	10	10	20	28	32	36	18	18	28	36	40	44	26	26	36	2	2	44	48	52	34	34	44	2	2
3'-9"	18	"	"	"	"	"	"	"	"	20	"	"	"	"	"	28	"	"	"	"	"	36	"	"	"	"	"	"	"	"	44	"	"
4'-0"	19	"	"	"	"	"	"	"	"	24						32						40								48		
4'-3"	19	"	"	"	"	"	"	"	"	24	"	"	"	"	"	32	"	"	"	"	"	40	"	"	"	"	"	"	"	48	"	"
4'-6"	21	"	"	"	"	"	"	"	"	26	"	"	"	"	"	34	"	"	"	"	"	42	"	"	"	"	"	"	"	50	"	"
4'-9"	21	"	"	"	"	"	"	"	"	26	"	"	"	"	"	34	"	"	"	"	"	42	"	"	"	"	"	"	"	50	"	"
5'-0"	21	"	"	"	"	"	"	"	"	26	"	"	"	"	"	34	"	"	"	"	"	42	"	"	"	"	"	"	"	50	"	"
5'-3"	23	"	"	"	"	"	"	"	"	28	"	"	"	"	"	36	"	"	"	"	"	44	"	"	"	"	"	"	"	52	"	"
5'-6"	23	"	"	"	"	"	"	"	"	28	"	"	"	"	"	36	"	"	"	"	"	44	"	"	"	"	"	"	"	52	"	"
5'-9"	25	"	"	"	"	"	"	"	"	30	"	"	"	"	"	38	"	"	"	"	"	46	"	"	"	"	"	"	"	54	"	"
6'-0"	25	"	"	"	"	"	"	"	"	30	"	"	"	"	"	38	"	"	"	"	"	46	"	"	"	"	"	"	"	54	"	"
6'-3"	26	"	"	"	"	"	"	"	"	30	"	"	"	"	"	38	"	"	"	"	"	46	"	"	"	"	"	"	"	54	"	"
6'-6"	27	"	"	"	"	"	"	"	"	32	"	"	"	"	"	40	"	"	"	"	"	48	"	"	"	"	"	"	"	56	"	"
6'-9"	27	"	"	"	"	"	"	"	"	32						40						48								56		
7'-0"	29	"	"	"	"	"	"	"	"	34	"	"	"	"	"	42	"	"	"	"	"	50	"	"	"	"	"	"	"	58	"	"
7'-3"	29	"	"	"	"	"	"	"	"	34	"	"	"	"	"	42	"	"	"	"	"	50	"	"	"	"	"	"	"	58	"	"
7'-6"	30	"	"	"	"	"	"	"	"	34	"	"	"	"	"	42	"	"	"	"	"	50	"	"	"	"	"	"	"	58	"	"
7'-9"	31	"	"	"	"	"	"	"	"	36	"	"	"	"	"	44	"	"	"	"	"	52	"	"	"	"	"	"	"	60	"	"
8'-0"	31	"	"	"	"	"	"	"	"	36						44						52								60		
8'-3"	32	"	"	"	"	"	"	"	"	36	"	"	"	"	"	44	"	"	"	"	"	52	"	"	"	"	"	"	"	60	"	"
8'-6"	33	"	"	"	"	"	"	"	"	38	"	"	"	"	"	46	"	"	"	"	"	54	"	"	"	"	"	"	"	62	"	"
8'-9"	34	"	"	"	"	"	"	"	"	38	"	"	"	"	"	46	"	"	"	"	"	54	"	"	"	"	"	"	"	62	"	"
9'-0"	35	"	"	"	"	"	"	"	"	40	"	"	"	"	"	48	"	"	"	"	"	56	"	"	"	"	"	"	"	64	"	"
9'-3"	36	"	"	"	"	"	"	"	"	40	"	"	"	"	"	48	"	"	"	"	"	56	"	"	"	"	"	"	"	64	"	"
9'-6"	37	"	"	"	"	"	"	"	"	42	"	"	"	"	"	50	"	"	"	"	"	58	"	"	"	"	"	"	"	66	"	"
10'-0"	38	"	"	"	"	"	"	"	"	42	"	"	"	"	"	50	"	"	"	"	"	58	"	"	"	"	"	"	"	66	"	"

NOTE:
FOR CONVENIENCE, DEPTHS OF INLETS SHOWN IN ABOVE TABLES ARE IN INCREMENTS OF 3 INCHES BUT ANY DEPTHS OTHER THAN THOSE SHOWN ABOVE MAY BE USED WHEREVER DEEMED NECESSARY. QUANTITIES FOR OTHER DEPTHS FALLING WITHIN THE LIMITS OF THE TABLE MAY BE FOUND BY INTERPOLATION.

STANDARD DRAWING NO. 6020D

CURB INLET	North Central Texas Council of Governments	STANDARD SPECIFICATION REFERENCE 702	
BILL OF REINFORCING STEEL		DATE OCT. '04	STANDARD DRAWING NO. 6020D

SUMMARY OF QUANTITIES FOR CURB INLETS

DEPTH "D"	5'-0" OPENING WIDTH 3'-0" CONC C.Y.	STEEL LBS.	WIDTH 4'-0" CONC C.Y.	STEEL LBS.	WIDTH 5'-0" CONC C.Y.	STEEL LBS.	10'-0" OPENING WIDTH 3'-0" CONC C.Y.	STEEL LBS.	WIDTH 4'-0" CONC C.Y.	STEEL LBS.	WIDTH 5'-0" CONC C.Y.	STEEL LBS.	15'-0" OPENING WIDTH 3'-0" CONC C.Y.	STEEL LBS.	WIDTH 4'-0" CONC C.Y.	STEEL LBS.	WIDTH 5'-0" CONC C.Y.	STEEL LBS.	20'-0" OPENING WIDTH 3'-0" CONC C.Y.	STEEL LBS.	WIDTH 4'-0" CONC C.Y.	STEEL LBS.	WIDTH 5'-0" CONC C.Y.	STEEL LBS.
3'-6"	2.62	306	2.95	332	3.28	373	4.12	479	4.64	521	5.20	564	5.69	667	6.40	721	7.10	775	7.20	846	8.11	909	9.03	976
3'-9"	2.70	309	3.04	341	3.39	373	4.25	494	4.78	536	5.34	579	5.87	687	6.58	741	7.30	796	7.42	874	8.34	937	9.27	1010
4'-0"	2.78	328	3.14	364	3.49	399	4.38	518	4.92	565	5.49	610	6.05	718	6.77	776	7.49	835	7.64	909	8.58	976	9.51	1046
4'-3"	2.87	334	3.23	370	3.59	406	4.51	526	5.06	573	5.64	619	6.22	729	6.95	787	7.69	847	7.87	922	8.81	990	9.75	1061
4'-6"	2.95	356	3.32	394	3.69	431	4.64	558	5.20	607	5.79	656	6.40	770	7.14	830	7.88	891	8.09	973	9.04	1043	9.99	1115
4'-9"	3.03	361	3.41	410	3.79	438	4.77	566	5.34	616	5.94	665	6.57	780	7.32	841	8.07	903	8.31	986	9.27	1056	10.23	1129
5'-0"	3.12	367	3.51	416	3.90	445	4.90	574	5.47	624	6.09	674	6.75	791	7.51	853	8.27	915	8.53	999	9.50	1070	10.47	1144
5'-3"	3.20	383	3.60	424	4.00	465	5.03	600	5.61	652	6.23	704	6.93	827	7.69	890	8.46	955	8.76	1044	9.73	1118	10.71	1194
5'-6"	3.28	389	3.69	430	4.10	472	5.16	608	5.75	661	6.38	713	7.11	837	7.88	901	8.66	967	8.98	1057	9.97	1131	10.95	1208
5'-9"	3.37	405	3.78	451	4.20	495	5.29	635	5.89	690	6.53	744	7.28	874	8.07	940	8.85	1007	9.20	1102	10.20	1178	11.19	1258
6'-0"	3.45	415	3.88	460	4.30	504	5.42	646	6.03	702	6.68	757	7.45	888	8.25	954	9.05	1022	9.42	1119	10.43	1196	11.43	1276
6'-3"	3.53	425	3.97	470	4.41	515	5.55	661	6.17	718	6.83	773	7.63	908	8.44	975	9.24	1044	9.64	1147	10.66	1223	11.67	1305
6'-6"	3.62	437	4.06	486	4.51	532	5.68	681	6.31	739	6.97	797	7.81	935	8.62	1005	9.43	1057	9.87	1178	10.89	1258	11.92	1340
6'-9"	3.70	441	4.15	490	4.61	537	5.81	688	6.45	747	7.12	806	7.98	945	8.81	1015	9.63	1066	10.09	1191	11.12	1272	12.15	1355
7'-0"	3.78	460	4.25	510	4.71	560	5.94	716	6.59	777	7.27	837	8.16	981	8.99	1053	9.82	1126	10.31	1237	11.35	1319	12.40	1404
7'-3"	3.86	465	4.34	516	4.81	567	6.07	724	6.72	785	7.42	846	8.33	992	9.18	1065	10.02	1138	10.53	1249	11.59	1333	12.64	1418
7'-6"	3.95	477	4.43	529	4.91	570	6.20	742	6.86	804	7.57	866	8.51	1016	9.36	1089	10.21	1163	10.75	1290	11.82	1365	12.88	1451
7'-9"	4.03	491	4.53	544	5.02	597	6.33	762	7.00	826	7.71	890	8.67	1040	9.55	1116	10.41	1193	10.98	1313	12.05	1399	13.12	1498
8'-0"	4.12	496	4.62	550	5.12	604	6.46	770	7.14	834	7.86	899	8.86	1051	9.73	1129	10.60	1205	11.20	1325	12.28	1412	13.36	1510
8'-3"	4.20	504	4.71	559	5.22	613	6.59	784	7.28	849	8.01	915	9.04	1069	9.92	1149	10.80	1228	11.42	1353	12.51	1440	13.60	1529
8'-6"	4.28	519	4.80	576	5.32	632	6.71	804	7.42	871	8.16	938	9.21	1107	10.10	1176	10.99	1257	11.64	1385	12.74	1474	13.84	1565
8'-9"	4.37	528	4.90	586	5.42	643	6.84	819	7.56	886	8.31	954	9.39	1119	10.29	1199	11.18	1280	11.87	1410	12.97	1500	14.08	1592
9'-0"	4.45	545	4.99	605	5.53	664	6.97	842	7.70	912	8.46	982	9.56	1148	10.47	1231	11.38	1313	12.09	1447	13.21	1539	14.32	1631
9'-3"	4.53	554	5.08	614	5.63	674	7.10	858	7.84	929	8.60	999	9.74	1169	10.66	1252	11.57	1335	12.31	1474	13.44	1563	14.56	1660
9'-6"	4.62	568	5.17	630	5.73	692	7.23	878	7.97	950	8.75	1022	9.92	1195	10.84	1280	11.77	1365	12.53	1505	13.67	1600	14.80	1696
10'-0"	4.78	582	5.36	645	5.93	708	7.49	900	8.11	974	9.05	1048	10.27	1227	11.21	1312	12.16	1399	12.98	1546	14.13	1642	15.29	1739

NOTE:
FOR CONVENIENCE, DEPTHS OF INLETS SHOWN IN ABOVE TABLES ARE IN INCREMENTS OF 3 INCHES BUT ANY DEPTHS OTHER THAN THOSE SHOWN ABOVE MAY BE USED WHEREVER DEEMED NECESSARY. QUANTITIES FOR OTHER DEPTHS FALLING WITHIN THE LIMITS OF THE TABLE MAY BE FOUND BY INTERPOLATION.

STANDARD DRAWING NO. 6020E

CURB INLET	North Central Texas Council of Governments	STANDARD SPECIFICATION REFERENCE 702	
SUMMARY OF QUANTITIES		DATE OCT. '04	STANDARD DRAWING NO. 6020E

STATE OF TEXAS
BROOK D. RETTA
131068
LICENSED PROFESSIONAL ENGINEER
NOV 07, 2019

REVISIONS

REV NO.	DATE	DESCRIPTION	BY
1			
2			

ADDISON

CRIADO
4100 SPRING VALLEY ROAD, SUITE 1001
DALLAS, TX 75244
O: 972-392-9092 F: 972-392-9192
FIRM NO. F-4373

CONSTRUCTION DETAILS
SHEET 4 OF 6

OAKS NORTH DRIVE
DRAINAGE IMPROVEMENTS

TOWN OF ADDISON, TEXAS

DESIGN	DRAWN	DATE	SCALE	NOTES	FILE	NO.
CRIADO	CRIADO	NOV 2019	AS SHOWN	R14285.01	DETAILS	CD-04

DATE: 11/18/2020
TIME: 12:20 PM
FILE NAME: N:\PROJECT\R14285.00_Addison_2017 Various Projects\R14285.01_White Rock Drainage\07_DGN\076_Sheets\1428501_Details.dgn