CIVIL & LANDSCAPE PLANS FOR CONSTRUCTION OF
PAVING, STREETSCAPE & UTILITY IMPROVEMENTS

ADDISON RESIDENTIAL ADDITION

SHEET NO.	INDEX OF DRAWINGS
C1	COVER SHEET
C2, C3	FINAL PLAT
C4	HORIZONTAL CONTROL PLAN
C4a	DEMOLITION PLAN
C5	PAVING TYPICAL SECTIONS
C6	RECOMMENDED UTILITY LOCATIONS
C7	SIGNAGE & STRIPING PLAN
C8-C12	PAVING PLANS & PROFILES
C13	ROUGH GRADING PLAN
C14	SLEEVING PLAN
C15	PAVING DETAILS
C16, C17	STREETSCAPE PLANS
C18, C19	STREETSCAPE, LIGHT & SUBDRAIN DETAILS
C20	DRAINAGE AREA MAP
C21-C25	STORM WATER PLANS
C26, C27	STORM WATER PROFILES
C28, C29	STORM WATER DETAILS
C30	WATER & WASTEWATER PLAN
C31, C32	WATER & WASTEWATER PROFILES
C33-C36	WATER & WASTEWATER DETAILS
C37	POLLUTION CONTROL PLAN
C38	POLLUTION CONTROL DETAILS
C39	ELECTRICAL PLAN
C40	ELECTRICAL SYMBOLS, NOTES & SCHEDULES
C41	PLANTING & FURNITURE PLAN
C42	PLANTING DETAILS
C43, C44	IRRIGATION PLANS
C45	TOWN OF ADDISON IRRIGATION SPECS.
C46	IRRIGATION DETAILS

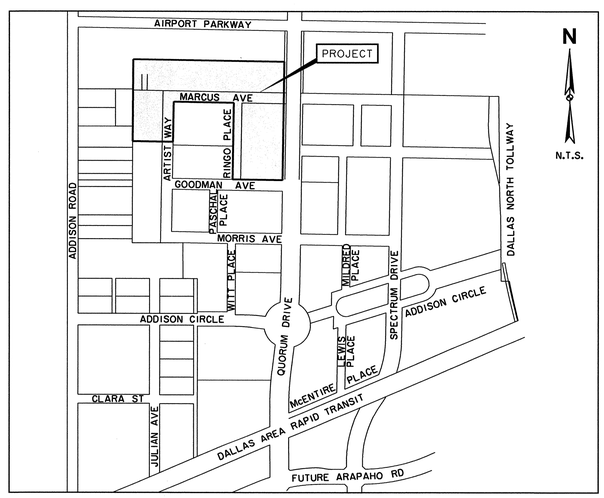

LOCATION MAP

OWNER:

FAIRFIELD RESIDENTIAL, LLC
2045 N. HIGHWAY 360, SUITE 250
GRAND PRAIRIE, TEXAS 75050
(817) 307–8060

ENGINEER:

HUITT–ZOLLARS, INC.
3131 McKINNEY AVE., SUITE 600
DALLAS, TEXAS 75204
(214) 871–3311 FAX (214) 871–0757
KEVIN N. CARLSON, P.E.
email: kcarlson@huitt–zollars.com
TX. REG. NO. 89232

RECORD DRAWING

THIS DRAWING HAS BEEN MODIFIED FROM THE ORIGINAL TO SHOW ONLY THE FIELD CHANGES AND ADJUSTMENTS MADE DURING CONSTRUCTION BY THE CONTRACTOR WHICH WERE DOCUMENTED AND FURNISHED TO THE ENGINEER FOR THE PURPOSE OF PREPARING THESE RECORD DRAWINGS. FIELD INSPECTION OF CONSTRUCTION WAS PERFORMED BY OTHERS. TO THE BEST OF OUR KNOWLEDGE AND UNDERSTANDING THESE RECORD DRAWINGS REPRESENT THE "AS-BUILT" CONDITIONS.

STATE OF TEXAS
KEVIN N. CARLSON
89232
REGISTERED PROFESSIONAL ENGINEER
1-09-09

RECORD DRAWINGS 1/09/09

h:\proj\0134080l\dgn\3629CV.DGN

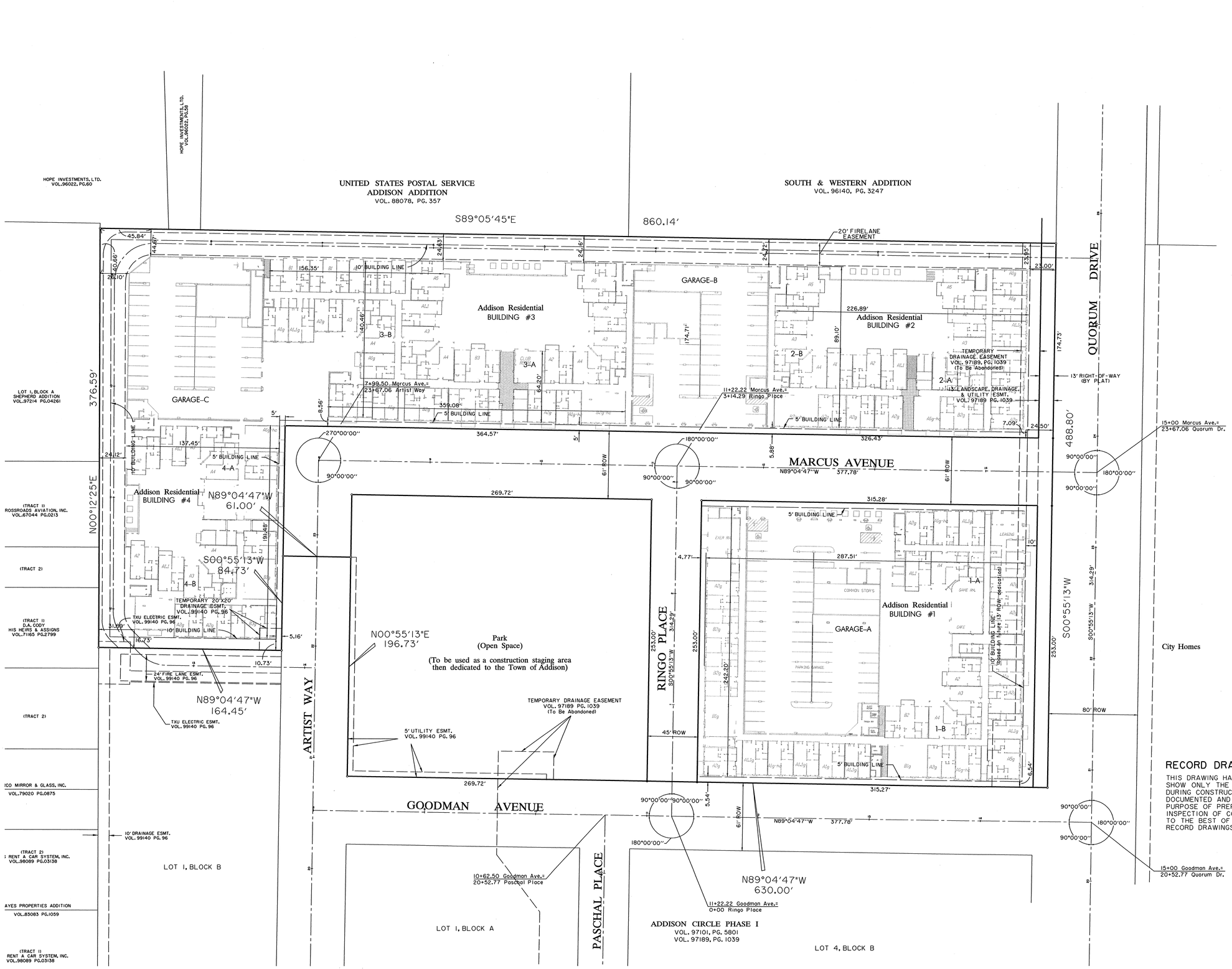

RECORD DRAWING

THIS DRAWING HAS BEEN MODIFIED FROM THE ORIGINAL TO SHOW ONLY THE FIELD CHANGES AND ADJUSTMENTS MADE DURING CONSTRUCTION BY THE CONTRACTOR WHICH WERE DOCUMENTED AND FURNISHED TO THE ENGINEER FOR THE PURPOSE OF PREPARING THESE RECORD DRAWINGS. FIELD INSPECTION OF CONSTRUCTION WAS PERFORMED BY OTHERS. TO THE BEST OF OUR KNOWLEDGE AND UNDERSTANDING THESE RECORD DRAWINGS REPRESENT THE "AS-BUILT" CONDITIONS.

STATE OF TEXAS
KEVIN N. CARLSON
89232
REGISTERED PROFESSIONAL ENGINEER
1-9-09

HORIZONTAL CONTROL PLAN

ADDISON RESIDENTIAL

TOWN OF ADDISON, TEXAS

Huitt - Zollars, Inc.
3131 Mckinney Ave., Suite 600, Dallas, TX 75204
Phone (214) 871-3311/Fax (214) 871-0757

DESIGN	CHECKED	APPR.	SCALE	DATE	PROJECT NO.	NO.
HZI	HZI	DEM	1"=40'	11/20/08		C4

h:\proj\01340801\dgn\3629HC01.DGN

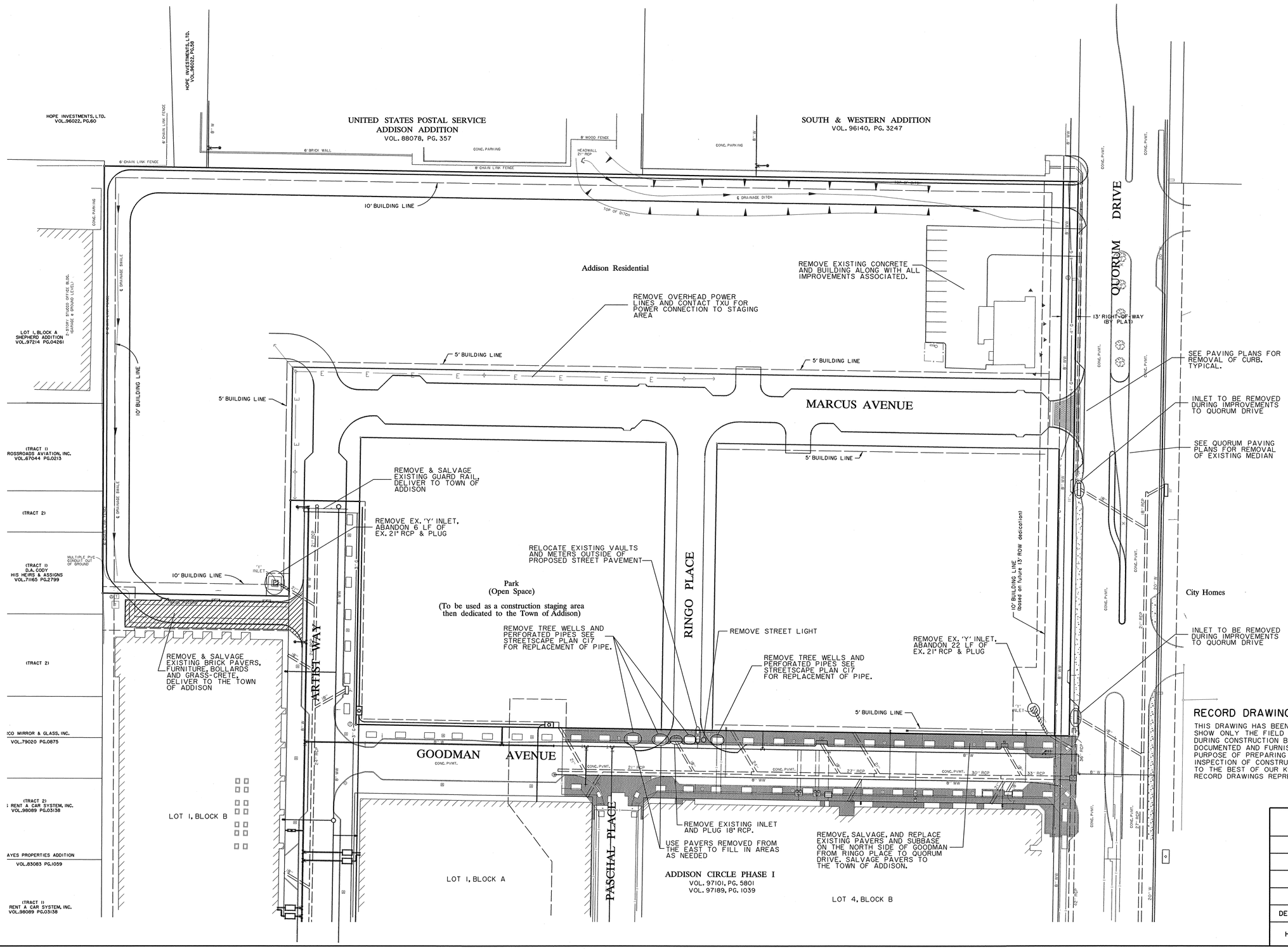

NOTE:

DELIVER ALL SALVAGED MATERIAL TO THE TOWN OF ADDISON SERVICE CENTER LOCATED AT:
16801 WESTGROVE DRIVE
ADDISON, TX 75001

RECORD DRAWING

THIS DRAWING HAS BEEN MODIFIED FROM THE ORIGINAL TO SHOW ONLY THE FIELD CHANGES AND ADJUSTMENTS MADE DURING CONSTRUCTION BY THE CONTRACTOR WHICH WERE DOCUMENTED AND FURNISHED TO THE ENGINEER FOR THE PURPOSE OF PREPARING THESE RECORD DRAWINGS. FIELD INSPECTION OF CONSTRUCTION WAS PERFORMED BY OTHERS. TO THE BEST OF OUR KNOWLEDGE AND UNDERSTANDING THESE RECORD DRAWINGS REPRESENT THE "AS-BUILT" CONDITIONS.

STATE OF TEXAS
KEVIN N. CARLSON
89232
REGISTERED PROFESSIONAL ENGINEER
1-9-09

DEMOLITION PLAN

ADDISON RESIDENTIAL

TOWN OF ADDISON, TEXAS

Huitt - Zollars, Inc.
3131 Mckinney Ave., Suite 600, Dallas, TX 75204
Phone (214) 871-3311/Fax (214) 871-0757

DESIGN	CHECKED	APPR.	SCALE	DATE	PROJECT NO.	NO.
HZI	HZI	DEM	1"=40'	11/20/08		C4a

h:\proj\01340801\dgn\3629DEMO.DGN

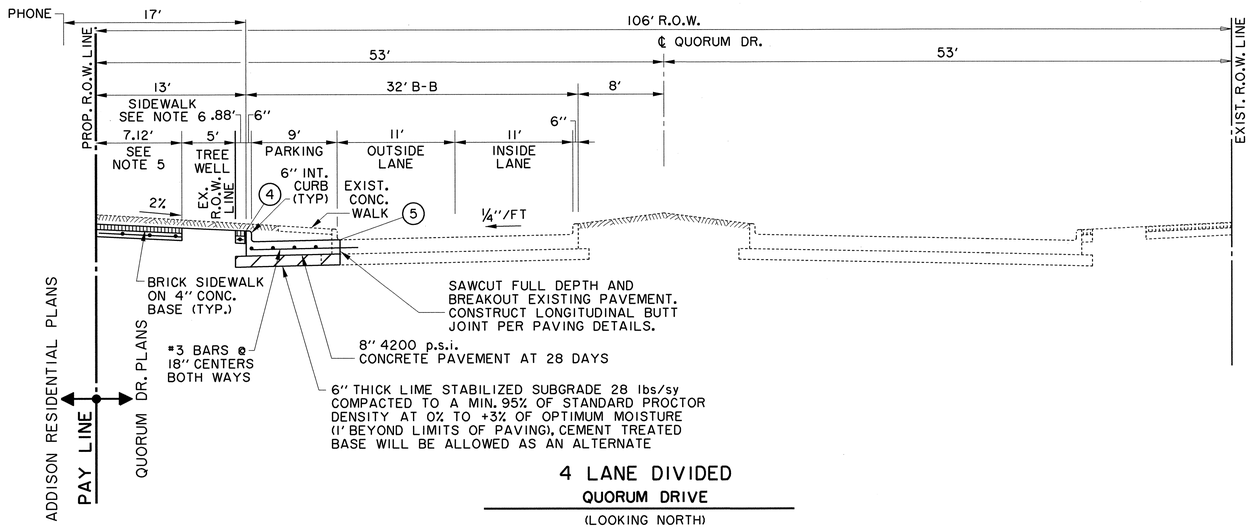

4 LANE DIVIDED
QUORUM DRIVE
(LOOKING NORTH)
(SEE PLAN VIEW FOR NECK-DOWN AREAS)

(FOR REFERENCE ONLY)

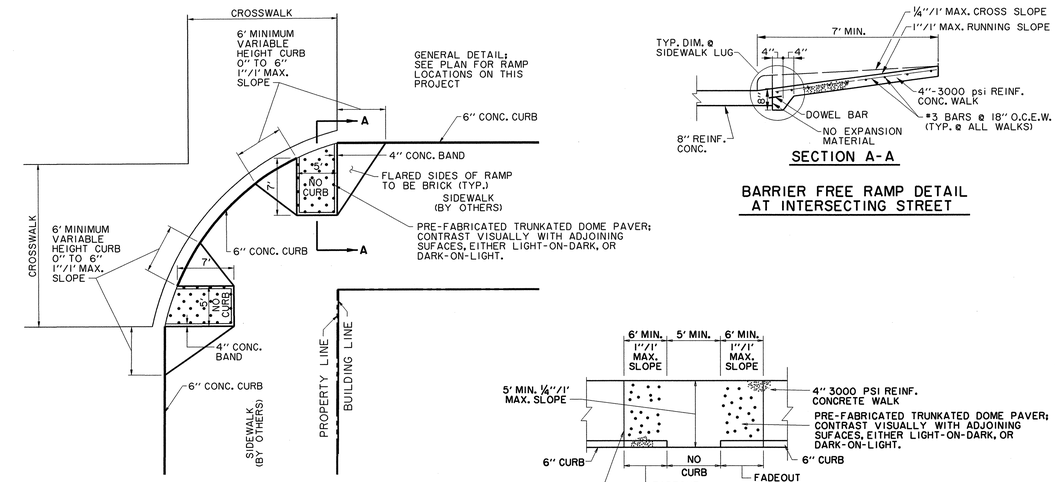

BARRIER FREE RAMP DETAIL AT INTERSECTING STREET

BARRIER FREE RAMP IN STRAIGHT CURB
SIDEWALK ADJACENT TO CURB

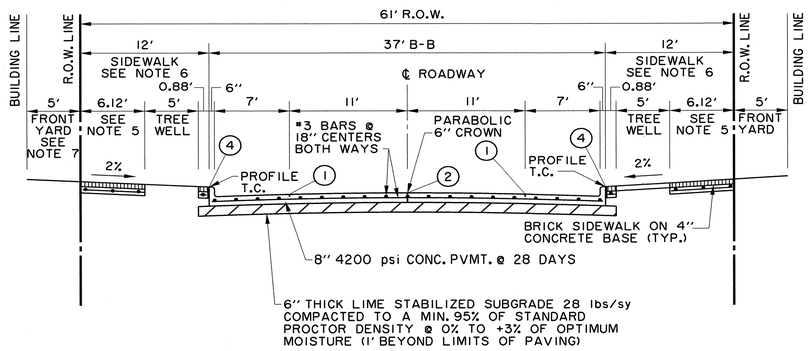

2 LANES UNDIVIDED
MARCUS AVENUE & ARTIST WAY
(SEE PLAN VIEW FOR NECK-DOWN AREAS)

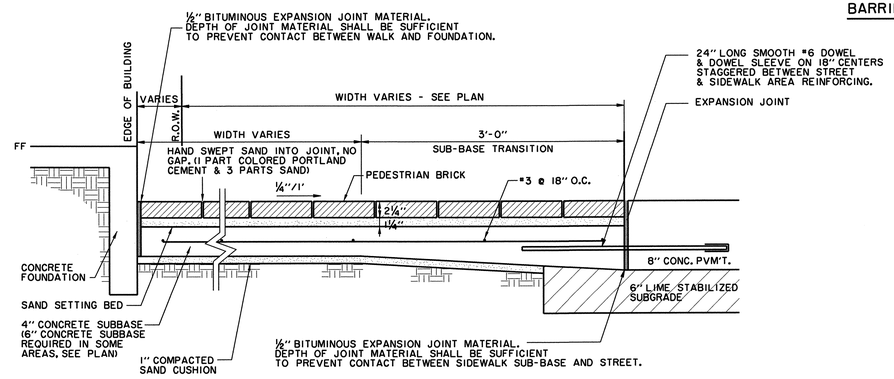

BRICK SIDEWALK IN PEDESTRIAN AREA
EAST SIDE OF RINGO PLACE
N.T.S.

BARRIER FREE RAMP GENERAL NOTES

1. ALL ADA FACILITIES MUST PASS INDEPENDENT INSPECTION. LETTER OF COMPLIANCE ACCEPTANCE IS REQUIRED PRIOR TO FINAL ACCEPTANCE BY THE TOWN OF ADDISON.
2. MAXIMUM RUNNING SLOPE ON BARRIER FREE RAMPS MUST NOT EXCEED 1" PER FOOT @ ANY LOCATION.
3. DESIGNS SHOWN ARE FOR 6" CURBS. FOR CURBS WITH HEIGHT GREATER THAN 6" DIMENSIONS MUST BE INCREASED PROPORTIONATELY.
4. STREETS ON STEEP GRADE WILL REQUIRE LONGER TRANSITION ON UPGRADE SIDE.
5. LOCATION OF BARRIER FREE RAMP MAY BE SHIFTED TO CLEAR OBSTRUCTIONS.
6. CONC. TO HAVE MINIMUM 3000 psi COMPRESSIVE STRENGTH @ 28 DAYS.
7. REINFORCEMENT TO BE #3 DEFORMED BARS @ 18" O.C.E.W. & SUPPORTED BY APPROVED BAR CHAIRS ON 3'-0" CENTERS.

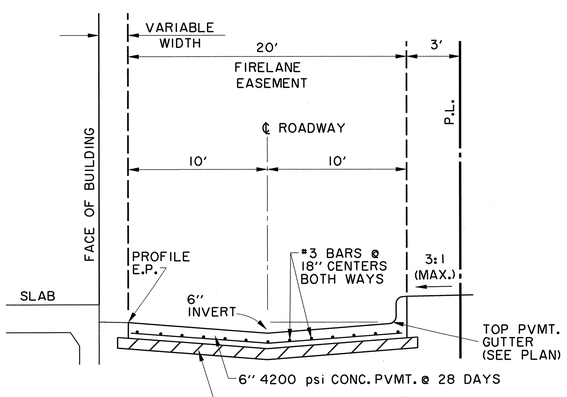

ALLEY
BEHIND BUILDINGS 2-4
LOOKING WEST

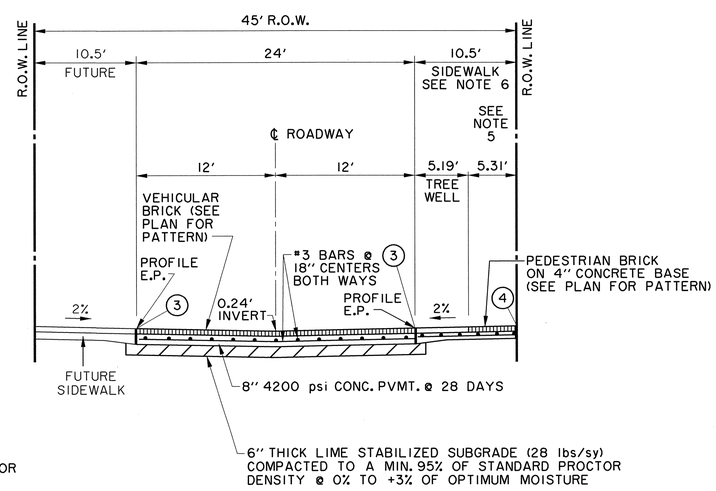

2 LANES UNDIVIDED
RINGO PLACE
LOOKING NORTH

NOTES:

1. BACKFILL MATERIAL IS NOT A SEPARATE PAY ITEM. MATERIAL ACQUIRED FROM EXCAVATION MAY BE USED IF APPROVED BY ENGINEER.
2. PAY LINE FOR UNCLASSIFIED STREET EXCAVATION IS THE RIGHT-OF-WAY LINE WHEN A BUILDING IS BEING CONSTRUCTED ADJACENT TO THE RIGHT-OF-WAY. EXCAVATION BEYOND THE RIGHT-OF-WAY LINE IS ACOUNTED FOR IN THE BUILDING EXCAVATION. PAY LINE FOR UNCLASSIFIED STREET EXCAVATION CAN BE BEYOND THE RIGHT-OF-WAY LINE WHEN ADJACENT TO UNDEVELOPED TRACTS.
3. SAWED DUMMY JOINTS SHALL MATCH EXISTING ON QUORUM DRIVE. SAWED JOINTS SHALL BE SPACED AT 12' INTERVALS ON PROPOSED RESIDENTIAL AND MEWS STREETS.
4. PROFILE GRADES SHOWN ON THE PAVING PLAN AND PROFILE SHEETS ARE TOP OF CURB AT BACK OF CURB FOR A NORMAL ROADWAY CROSS-SECTION AS INDICATED ON THE TYPICAL SECTIONS BY "PROFILE T.C.". PROFILE GRADES ON THE MEWS ARE EDGE OF PAVEMENT 12' LEFT AND RIGHT OF CENTERLINE AS INDICATED ON THE TYPICAL SECTION AS "PROFILE E.P.".
5. THE 2% MAXIMUM CROSS-SLOPE IN SIDEWALKS IS REQUIRED IN ALL AREAS PER T.A.S. REQUIREMENTS. CONFIRMATION OF ADA/TAS COMPLIANCE IS REQUIRED FOR ENTIRE PROJECT, OBTAINED FROM T.D.L.R. BY CONTRACTOR PRIOR TO ACCEPTANCE OF PROJECT.
6. SIDEWALK TYPICAL SECTIONS VARY ALONG EACH STREET AND FROM STREET TO STREET. THERE ARE SOME ENHANCED SIDEWALK SECTIONS AT TRASH LOCATIONS. SEE PAVING AND SURFACE PATTERNING PLANS FOR LOCATIONS AND DETAILS.
7. SIDEWALKS MAY CONTINUE INTO FRONT YARD UNDER SEPARATE CONTRACT. SEE STREETSCAPE PLANS FOR PAY LIMITS.

RECORD DRAWING

THIS DRAWING HAS BEEN MODIFIED FROM THE ORIGINAL TO SHOW ONLY THE FIELD CHANGES AND ADJUSTMENTS MADE DURING CONSTRUCTION BY THE CONTRACTOR WHICH WERE DOCUMENTED AND FURNISHED TO THE ENGINEER FOR THE PURPOSE OF PREPARING THESE RECORD DRAWINGS. FIELD INSPECTION OF CONSTRUCTION WAS PERFORMED BY OTHERS. TO THE BEST OF OUR KNOWLEDGE AND UNDERSTANDING THESE RECORD DRAWINGS REPRESENT THE "AS-BUILT" CONDITIONS.

STATE OF TEXAS
KEVIN N. CARLSON
89232
REGISTERED PROFESSIONAL ENGINEER
1-9-09

JOINT LEGEND:

1. - SAWED LONGITUDINAL DUMMY JOINT
2. - CONSTRUCTION JOINT (FULL WIDTH PVM'T. IS ALLOWED WHERE APPROVED BY THE TOWN OF ADDISON). FULL WIDTH PAVEMENT REQUIRES A SAWED LONGITUDINAL JOINT AT THE CENTERLINE OF THE PAVEMENT.
3. - EXPANSION JOINT
4. - ISOLATION JOINT
5. - LONGITUDINAL BUTT JOINT

BENCHMARKS:

BM#5
"□" CUT ON 8' INLET ON NORTH CURB LINE OF GOODMAN AVE. ±75' EAST OF PASCHAL PLACE.
ELEV. 629.98

BM#6
"□" CUT AT ℄ OF 8' INLET AT THE SOUTHWEST CORNER OF MORRIS AVE. AND WITT PLACE.
ELEV. 627.29

BM#7
"□" CUT AT WEST CORNER OF ADDISON THEATRE CENTRE PARKING LOT. SECOND ENTRANCE NORTH OF ADDISON RD.
ELEV. 637.66

PAVING TYPICAL SECTIONS
ADDISON RESIDENTIAL
TOWN OF ADDISON, TEXAS

Huitt - Zollars, Inc.
3131 Mckinney Ave., Suite 600, Dallas, TX 75204
Phone (214) 871-3311/Fax (214) 871-0757

DESIGN	CHECKED	APPR.	SCALE	DATE	PROJECT NO.	NO.
HZI	HZI		N.T.S.	11/20/08		C5

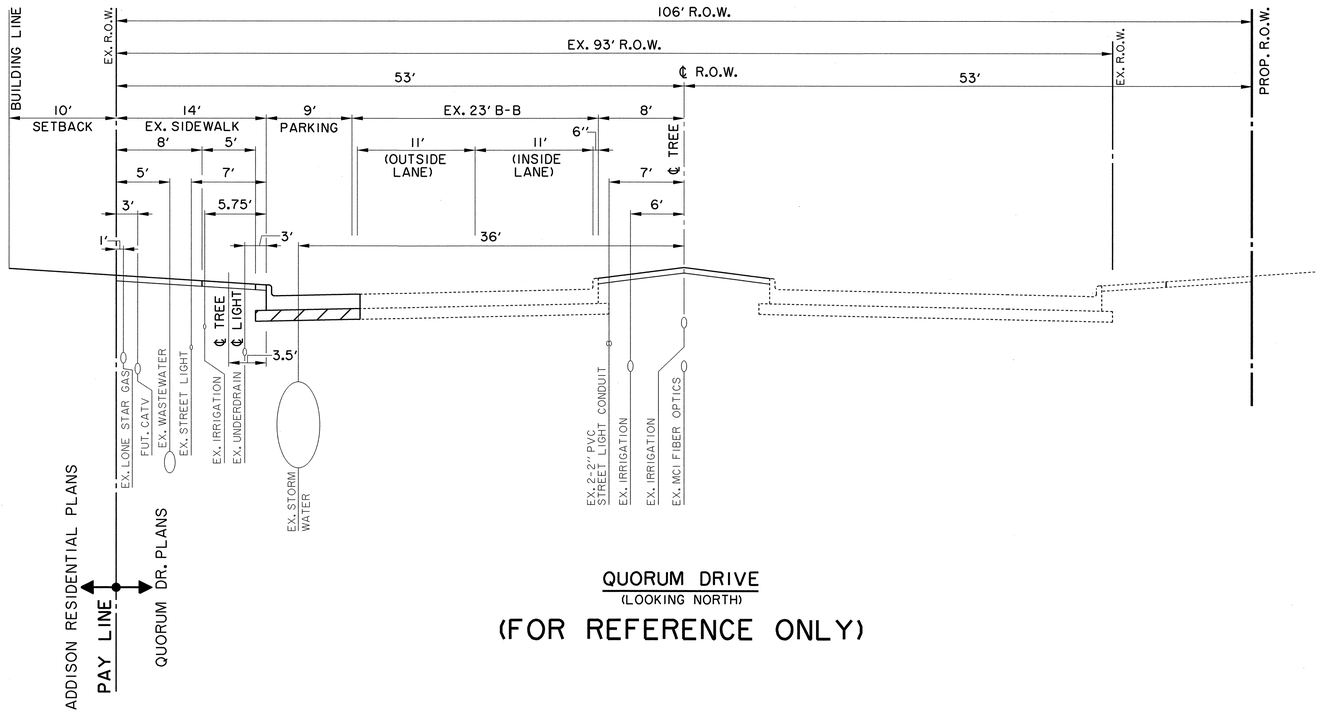

QUORUM DRIVE
(LOOKING NORTH)

(FOR REFERENCE ONLY)

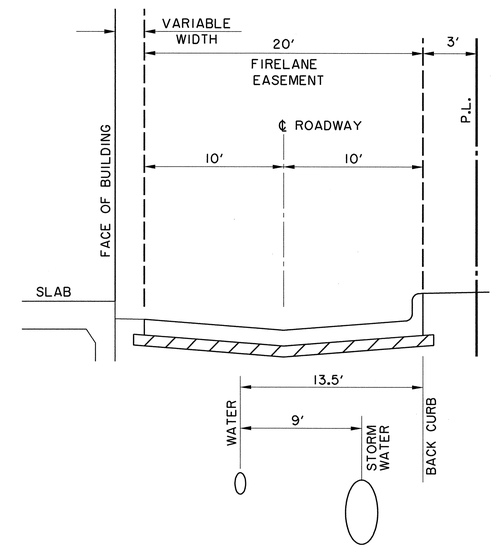

ALLEY
BEHIND BUILDINGS 2-4
LOOKING WEST

NOTE:
See Landscape Plans For
Landscaping Along Fire Lane Alley.

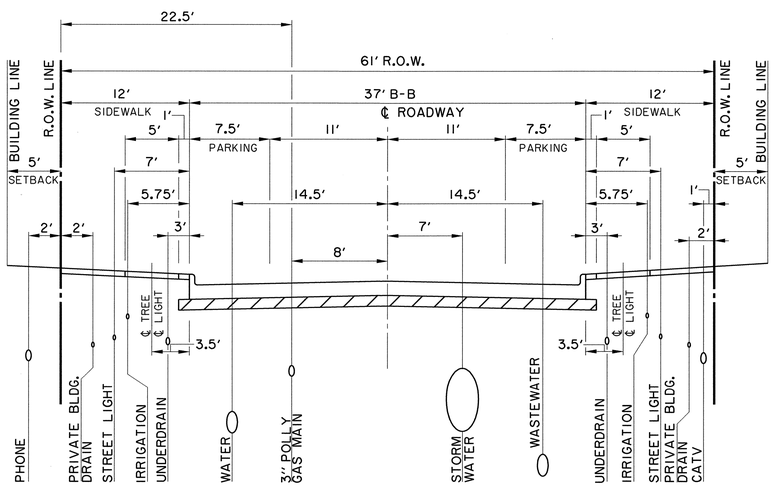

MARCUS AVENUE & ARTIST WAY
(LOOKING EAST & NORTH)

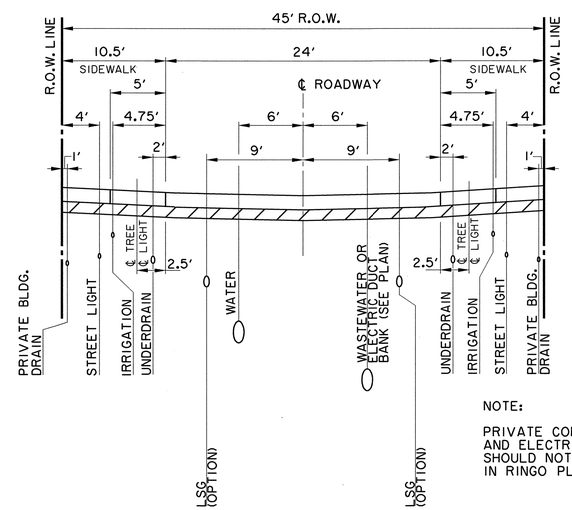

RINGO PLACE
(LOOKING NORTH)

NOTE:

PRIVATE COMMUNICATION AND ELECTRICAL LINES SHOULD NOT BE PLACED IN RINGO PLACE.

BENCHMARKS:

BM#5
"□" CUT ON 8' INLET ON NORTH CURB LINE OF GOODMAN AVE. ±75' EAST OF PASCHAL PLACE. ELEV. 629.98

BM#6
"□" CUT AT ℄ OF 8' INLET AT THE SOUTHWEST CORNER OF MORRIS AVE. AND WITT PLACE. ELEV. 627.29

BM#7
"□" CUT AT WEST CORNER OF ADDISON THEATRE CENTRE PARKING LOT, SECOND ENTRANCE NORTH OF ADDISON RD. ELEV. 637.66

RECORD DRAWING

THIS DRAWING HAS BEEN MODIFIED FROM THE ORIGINAL TO SHOW ONLY THE FIELD CHANGES AND ADJUSTMENTS MADE DURING CONSTRUCTION BY THE CONTRACTOR WHICH WERE DOCUMENTED AND FURNISHED TO THE ENGINEER FOR THE PURPOSE OF PREPARING THESE RECORD DRAWINGS. FIELD INSPECTION OF CONSTRUCTION WAS PERFORMED BY OTHERS. TO THE BEST OF OUR KNOWLEDGE AND UNDERSTANDING THESE RECORD DRAWINGS REPRESENT THE "AS-BUILT" CONDITIONS.

STATE OF TEXAS
KEVIN N. CARLSON
89232
REGISTERED PROFESSIONAL ENGINEER
1-9-09

RECOMMENDED UTILITY LOCATIONS

ADDISON RESIDENTIAL

TOWN OF ADDISON, TEXAS

Huitt - Zollars, Inc.
3131 Mckinney Ave., Suite 600, Dallas, TX 75204
Phone (214) 871-3311/Fax (214) 871-0757

DESIGN	CHECKED	APPR.	SCALE	DATE	PROJECT NO.	NO.
HZI	HZI		N.T.S.	11/20/08		C6

h:\proj\01340801\dgn\3629REUTLO.DGN

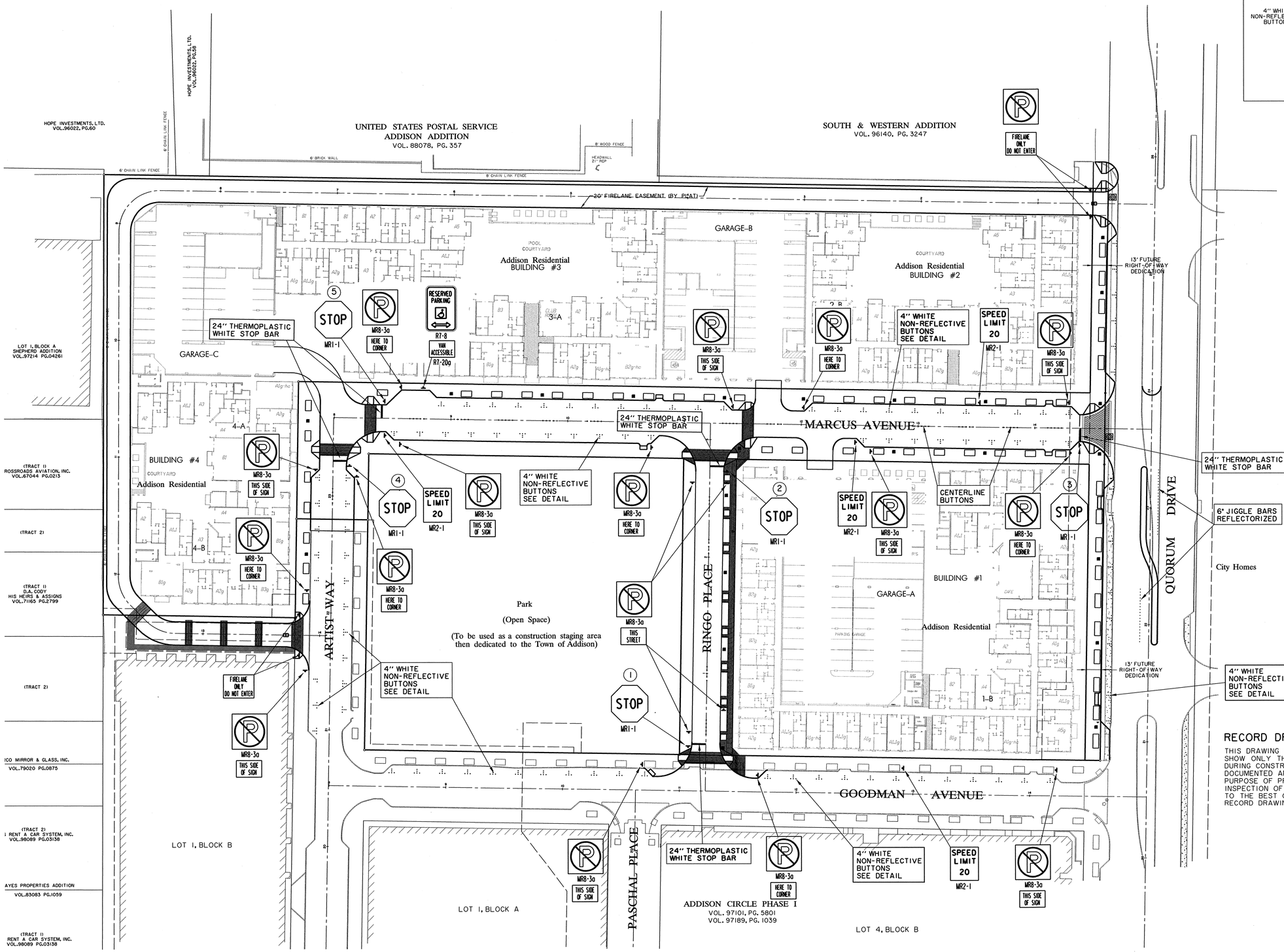

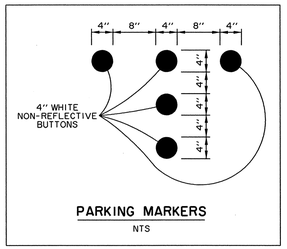

PARKING MARKERS

NTS

N

0 20 40 60 80

SCALE IN FEET

SCALE: 1" = 40'

STREET NAME SIGNS		
SIGN NO./ LOCATION	STREET NAME	MOUNTING
1	GOODMAN AVENUE	NEW SIGN POLE
	RINGO PLACE	
2	MARCUS AVENUE	NEW SIGN POLE
	RINGO PLACE	
3	MARCUS AVENUE	NEW SIGN POLE
	QUORUM DRIVE	
4	ARTIST WAY	NEW SIGN POLE
	MARCUS AVENUE	

NOTE:

EXACT SIGNAGE PLACEMENT TO BE DETERMINED IN THE FIELD BASED ON VISIBILITY CONCERNS.

BENCHMARKS:

BM#5
"□" CUT ON 8' INLET ON NORTH CURB LINE OF GOODMAN AVE. ±75' EAST OF PASCHAL PLACE.
ELEV. 629.98

BM#6
"□" CUT AT ℄ OF 8' INLET AT THE SOUTHWEST CORNER OF MORRIS AVE. AND WITT PLACE.
ELEV. 627.29

BM#7
"□" CUT AT WEST CORNER OF ADDISON THEATRE CENTRE PARKING LOT, SECOND ENTRANCE NORTH OF ADDISON RD.
ELEV. 637.66

RECORD DRAWING

THIS DRAWING HAS BEEN MODIFIED FROM THE ORIGINAL TO SHOW ONLY THE FIELD CHANGES AND ADJUSTMENTS MADE DURING CONSTRUCTION BY THE CONTRACTOR WHICH WERE DOCUMENTED AND FURNISHED TO THE ENGINEER FOR THE PURPOSE OF PREPARING THESE RECORD DRAWINGS. FIELD INSPECTION OF CONSTRUCTION WAS PERFORMED BY OTHERS. TO THE BEST OF OUR KNOWLEDGE AND UNDERSTANDING THESE RECORD DRAWINGS REPRESENT THE "AS-BUILT" CONDITIONS.

STATE OF TEXAS
KEVIN N. CARLSON
89232
REGISTERED PROFESSIONAL ENGINEER
1-9-09

SIGNAGE AND STRIPING PLAN

ADDISON RESIDENTIAL

TOWN OF ADDISON, TEXAS

Huitt - Zollars, Inc.
3131 Mckinney Ave., Suite 600, Dallas, TX 75204
Phone (214) 871-3311/Fax (214) 871-0757

DESIGN	CHECKED	APPR.	SCALE	DATE	PROJECT NO.	NO.
HZI	HZI	DEM	1"=40'	11/20/08		C7

h:\proj\01340801\dgn\3629SIGN1.DGN

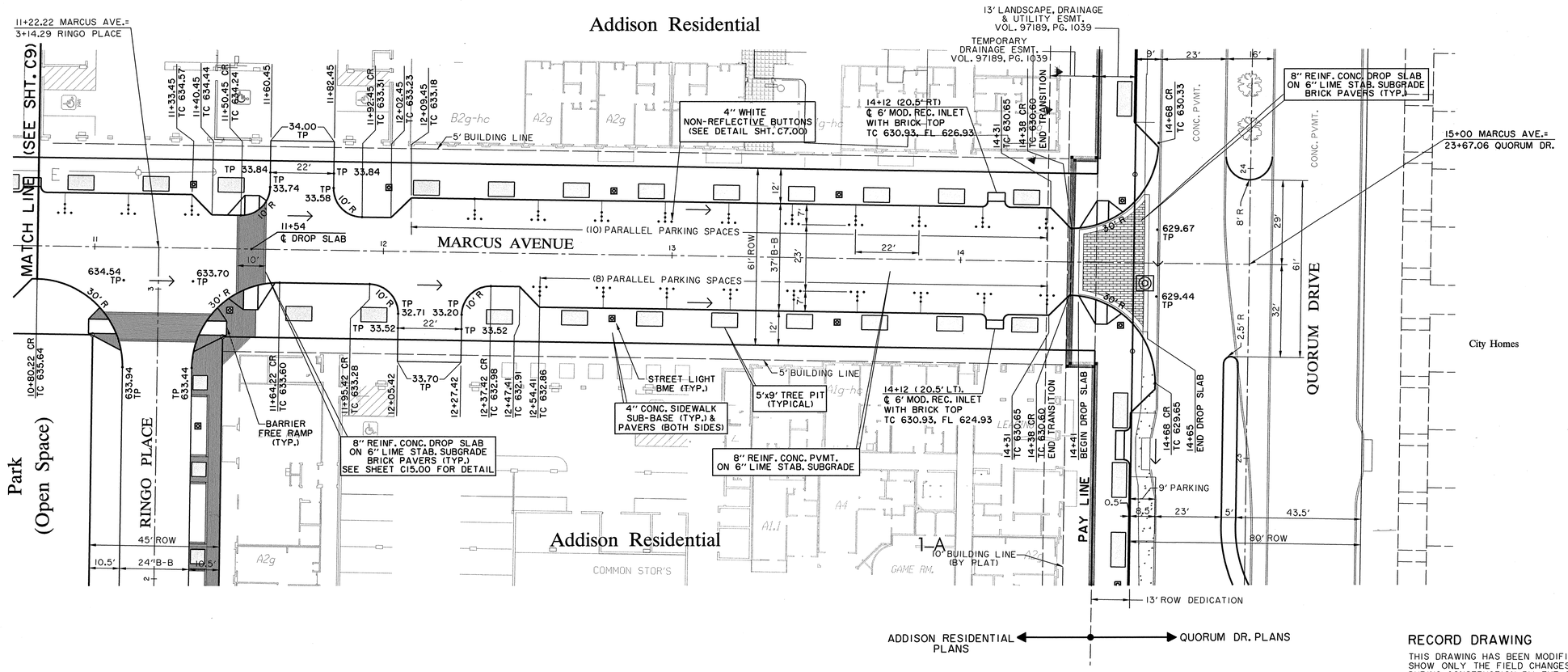

RECORD DRAWING

THIS DRAWING HAS BEEN MODIFIED FROM THE ORIGINAL TO SHOW ONLY THE FIELD CHANGES AND ADJUSTMENTS MADE DURING CONSTRUCTION BY THE CONTRACTOR WHICH WERE DOCUMENTED AND FURNISHED TO THE ENGINEER FOR THE PURPOSE OF PREPARING THESE RECORD DRAWINGS. FIELD INSPECTION OF CONSTRUCTION WAS PERFORMED BY OTHERS. TO THE BEST OF OUR KNOWLEDGE AND UNDERSTANDING THESE RECORD DRAWINGS REPRESENT THE "AS-BUILT" CONDITIONS.

STATE OF TEXAS
KEVIN N. CARLSON
89232
REGISTERED PROFESSIONAL ENGINEER
1-9-09

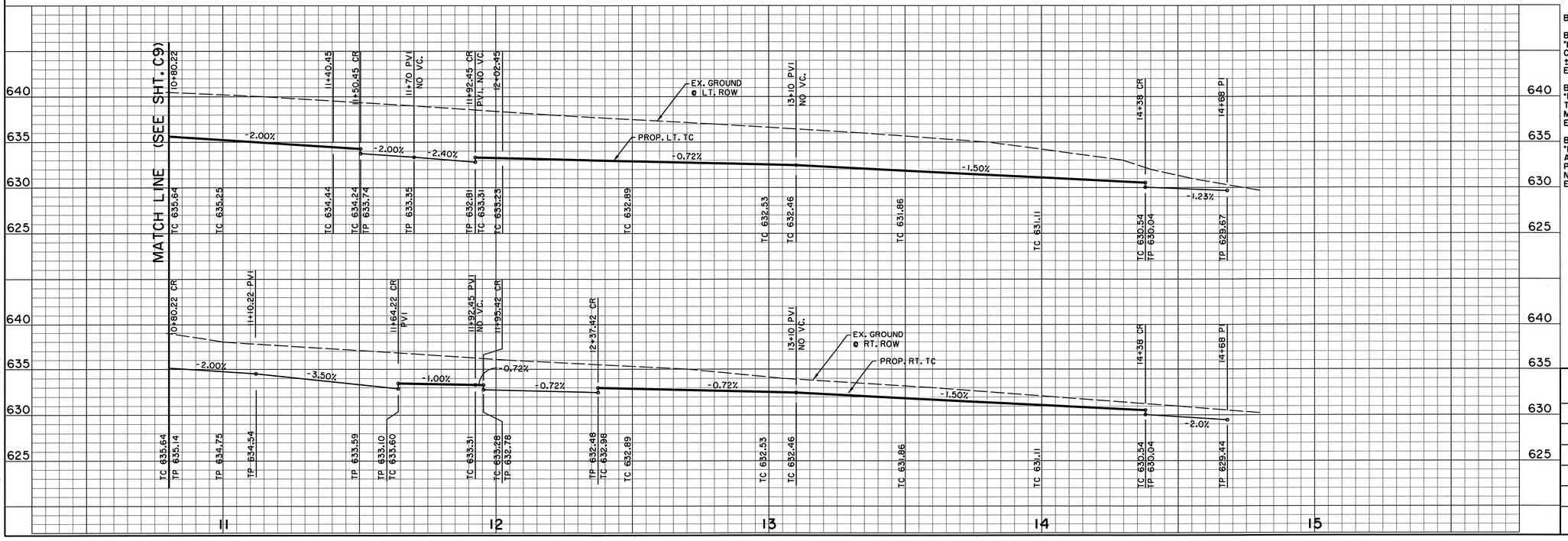

BENCHMARKS:

BM#5
"□" CUT ON 8' INLET ON NORTH CURB LINE OF GOODMAN AVE. ±75' EAST OF PASCHAL PLACE. ELEV. 629.98

BM#6
"□" CUT AT ℄ OF 8' INLET AT THE SOUTHWEST CORNER OF MORRIS AVE. AND WITT PLACE. ELEV. 627.29

BM#7
"□" CUT AT WEST CORNER OF ADDISON THEATRE CENTRE PARKING LOT, SECOND ENTRANCE NORTH OF ADDISON RD. ELEV. 637.66

PAVING PLAN & PROFILE
MARCUS AVENUE
ADDISON RESIDENTIAL
TOWN OF ADDISON, TEXAS

Huitt - Zollars, Inc.
3131 Mckinney Ave., Suite 600, Dallas, TX 75204
Phone (214) 871-3311/Fax (214) 871-0757

DESIGN	CHECKED	APPR.	SCALE	DATE	PROJECT NO.	NO.
HZI	HZI	DEM	H: 1"=20' V: 1"=6'	11/20/08		C8

h:\proj\01340801\dgn\3629PV01.DGN

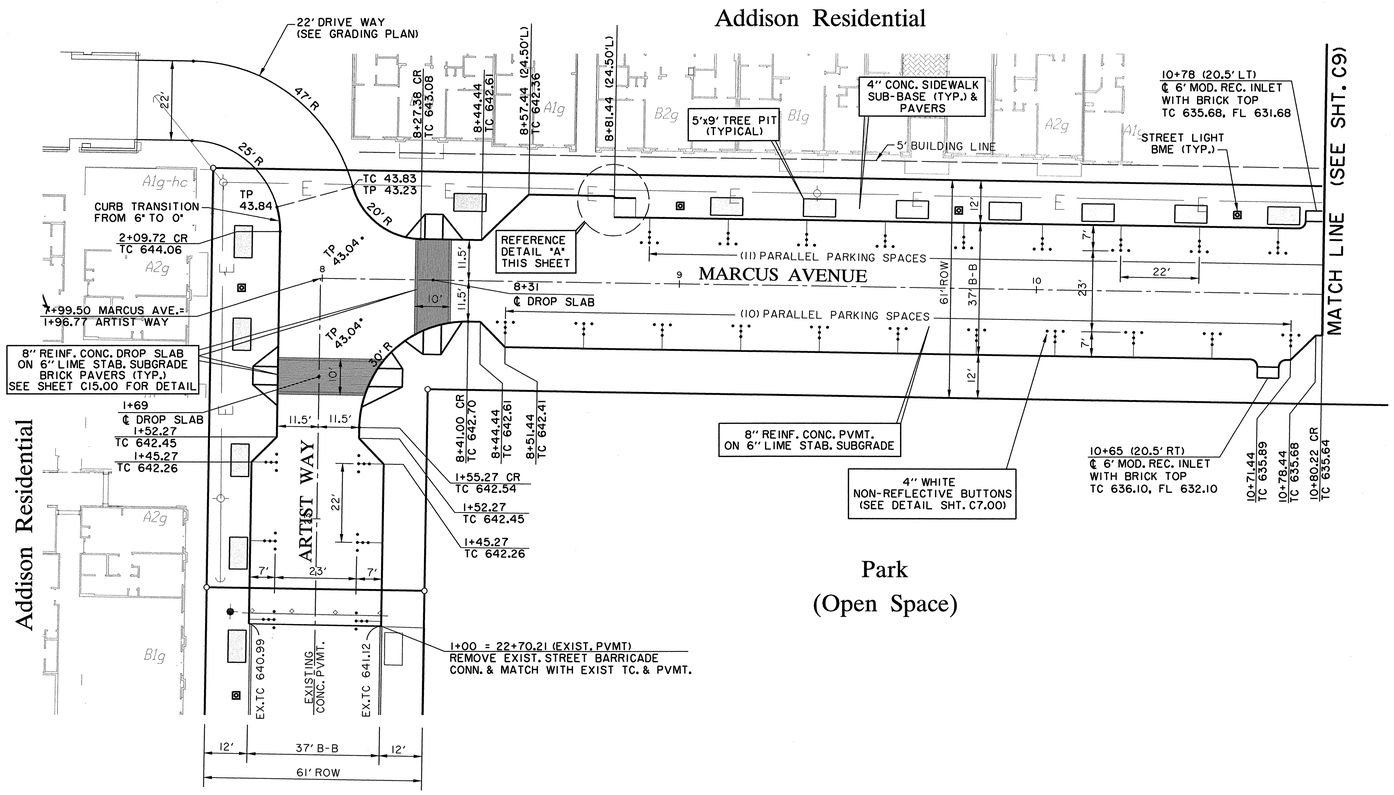

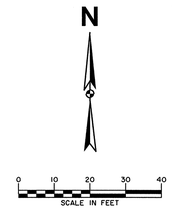

SCALE: 1" = 20'

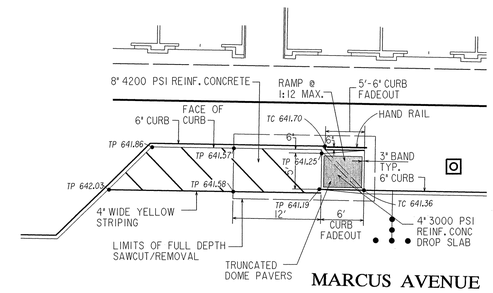

DETAIL "A"
MODIFIED RAMP
NOT TO SCALE

RECORD DRAWING

THIS DRAWING HAS BEEN MODIFIED FROM THE ORIGINAL TO SHOW ONLY THE FIELD CHANGES AND ADJUSTMENTS MADE DURING CONSTRUCTION BY THE CONTRACTOR WHICH WERE DOCUMENTED AND FURNISHED TO THE ENGINEER FOR THE PURPOSE OF PREPARING THESE RECORD DRAWINGS. FIELD INSPECTION OF CONSTRUCTION WAS PERFORMED BY OTHERS. TO THE BEST OF OUR KNOWLEDGE AND UNDERSTANDING THESE RECORD DRAWINGS REPRESENT THE "AS-BUILT" CONDITIONS.

STATE OF TEXAS
KEVIN N. CARLSON
89232
REGISTERED PROFESSIONAL ENGINEER
1-9-09

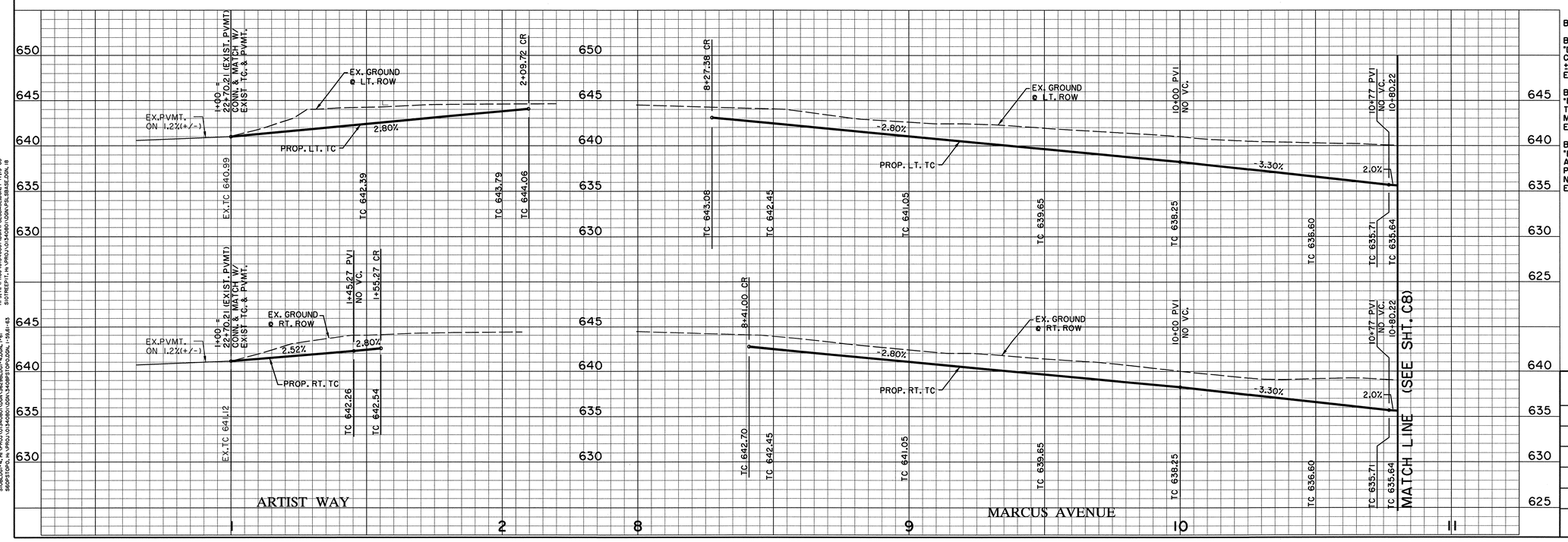

BENCHMARKS:

BM#5
"□" CUT ON 8' INLET ON NORTH CURB LINE OF GOODMAN AVE. ±75' EAST OF PASCHAL PLACE.
ELEV. 629.98

BM#6
"□" CUT AT ℄ OF 8' INLET AT THE SOUTHWEST CORNER OF MORRIS AVE. AND WITT PLACE.
ELEV. 627.29

BM#7
"□" CUT AT WEST CORNER OF ADDISON THEATRE CENTRE PARKING LOT, SECOND ENTRANCE NORTH OF ADDISON RD.
ELEV. 637.66

PAVING PLAN & PROFILE
MARCUS AVENUE

ADDISON RESIDENTIAL

TOWN OF ADDISON, TEXAS

Huitt - Zollars, Inc.
3131 Mckinney Ave., Suite 600, Dallas, TX 75204
Phone (214) 871-3311/Fax (214) 871-0757

DESIGN	CHECKED	APPR.	SCALE	DATE	PROJECT NO.	NO.
HZI	HZI	DEM	H: 1"=20' V: 1"=6'	11/20/08		C9

h:\proj\0134080\1\dgn\3629PV02.DGN

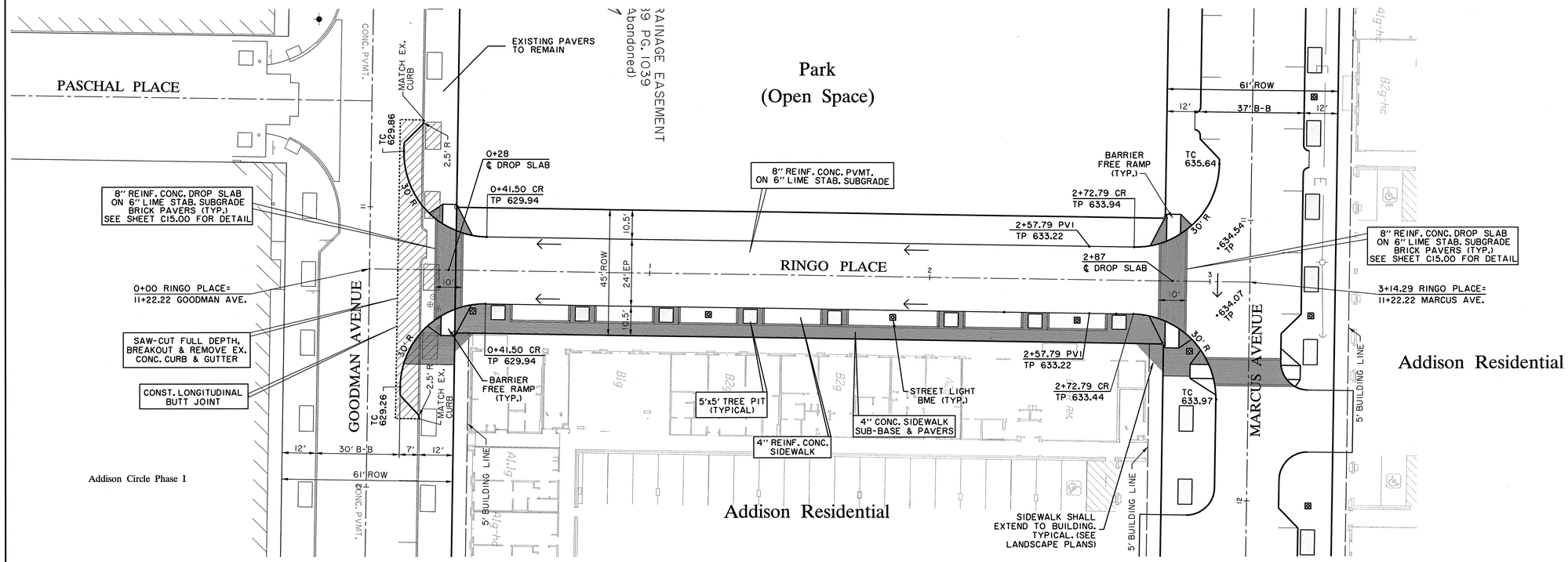

SCALE: 1" = 20'

RECORD DRAWING

THIS DRAWING HAS BEEN MODIFIED FROM THE ORIGINAL TO SHOW ONLY THE FIELD CHANGES AND ADJUSTMENTS MADE DURING CONSTRUCTION BY THE CONTRACTOR WHICH WERE DOCUMENTED AND FURNISHED TO THE ENGINEER FOR THE PURPOSE OF PREPARING THESE RECORD DRAWINGS. FIELD INSPECTION OF CONSTRUCTION WAS PERFORMED BY OTHERS. TO THE BEST OF OUR KNOWLEDGE AND UNDERSTANDING THESE RECORD DRAWINGS REPRESENT THE "AS-BUILT" CONDITIONS.

STATE OF TEXAS
KEVIN N. CARLSON
89232
REGISTERED PROFESSIONAL ENGINEER
1-9-09

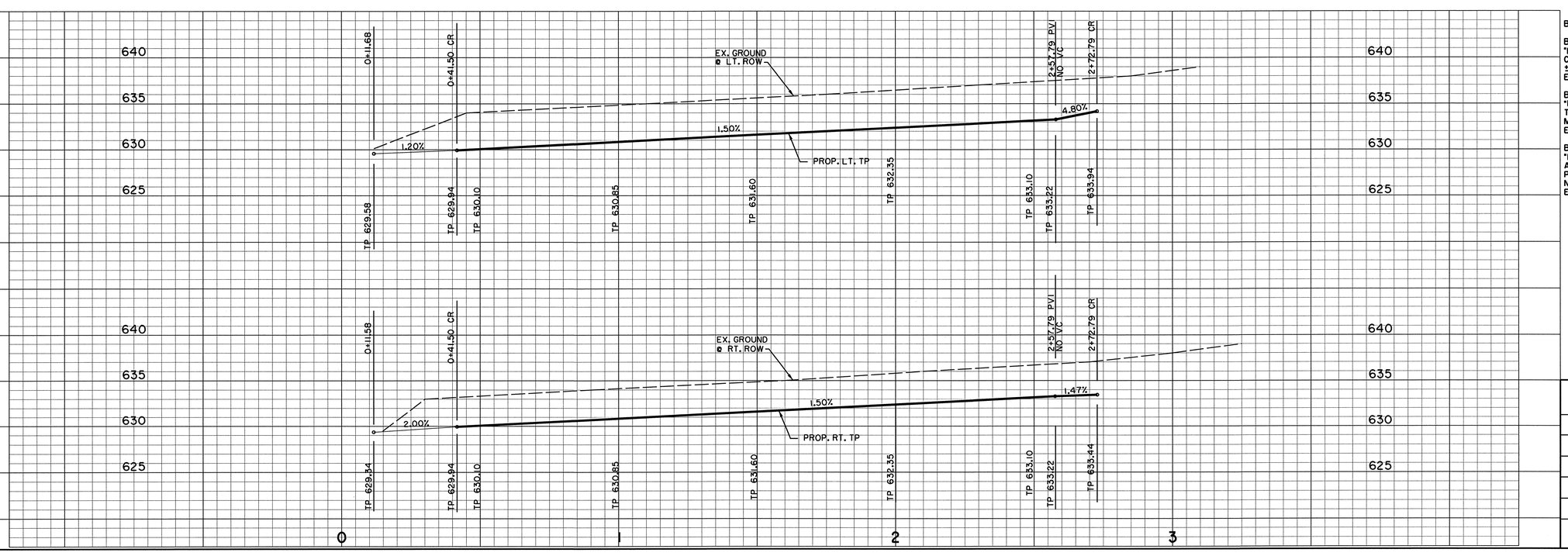

BENCHMARKS:

BM#5
"□" CUT ON 8' INLET ON NORTH CURB LINE OF GOODMAN AVE. ±75' EAST OF PASCHAL PLACE.
ELEV. 629.98

BM#6
"□" CUT AT ℄ OF 8' INLET AT THE SOUTHWEST CORNER OF MORRIS AVE. AND WITT PLACE.
ELEV. 627.29

BM#7
"□" CUT AT WEST CORNER OF ADDISON THEATRE CENTRE PARKING LOT, SECOND ENTRANCE NORTH OF ADDISON RD.
ELEV. 637.66

PAVING PLAN & PROFILE
RINGO PLACE
ADDISON RESIDENTIAL
TOWN OF ADDISON, TEXAS

Huitt - Zollars, Inc.
3131 Mckinney Ave., Suite 600, Dallas, TX 75204
Phone (214) 871-3311/Fax (214) 871-0757

DESIGN	CHECKED	APPR.	SCALE	DATE	PROJECT NO.	NO.
HZI	HZI	DEM	H: 1"=20' V: 1"=6'	11/20/08		C10

h:\proj\013408001\dgn\3629PV03.DGN

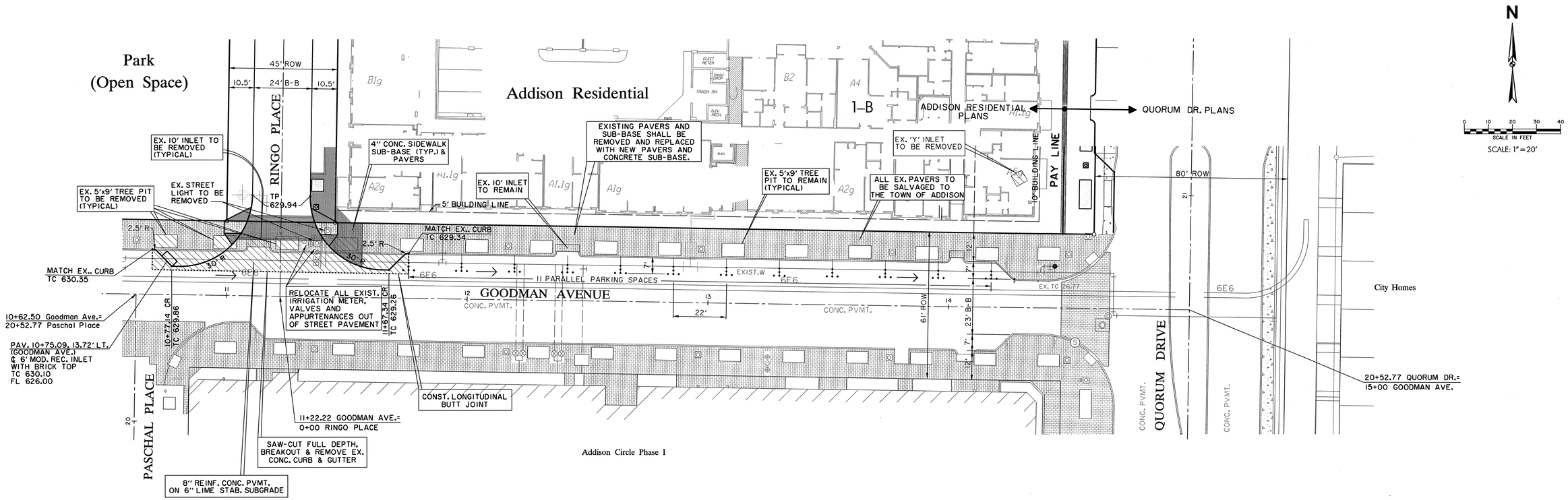

Addison Circle Phase I

BENCHMARKS:

BM#5
"□" CUT ON 8' INLET ON NORTH CURB LINE OF GOODMAN AVE. ±75' EAST OF PASCHAL PLACE. ELEV. 629.98

BM#6
"□" CUT AT ℄ OF 8' INLET AT THE SOUTHWEST CORNER OF MORRIS AVE. AND WITT PLACE. ELEV. 627.29

BM#7
"□" CUT AT WEST CORNER OF ADDISON THEATRE CENTRE PARKING LOT, SECOND ENTRANCE NORTH OF ADDISON RD. ELEV. 637.66

RECORD DRAWING

THIS DRAWING HAS BEEN MODIFIED FROM THE ORIGINAL TO SHOW ONLY THE FIELD CHANGES AND ADJUSTMENTS MADE DURING CONSTRUCTION BY THE CONTRACTOR WHICH WERE DOCUMENTED AND FURNISHED TO THE ENGINEER FOR THE PURPOSE OF PREPARING THESE RECORD DRAWINGS. FIELD INSPECTION OF CONSTRUCTION WAS PERFORMED BY OTHERS. TO THE BEST OF OUR KNOWLEDGE AND UNDERSTANDING THESE RECORD DRAWINGS REPRESENT THE "AS-BUILT" CONDITIONS.

STATE OF TEXAS
KEVIN N. CARLSON
89232
REGISTERED PROFESSIONAL ENGINEER
1-9-09

PAVING PLAN
GOODMAN AVENUE
ADDISON RESIDENTIAL
TOWN OF ADDISON, TEXAS

Huitt - Zollars, Inc.
3131 Mckinney Ave., Suite 600, Dallas, TX 75204
Phone (214) 871-3311/Fax (214) 871-0757

DESIGN	CHECKED	APPR.	SCALE	DATE	PROJECT NO.	NO.
HZI	HZI	DEM	H: 1"=20' V: 1"=6'	11/20/08		C11

h:\proj\0134080\dgn\3629PV04.DGN

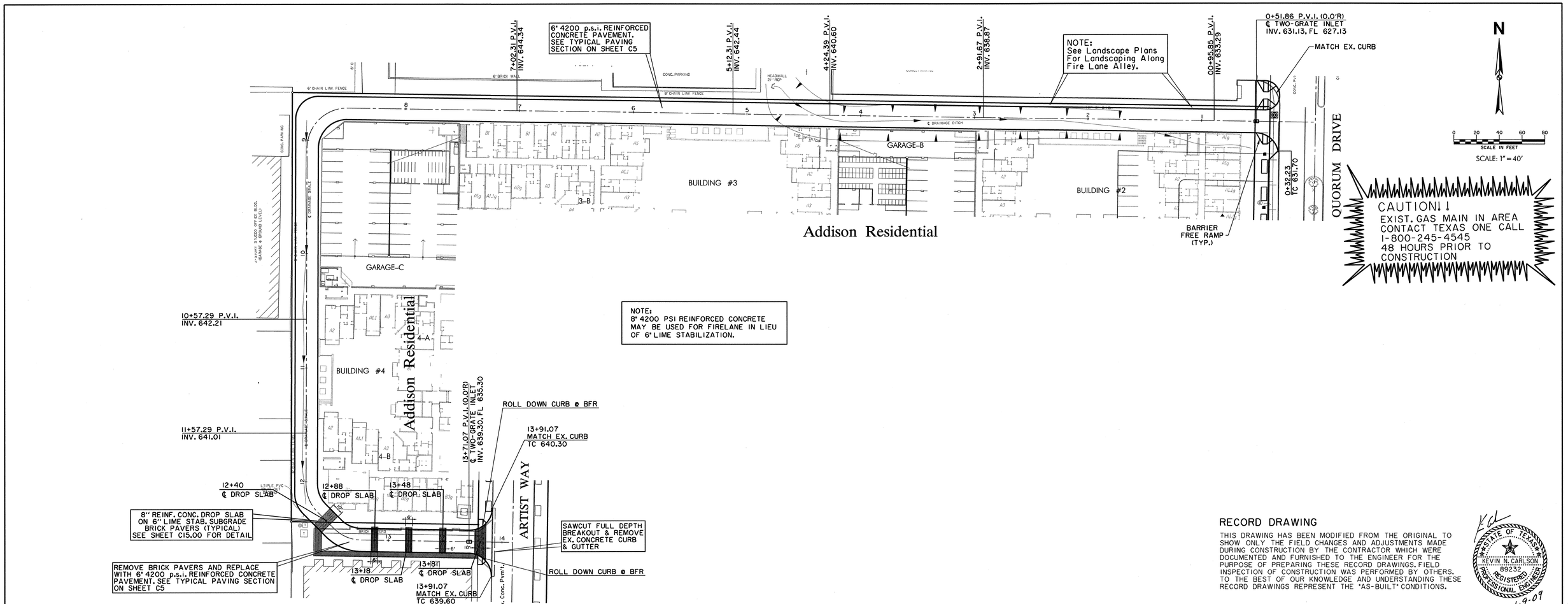

RECORD DRAWING

THIS DRAWING HAS BEEN MODIFIED FROM THE ORIGINAL TO SHOW ONLY THE FIELD CHANGES AND ADJUSTMENTS MADE DURING CONSTRUCTION BY THE CONTRACTOR WHICH WERE DOCUMENTED AND FURNISHED TO THE ENGINEER FOR THE PURPOSE OF PREPARING THESE RECORD DRAWINGS. FIELD INSPECTION OF CONSTRUCTION WAS PERFORMED BY OTHERS. TO THE BEST OF OUR KNOWLEDGE AND UNDERSTANDING THESE RECORD DRAWINGS REPRESENT THE "AS-BUILT" CONDITIONS.

STATE OF TEXAS
KEVIN N. CARLSON
89232
REGISTERED PROFESSIONAL ENGINEER
1-9-09

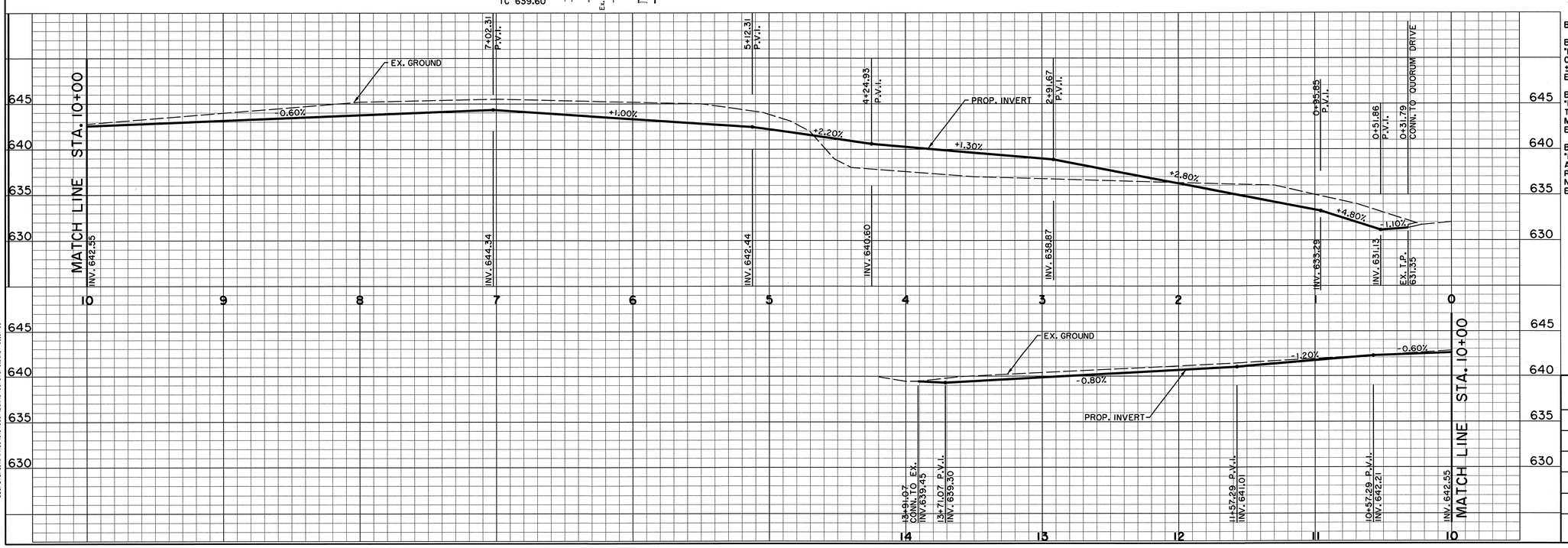

BENCHMARKS:

BM#5
"□" CUT ON 8' INLET ON NORTH CURB LINE OF GOODMAN AVE. ±75' EAST OF PASCHAL PLACE.
ELEV. 629.98

BM#6
"□" CUT AT ℄ OF 8' INLET AT THE SOUTHWEST CORNER OF MORRIS AVE. AND WITT PLACE.
ELEV. 627.29

BM#7
"□" CUT AT WEST CORNER OF ADDISON THEATRE CENTRE PARKING LOT, SECOND ENTRANCE NORTH OF ADDISON RD.
ELEV. 637.66

PAVING PLAN & PROFILE
20' FIRE LANE

ADDISON RESIDENTIAL

TOWN OF ADDISON, TEXAS

Huitt - Zollars, Inc.
3131 Mckinney Ave., Suite 600, Dallas, TX 75204
Phone (214) 871-3311/Fax (214) 871-0757

DESIGN	CHECKED	APPR.	SCALE	DATE	PROJECT NO.	NO.
HZI	HZI	DEM	H: 1"=40' V: 1"=6'	11/20/08		C12

h:\proj\0134080\dgn\3629PV05.DGN

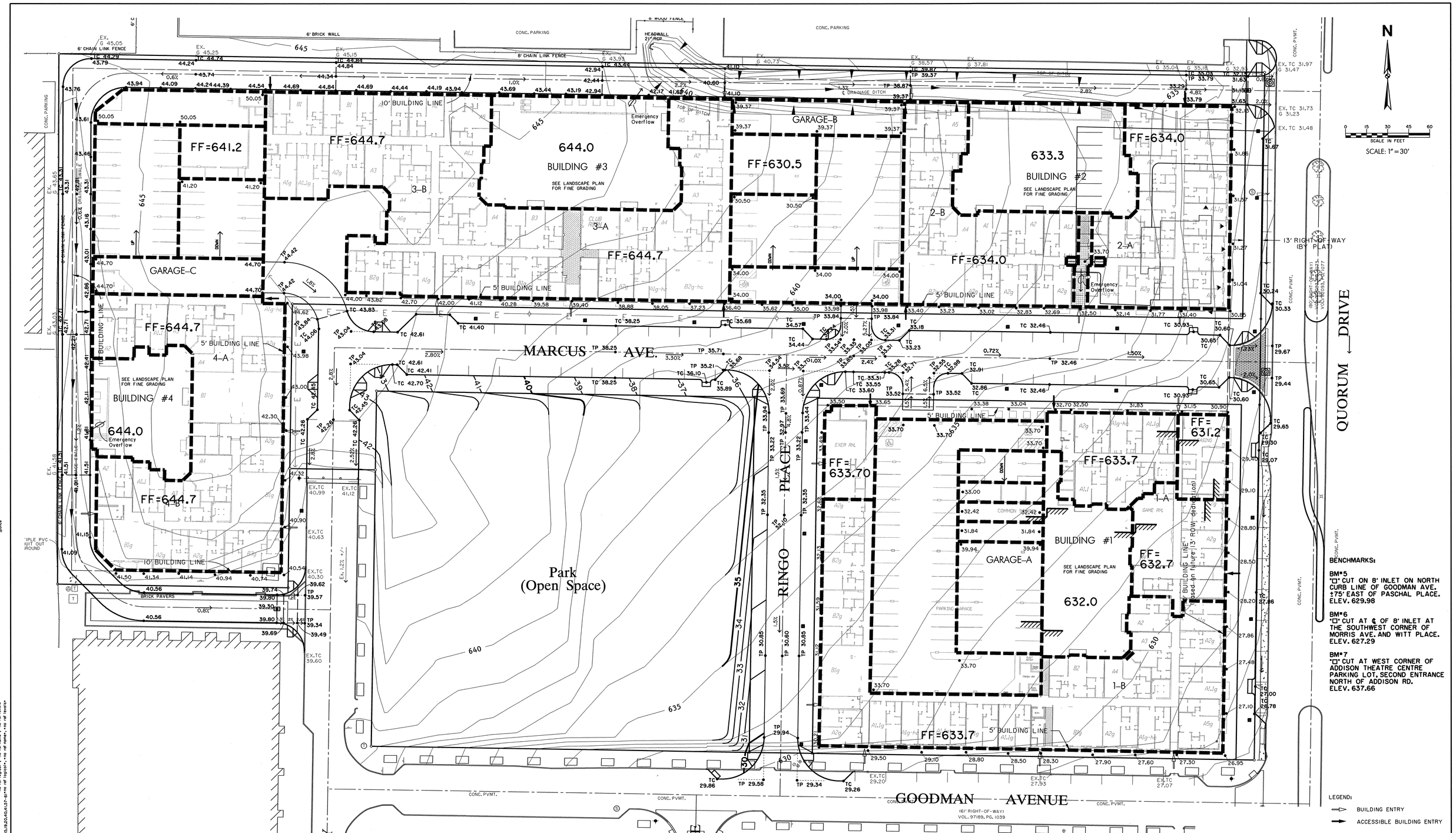

RECORD DRAWING

THIS DRAWING HAS BEEN MODIFIED FROM THE ORIGINAL TO SHOW ONLY THE FIELD CHANGES AND ADJUSTMENTS MADE DURING CONSTRUCTION BY THE CONTRACTOR WHICH WERE DOCUMENTED AND FURNISHED TO THE ENGINEER FOR THE PURPOSE OF PREPARING THESE RECORD DRAWINGS. FIELD INSPECTION OF CONSTRUCTION WAS PERFORMED BY OTHERS. TO THE BEST OF OUR KNOWLEDGE AND UNDERSTANDING THESE RECORD DRAWINGS REPRESENT THE "AS-BUILT" CONDITIONS.

STATE OF TEXAS
KEVIN N. CARLSON
89232
REGISTERED PROFESSIONAL ENGINEER
1-9-09

ROUGH GRADING PLAN

ADDISON RESIDENTIAL

TOWN OF ADDISON, TEXAS

Huitt - Zollars, Inc.
3131 Mckinney Ave., Suite 600, Dallas, TX 75204
Phone (214) 871-3311/Fax (214) 871-0757

DESIGN	CHECKED	APPR.	SCALE	DATE	PROJECT NO.	NO.
HZI	HZI	DEM	1"=30'	11/20/08		C13

h:\proj\0134080l\dgn\3629GR01.DGN

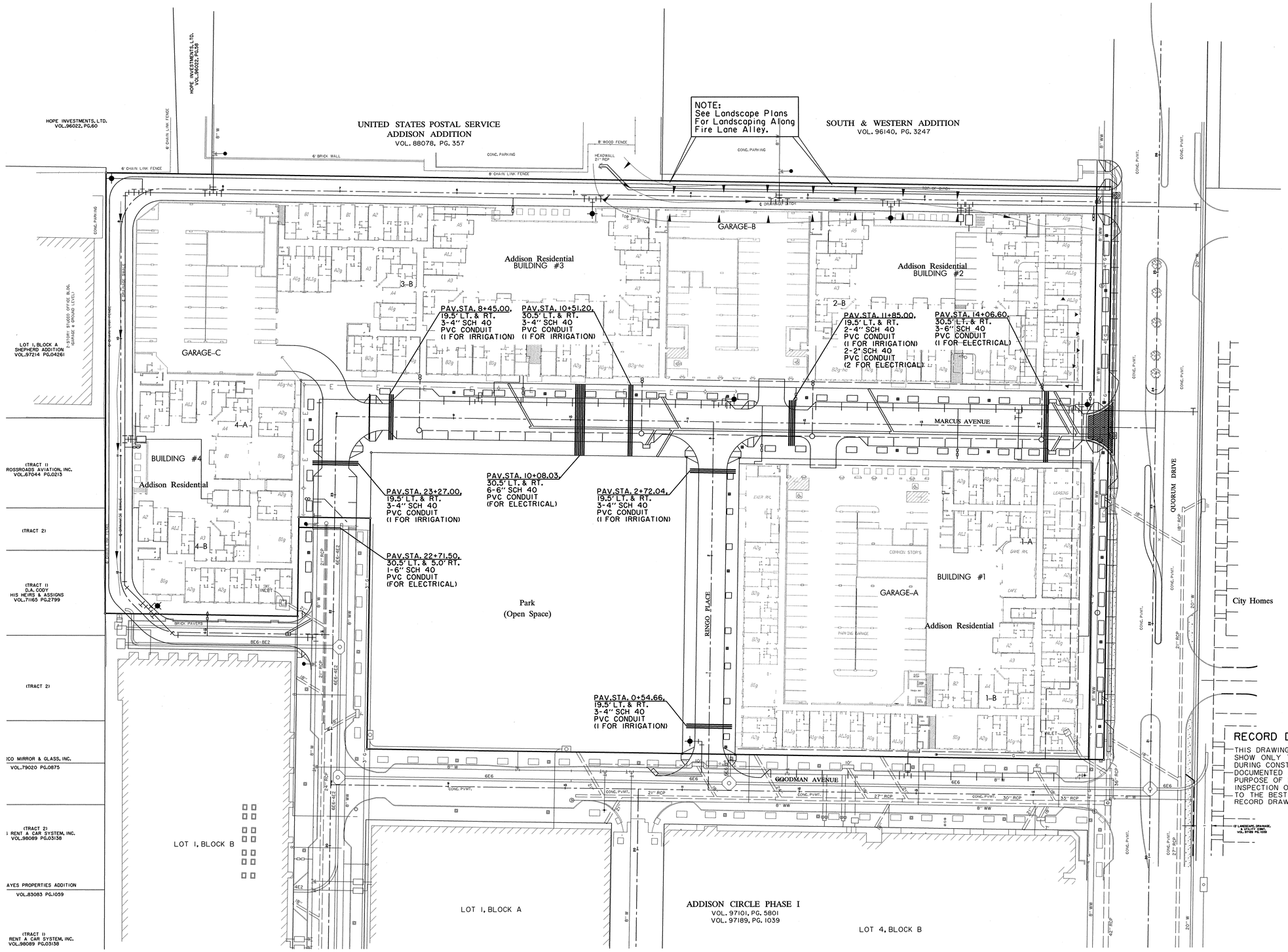

NOTE:
CONTRACTOR SHALL CONTACT ALL UTILITIES AND PRIVATE APARTMENT DEVELOPER TO INSURE THAT ALL NECESSARY SLEEVES ARE INSTALLED PRIOR TO PAVING.

NOTE:
MINIMUM COVER OF CONDUIT SLEEVES SHALL BE 2.5' FROM TOP OF CURB.

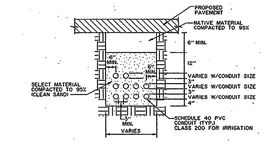

TYPICAL CONDUIT/SLEEVE EMBEDMENT

N.T.S.

BENCHMARKS:

BM#5
"□" CUT ON 8' INLET ON NORTH CURB LINE OF GOODMAN AVE. ±75' EAST OF PASCHAL PLACE. ELEV. 629.98

BM#6
"□" CUT AT ℄ OF 8' INLET AT THE SOUTHWEST CORNER OF MORRIS AVE. AND WITT PLACE. ELEV. 627.29

BM#7
"□" CUT AT WEST CORNER OF ADDISON THEATRE CENTRE PARKING LOT, SECOND ENTRANCE NORTH OF ADDISON RD. ELEV. 637.66

RECORD DRAWING

THIS DRAWING HAS BEEN MODIFIED FROM THE ORIGINAL TO SHOW ONLY THE FIELD CHANGES AND ADJUSTMENTS MADE DURING CONSTRUCTION BY THE CONTRACTOR WHICH WERE DOCUMENTED AND FURNISHED TO THE ENGINEER FOR THE PURPOSE OF PREPARING THESE RECORD DRAWINGS. FIELD INSPECTION OF CONSTRUCTION WAS PERFORMED BY OTHERS. TO THE BEST OF OUR KNOWLEDGE AND UNDERSTANDING THESE RECORD DRAWINGS REPRESENT THE "AS-BUILT" CONDITIONS.

STATE OF TEXAS
KEVIN N. CARLSON
89232
REGISTERED PROFESSIONAL ENGINEER
1-9-09

SLEEVING PLAN

ADDISON RESIDENTIAL

TOWN OF ADDISON, TEXAS

Huitt - Zollars, Inc.
3131 Mckinney Ave., Suite 600, Dallas, TX 75204
Phone (214) 871-3311/Fax (214) 871-0757

DESIGN	CHECKED	APPR.	SCALE	DATE	PROJECT NO.	NO.
HZI	HZI	DEM	1"=40'	11/20/08		C14

h:\proj\0134080\dgn\3629SV01.DGN

NOTES-PAVING AND GRADING

1. UNLESS SPECIFICALLY STATED OTHERWISE IN PLANS OR CONTRACT DOCUMENTS, THE CONTROLLING SPECIFICATIONS FOR ALL WORK WITHIN PUBLIC RIGHTS-OF-WAY AND EASEMENTS SHALL BE THE STANDARD SPECIFICATIONS FOR PUBLIC WORKS CONSTRUCTION, 4th EDITION OCT. 2004, AS AMENDED BY THE NORTH CENTRAL TEXAS COUNCIL OF GOVERNMENTS ("STANDARD SPECIFICATIONS"). COPIES OF THE STANDARD SPECIFICATIONS MAY BE PURCHASED BY MAIL OR OVER THE COUNTER FROM THE NORTH CENTRAL TEXAS COUNCIL OF GOVERNMENTS, 616 SIX FLAGS DRIVE, P.O. BOX DRAWER COG, ARLINGTON, TEXAS 76005-5888, PHONE METRO 817/640-3300. BULK DISCOUNTS ARE AVAILABLE. THIS DOCUMENT IS COPYRIGHTED.
2. THE PAVING AREAS WILL BE GRADED TO +/- .10' OF FINISHED SUBGRADE ELEVATIONS. SIDEWALK AREAS WILL BE GRADED TO +/- .10' OF FINISHED PAVEMENT ELEVATION.
3. ALL TRAFFIC CONTROL NECESSARY FOR THE WORK SHALL BE PROVIDED BY THE SUCCESSFUL CONTRACTOR. ALL BARRICADES, WARNING SIGNS, LIGHTS, DEVICES, ETC. FOR THE GUIDANCE AND PROTECTION OF TRAFFIC AND PEDESTRIANS MUST CONFORM TO THE INSTALLATIONS SHOWN IN THE LATEST ISSUE OF THE "TEXAS MANUAL ON UNIFORM TRAFFIC CONTROL DEVICES FOR STREETS AND HIGHWAYS (MUTCD)", AS CURRENTLY AMENDED, TEXAS DEPARTMENT OF TRANSPORTATION.
4. ALL FILL SHALL BE PLACED IN MAXIMUM 8-INCH LIFTS COMPACTED TO 95% OF STANDARD PROCTOR DENSITY BETWEEN 0% AND +3% OF OPTIMUM MOISTURE CONTENT.
5. ALL TREES, STUMPS, BRUSH, GRASSES AND SURFACE ORGANICS WITHIN PROPOSED RIGHT-OF-WAY ARE TO REMOVED AND PROPERLY DISPOSED OF OFF-SITE. TREE REMOVAL PERMITS, IF REQUIRED, WILL BE OBTAINED BY THE OWNER.
6. EXISTING UTILITY POLES, IF ANY, WILL BE REMOVED OR RELOCATED BY THE UTILITY COMPANIES THROUGH COORDINATION BY THE OWNER. CONTRACTOR SHALL BRING TO THE OWNER'S ATTENTION ANY FACILITIES THAT APPEAR TO BE IN CONFLICT SO THAT THE OWNER HAS SUFFICIENT TIME TO ACCOMPLISH THE NECESSARY RELOCATIONS.
7. WHERE DEEP VERTICAL EXCAVATIONS (IN EXCESS OF 3 FEET) ARE INDICATED, CUTS SHALL BE LAID BACK AT A STABLE SLOPE (ON OWNER'S PROPERTY). BACKFILL MATERIAL SHALL BE STOCKPILED ON-SITE AT THE DIRECTION OF THE OWNER.
8. ALL REINFORCING STEEL AND DOWEL BARS IN PAVEMENT SHALL BE SUPPORTED AND MAINTAINED AT THE CORRECT CLEARANCES BY THE USE OF BAR CHAIRS OR OTHER APPROVED SUPPORT. INSERTION OF RE-BAR INTO "GREEN" CONCRETE IS PROHIBITED.
9. THE USE OF WOOD FORMS FOR PAVEMENT CONSTRUCTION WILL BE PERMITTED.
10. BARRIER-FREE RAMPS WILL BE BUILT ON THIS PROJECT. LOCATIONS MAY BE ADJUSTED AS DIRECTED BY THE ENGINEER TO CLEAR OBSTRUCTIONS. ALL ADA FACILITIES MUST PASS ADA/TAS INSPECTION.
11. VARIABLE HEIGHT CURB AT INTERSECTIONS AND SLOPING CURBS AT DRIVES SHALL BE BUILT TO MATCH BARRIER-FREE RAMPS PER PLANS. NO SEPARATE PAY ITEMS ARE APPROVED.
12. TWO-WAY TRAFFIC MUST BE MAINTAINED AT ALL TIMES ON EXISTING PUBLIC STREETS ADJACENT TO THIS PROJECT UNLESS SPECIFIED OTHERWISE IN THE PLANS AND SPECIFICATIONS. THE TRAVELWAY WIDTH SHALL NOT BE LESS THAN 11 FEET.
13. SEE TYPICAL SECTIONS SHEET FOR ADDITIONAL MATERIAL SPECIFICATIONS.
14. ALL CURBS SHALL BE PLACED INTEGRAL WITH PAVEMENT.
15. CURBS SHALL MEET THE SAME COMPRESSIVE STRENGTH AS SPECIFIED FOR THE CONCRETE PAVEMENT.
16. BAR LAPS SHALL BE 30 DIAMETERS.
17. FINISH SHALL BE LONGITUDINAL MEDIUM BROOM.
18. SEE SURFACE PATTERNING PLANS FOR BRICK AND SIDEWALK PATTERNS. POUR SIDEWALK AROUND NOTED LEAVEOUTS PER LOCATIONS ON SURFACE PATTERNING PLANS.

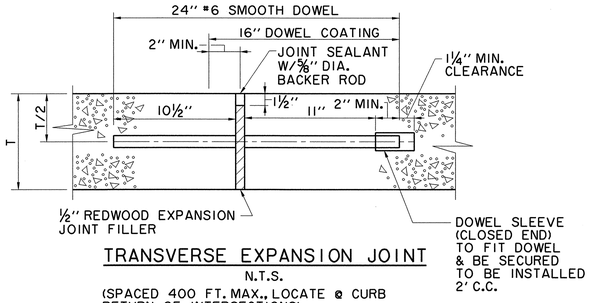

TRANSVERSE EXPANSION JOINT

N.T.S.

(SPACED 400 FT. MAX., LOCATE @ CURB RETURN OF INTERSECTIONS)
NOTE:
DOWELS & REINF. BARS SHALL BE SUPPORTED BY AN APPROVED DEVICE.

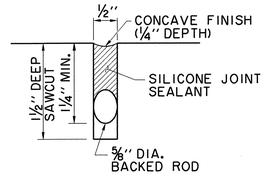

TYPICAL CONSTRUCTION JOINT DETAIL (8" PAVEMENT)

N.T.S.

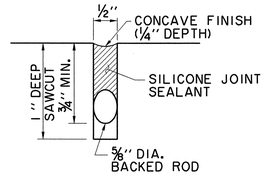

TYPICAL CONSTRUCTION JOINT DETAIL (6" PAVEMENT)

N.T.S.

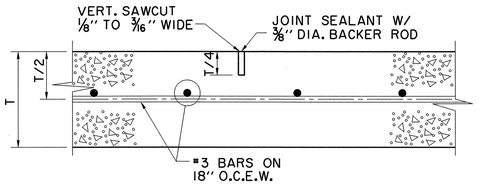

SAWED DUMMY JOINT

N.T.S.

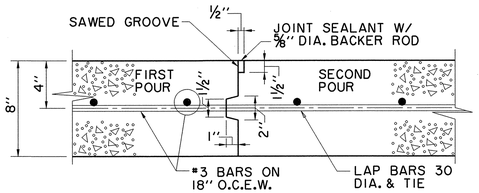

CONSTRUCTION JOINT FOR 8" PAVEMENT

N.T.S.

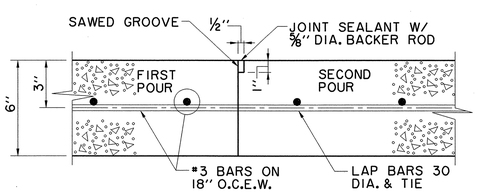

CONSTRUCTION JOINT FOR 6" PAVEMENT

N.T.S.

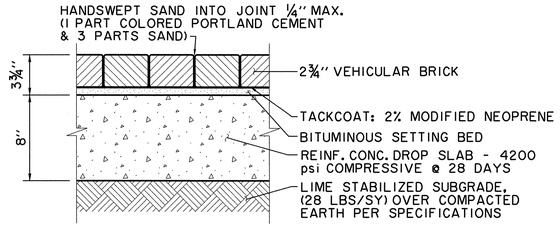

VEHICULAR BRICK INSTALLATION IN VEHICULAR AREAS

N.T.S.

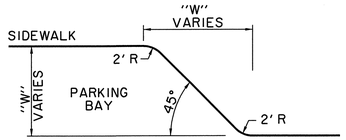

PARKING TRANSITION DETAIL

N.T.S.

BRICK TYPES:

VEHICULAR BRICK 'C' - 2⅝" x 3½" x 7½" ACME (EUREKA-240 RED)

PEDESTRIAN BRICK 'A' - 2⅝" x 3½" x 7½" ACME (EUREKA-231 BLEND)

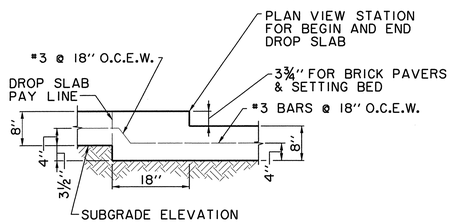

LONGITUDINAL SECTION AT DROP SLAB IN STREET

N.T.S.

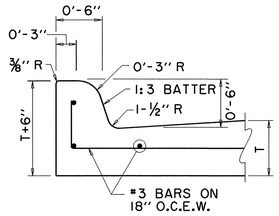

INTEGRAL CURB AND GUTTER

N.T.S.

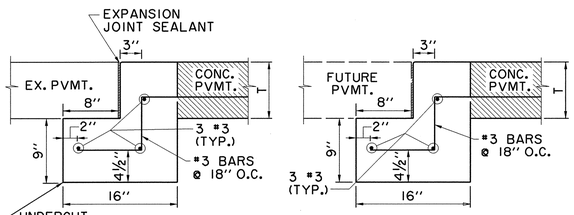

PVMT. BARS TO BE BENT DOWN INTO HEADER.
HEADER & PVMT. TO BE MONOLITHIC.

STREET HEADER

N.T.S.

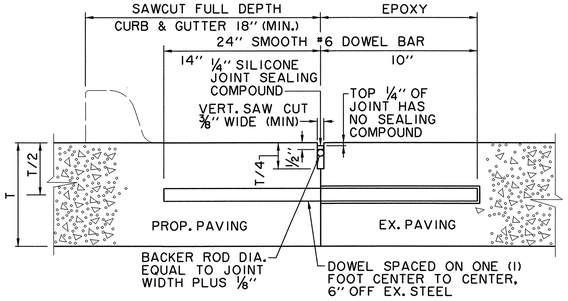

DOWEL BARS SHALL BE DRILLED INTO EX. PVMT. HORIZONTALLY BY USE OF A MECHANICAL RIG. DRILLING BY HAND IS NOT ACCEPTABLE, PUSHING DOWEL BARS INTO GREEN CONC. NOT ACCEPTABLE.

LONGITUDINAL BUTT JOINT

N.T.S.

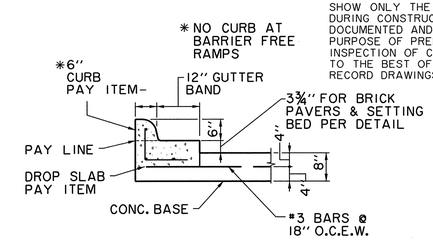

SECTION THRU CURB AT DROP SLAB

N.T.S.

RECORD DRAWING

THIS DRAWING HAS BEEN MODIFIED FROM THE ORIGINAL TO SHOW ONLY THE FIELD CHANGES AND ADJUSTMENTS MADE DURING CONSTRUCTION BY THE CONTRACTOR WHICH WERE DOCUMENTED AND FURNISHED TO THE ENGINEER FOR THE PURPOSE OF PREPARING THESE RECORD DRAWINGS. FIELD INSPECTION OF CONSTRUCTION WAS PERFORMED BY OTHERS. TO THE BEST OF OUR KNOWLEDGE AND UNDERSTANDING THESE RECORD DRAWINGS REPRESENT THE "AS-BUILT" CONDITIONS.

STATE OF TEXAS
KEVIN N. CARLSON
89232
REGISTERED
PROFESSIONAL ENGINEER
1-9-09

PAVING DETAILS						
ADDISON RESIDENTIAL						
TOWN OF ADDISON, TEXAS						
Huitt - Zollars, Inc. 3131 Mckinney Ave., Suite 600, Dallas, TX 75204 Phone (214) 871-3311/Fax (214) 871-0757						
DESIGN	CHECKED	APPR.	SCALE	DATE	PROJECT NO.	NO.
HZI	HZI		N.T.S.	11/20/08		C15

h:\proj\0134080l\dgn\3629PVDET.DGN

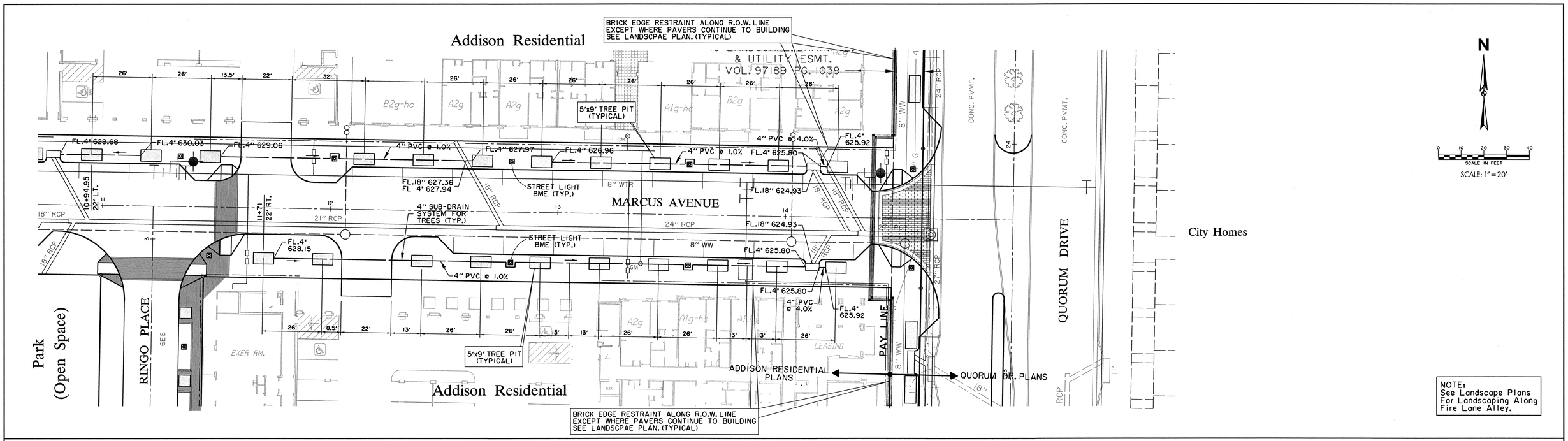

NOTE:
See Landscape Plans For Landscaping Along Fire Lane Alley.

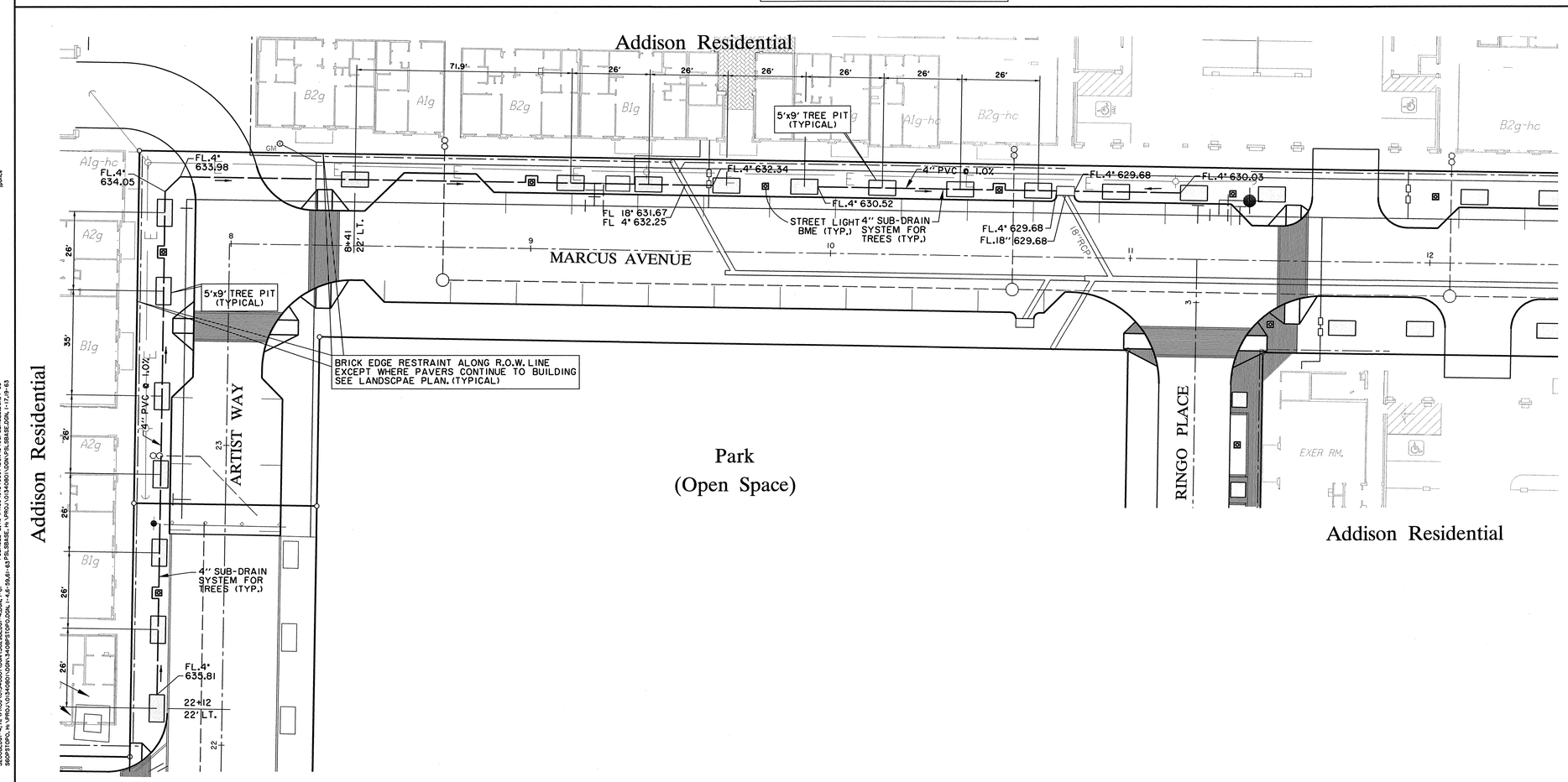

BENCHMARKS:

BM#5
"□" CUT ON 8' INLET ON NORTH CURB LINE OF GOODMAN AVE. ±75' EAST OF PASCHAL PLACE.
ELEV. 629.98

BM#6
"□" CUT AT ℄ OF 8' INLET AT THE SOUTHWEST CORNER OF MORRIS AVE. AND WITT PLACE.
ELEV. 627.29

BM#7
"□" CUT AT WEST CORNER OF ADDISON THEATRE CENTRE PARKING LOT, SECOND ENTRANCE NORTH OF ADDISON RD.
ELEV. 637.66

RECORD DRAWING

THIS DRAWING HAS BEEN MODIFIED FROM THE ORIGINAL TO SHOW ONLY THE FIELD CHANGES AND ADJUSTMENTS MADE DURING CONSTRUCTION BY THE CONTRACTOR WHICH WERE DOCUMENTED AND FURNISHED TO THE ENGINEER FOR THE PURPOSE OF PREPARING THESE RECORD DRAWINGS. FIELD INSPECTION OF CONSTRUCTION WAS PERFORMED BY OTHERS. TO THE BEST OF OUR KNOWLEDGE AND UNDERSTANDING THESE RECORD DRAWINGS REPRESENT THE "AS-BUILT" CONDITIONS.

STATE OF TEXAS
KEVIN N. CARLSON
89232
REGISTERED PROFESSIONAL ENGINEER
1-9-09

STREETSCAPE PLAN
MARCUS AVENUE

ADDISON RESIDENTIAL

TOWN OF ADDISON, TEXAS

Huitt - Zollars, Inc.
3131 Mckinney Ave., Suite 600, Dallas, TX 75204
Phone (214) 871-3311/Fax (214) 871-0757

DESIGN	CHECKED	APPR.	SCALE	DATE	PROJECT NO.	NO.
HZI	HZI	DEM	1"=20'	11/20/08		C16

h:\proj\0134080\dgn\3629LS01.DGN

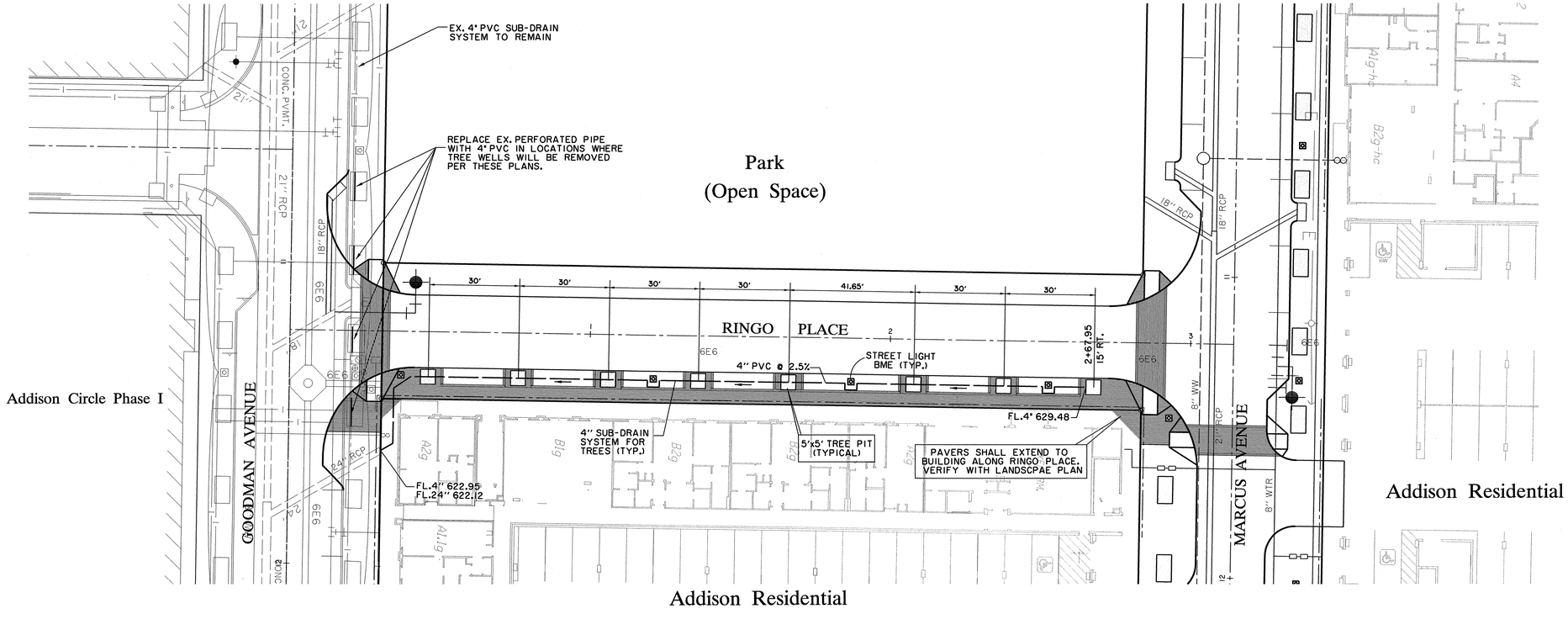

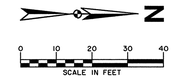

SCALE: 1" = 20'

NOTE:
See Landscape Plans For Landscaping Along Fire Lane Alley.

BENCHMARKS:

BM#5
"□" CUT ON 8' INLET ON NORTH CURB LINE OF GOODMAN AVE. ±75' EAST OF PASCHAL PLACE. ELEV. 629.98

BM#6
"□" CUT AT ℄ OF 8' INLET AT THE SOUTHWEST CORNER OF MORRIS AVE. AND WITT PLACE. ELEV. 627.29

BM#7
"□" CUT AT WEST CORNER OF ADDISON THEATRE CENTRE PARKING LOT, SECOND ENTRANCE NORTH OF ADDISON RD. ELEV. 637.66

RECORD DRAWING

THIS DRAWING HAS BEEN MODIFIED FROM THE ORIGINAL TO SHOW ONLY THE FIELD CHANGES AND ADJUSTMENTS MADE DURING CONSTRUCTION BY THE CONTRACTOR WHICH WERE DOCUMENTED AND FURNISHED TO THE ENGINEER FOR THE PURPOSE OF PREPARING THESE RECORD DRAWINGS. FIELD INSPECTION OF CONSTRUCTION WAS PERFORMED BY OTHERS. TO THE BEST OF OUR KNOWLEDGE AND UNDERSTANDING THESE RECORD DRAWINGS REPRESENT THE "AS-BUILT" CONDITIONS.

STATE OF TEXAS
KEVIN N. CARLSON
89232
REGISTERED PROFESSIONAL ENGINEER
1-9-09

STREETSCAPE PLAN
RINGO PLACE

ADDISON RESIDENTIAL

TOWN OF ADDISON, TEXAS

Huitt - Zollars, Inc.
3131 Mckinney Ave., Suite 600, Dallas, TX 75204
Phone (214) 871-3311/Fax (214) 871-0757

DESIGN	CHECKED	APPR.	SCALE	DATE	PROJECT NO.	NO.
HZI	HZI	DEM	1"=20'	11/20/08		C17

h:\proj\0134080\dgn\3629LS02.DGN

S20BLD01-4, h:\PROJ\0134080\DGN\3629BLD01-4.DGN, 1-61
RF1, h:\PROJ\0134080\DGN\3409BGJAN2_5_10.DGN, 59-61
RF2, h:\PROJ\0134080\DGN\3409BGJAN2_5_10.DGN, 1-5
PSBASE2-2, h:\PROJ\0134080\DGN\3409PSBASE2.DGN, 1-63
BASE2, h:\PROJ\0134080\DGN\3409PSBASE2.DGN, 12,4-7,20-24,26,28-29
S60PST0P02, h:\PROJ\0134080\DGN\3409PST0P02.DGN, 1-59,61-63
PST0P03, h:\PROJ\0134080\DGN\3409PST0P03.DGN, 1-24,27-31
S10TREET2, h:\PROJ\0134080\DGN\PS_SBASE.DGN, 1-19
PAV3T42, h:\PROJ\0134080\DGN\3409PAV3T4.DGN, 2
S60PMPUTIL2, h:\PROJ\0134080\DGN\3409PBUTIL2.DGN, 1-40,42-46,48,51-62
PRF 80741(DW49).000000
F:\TBL\HZSCREEN.TBL
h:\proj\0134080\dgn\3629LS02.DGN
Tue Nov 25, 2008 3:47 PM
\\DGN\HUSER\DGN\CLIT\DGN\4DGN\3629LS02.prf
jpace

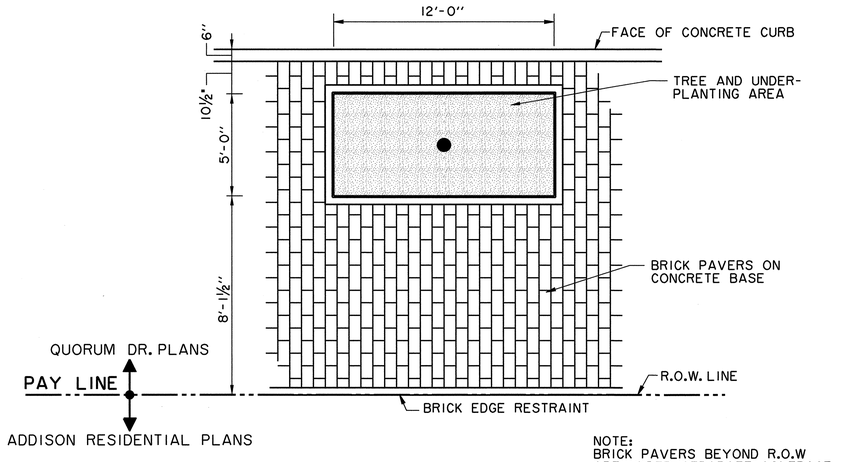

NOTE:
BRICK PAVERS BEYOND R.O.W ARE UNDER SEPARATE CONTRACT.

TREE PIT PLAN (QUORUM DRIVE)

N.T.S.

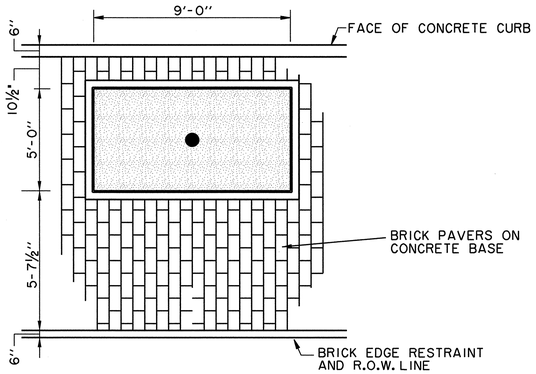

NOTE:
PLANTING BED BEYOND R.O.W. IS UNDER SEPARATE CONTRACT.

TREE PIT PLAN (MARCUS AVENUE & ARTIST WAY)

N.T.S.

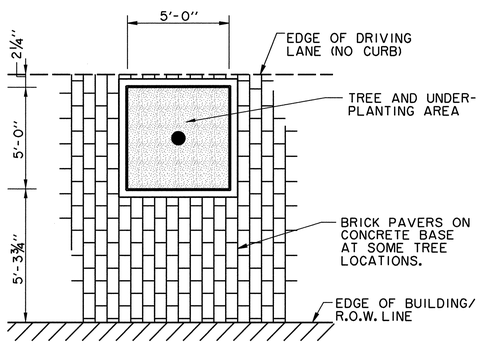

TREE PIT PLAN (RINGO PLACE)

N.T.S.

GENERAL NOTES CONCRETE SUBBASE FOR SIDEWALKS

1. REINFORCED CONCRETE SIDEWALK SHALL BE A MINIMUM OF FOUR (4) INCHES THICK AND SHALL BE 3000 PSI AT 28 DAYS (5 SACK MIX) UNLESS NOTED OTHERWISE.
2. ALL BAR DIMENSIONS ARE GIVEN AS CENTER TO CENTER OF BARS AND ARE LOCATED AS SHOWN.
3. ALL REINFORCING STEEL SHALL BE NO. 3 ON 18" CENTERS LONGITUDINALLY, 18" CENTERS TRANSVERSELY AND SHALL CONFORM TO THE REQUIREMENTS OF ASTM A-615, GRADE 60.
4. 1" THICK MIN. FINE WASHED SAND CUSHION SHALL BE FREE FROM ORGANIC MATERIALS OR CLAYS AND SHALL BE USED FOR GRADE ADJUSTMENT.
5. SUBGRADE SHALL BE COMPACTED TO A DENSITY NOT LESS THAN 95% OF STANDARD PROCTOR DENSITY AT 0 TO +3% OF OPTIMUM MOISTURE.
6. TOOLED JOINTS (CONTRACTION JOINTS) SHALL BE ON FIVE (5) FOOT CENTERS AND SHALL BE ROUND ONE-FOURTH (1/4) INCH RADIUS.

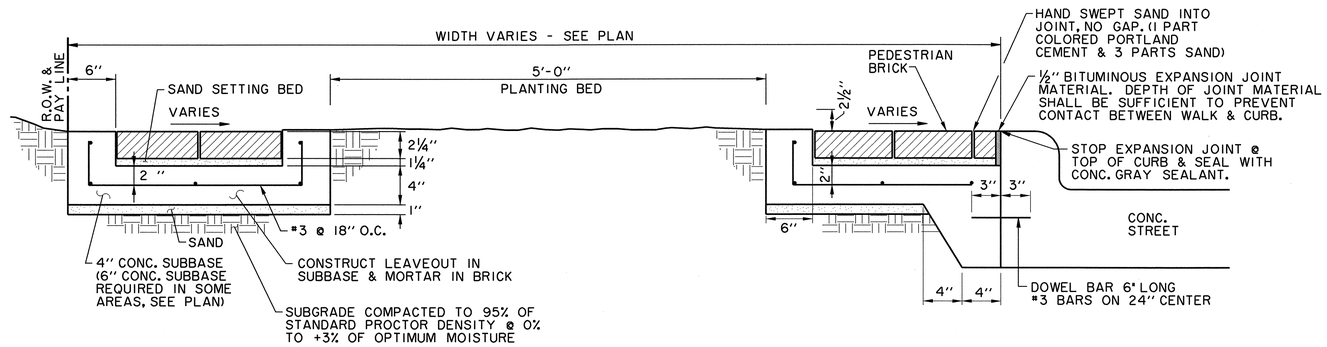

BRICK SIDEWALK INSTALLATION IN PEDESTRIAN AREA

N.T.S.

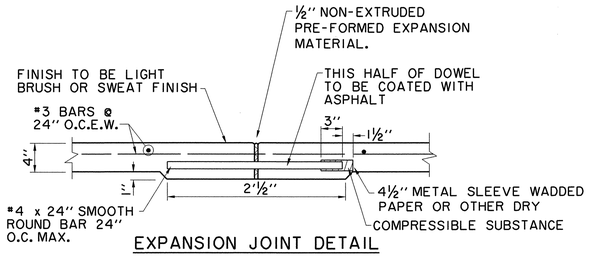

EXPANSION JOINT DETAIL

RECORD DRAWING

THIS DRAWING HAS BEEN MODIFIED FROM THE ORIGINAL TO SHOW ONLY THE FIELD CHANGES AND ADJUSTMENTS MADE DURING CONSTRUCTION BY THE CONTRACTOR WHICH WERE DOCUMENTED AND FURNISHED TO THE ENGINEER FOR THE PURPOSE OF PREPARING THESE RECORD DRAWINGS. FIELD INSPECTION OF CONSTRUCTION WAS PERFORMED BY OTHERS. TO THE BEST OF OUR KNOWLEDGE AND UNDERSTANDING THESE RECORD DRAWINGS REPRESENT THE "AS-BUILT" CONDITIONS.

STATE OF TEXAS
KEVIN N. CARLSON
89232
REGISTERED
PROFESSIONAL ENGINEER
1-9-09

STREETSCAPE DETAILS

ADDISON RESIDENTIAL

TOWN OF ADDISON, TEXAS

Huitt - Zollars, Inc.
3131 Mckinney Ave., Suite 600, Dallas, TX 75204
Phone (214) 871-3311/Fax (214) 871-0757

DESIGN	CHECKED	APPR.	SCALE	DATE	PROJECT NO.	NO.
HZI	HZI		N.T.S.	11/20/08		C18

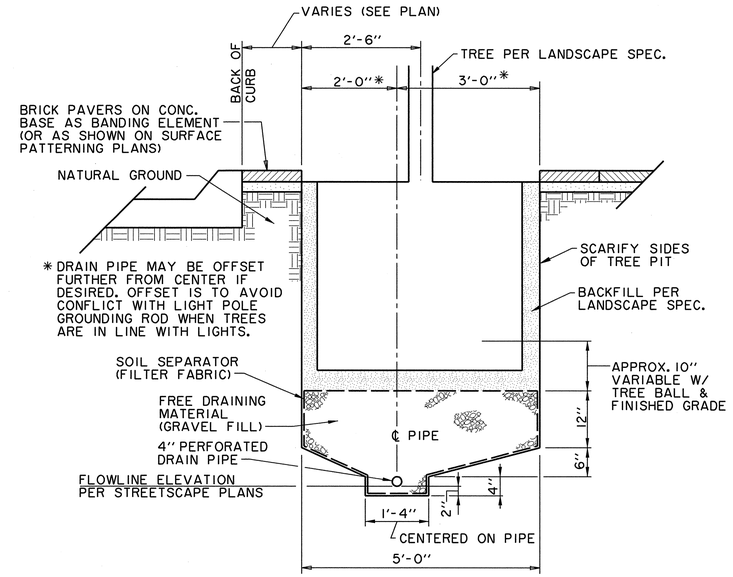

SUBSURFACE DRAIN SYSTEM DETAIL
(SECTION PERPENDICULAR TO CURB)

N.T.S.

(TO BE USED ON ALL TREES UNLESS OTHERWISE NOTED)

USE CAUTION WHEN SETTING ANCHOR BOLTS. BOLTS MUST BE VERT. STRAIGHT & CENTERED ON DIMENSIONS SHOWN.

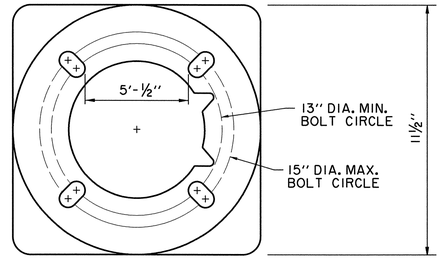

BASE ANCHOR PLATE (PEDESTRIAN POLE)

N.T.S.

NOTE:

ADEQUATE DRAINAGE MUST BE PROVIDED IN CONC. FOUNDATION OR GROUT.

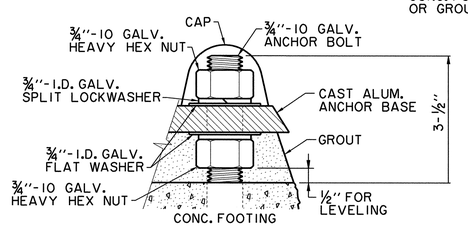

BOLT PROJECTION DETAIL (PEDESTRIAN)

N.T.S.

STREET LIGHTING NOTES

1. THE PEDESTRIAN STREET LIGHTING FOR THIS PROJECT WILL CONSIST OF INSTALLATION OF 2" PVC CONDUIT, LIGHT POLE BASES, PULL BOXES (HANDHOLES) LIGHT POLES, LUMINAIRES, WIRING & CONNECTION TO POWER SOURCE AS A COMPLETE SYSTEM PER DETAILED SPECIFICATIONS.
2. ALL STREET LIGHTING CONDUIT IS TO BE INSTALLED WITH A MIN. OF 24 INCHES OF COVER TO THE TOP OF THE PIPE FROM FINISHED PVMT. TO AVOID CONFLICT WITH IRRIGATION LINES WHICH WILL BE @ 12" & 18" DEPTH. CONDUIT SHOULD BE NO DEEPER THAN 36" TO AVOID CONFLICT WITH OTHER UTILITIES.
3. FOR THE PURPOSES OF COORDINATION, PEDESTRIAN LIGHTS TO BE INTALLED PER THE STREETSCAPE PLANS FOR THIS PROJECT WILL BE THE FOLLOWING:

   SEE SHEET C48.00 FOR POLE TYPES.

   THIS POLE WILL BE INSTALLED WITH A 175 WATT METAL HALIDE BEGA 9801 ED-17MH/120V FIXTURE AND LUMINAIRE.

   POLES WILL BE PRIMED AND PAINTED AT THE FACTORY.
4. LOCATIONS OF ANY STREET LIGHTS MAY NOT BE ALTERED WITHOUT PERMISSION FROM THE ENGINEER.
5. THE LETTER "C" SHALL BE STAMPED OR CHISELED ON CURB AT ALL LOCATIONS OF CONDUIT UNDER STREETS, DRIVES AND INTERSECTIONS.

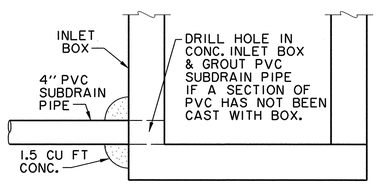

PVC SUBDRAIN PIPE CONNECTION TO INLET BOX

N.T.S.

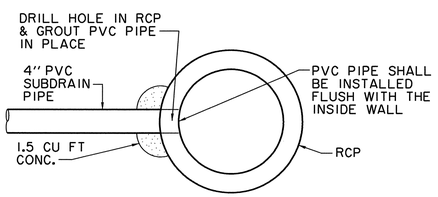

PVC SUBDRAIN PIPE CONNECTION TO STORM DRAINAGE PIPE

N.T.S.

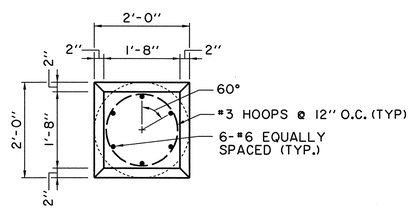

LIGHT FIXTURE FOUNDATION AND CAP PLAN (PEDESTRIAN AND VEHICULAR POLE)

N.T.S.

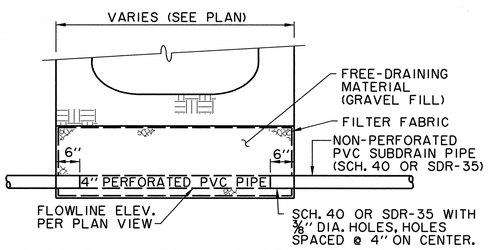

SUBSURFACE DRAIN SYSTEM DETAIL (SECTION PARALLEL TO CURB)

N.T.S.

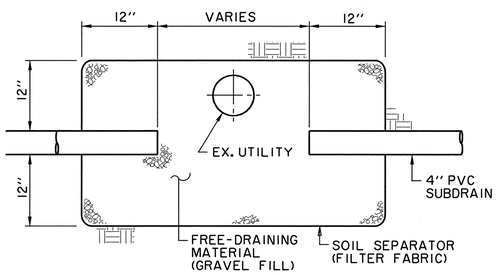

INSTALLATION OF SUBDRAIN AT UTILITY CONFLICT

N.T.S.

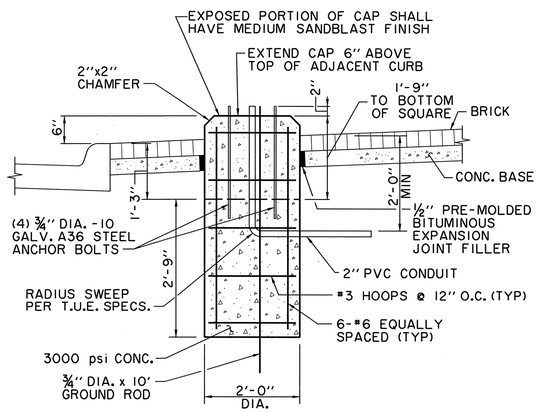

PEDESTRIAN LIGHT FIXTURE FOUNDATION AND CAP SECTION

N.T.S.

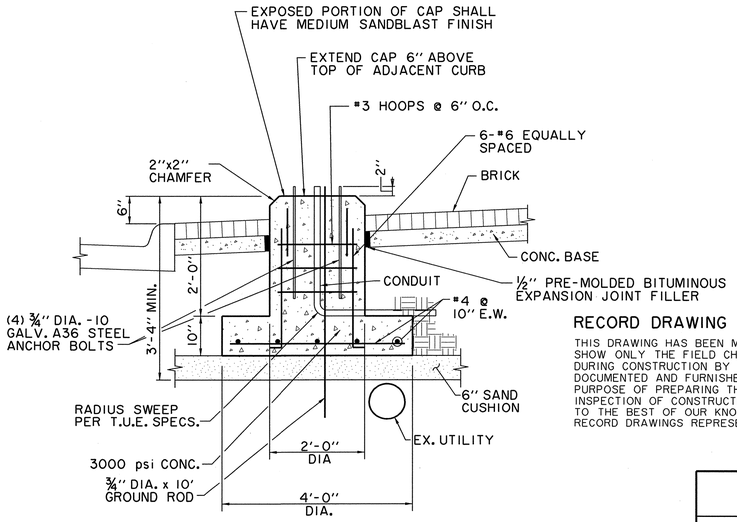

ALTERNATE PEDESTRIAN LIGHT FIXTURE FOOTING AT UTILITY CONFLICT

N.T.S.

(NOT TO BE USED FOR HANGING LIGHT FOUNDATION)

RECORD DRAWING

THIS DRAWING HAS BEEN MODIFIED FROM THE ORIGINAL TO SHOW ONLY THE FIELD CHANGES AND ADJUSTMENTS MADE DURING CONSTRUCTION BY THE CONTRACTOR WHICH WERE DOCUMENTED AND FURNISHED TO THE ENGINEER FOR THE PURPOSE OF PREPARING THESE RECORD DRAWINGS. FIELD INSPECTION OF CONSTRUCTION WAS PERFORMED BY OTHERS. TO THE BEST OF OUR KNOWLEDGE AND UNDERSTANDING THESE RECORD DRAWINGS REPRESENT THE "AS-BUILT" CONDITIONS.

STATE OF TEXAS
KEVIN N. CARLSON
89232
REGISTERED
PROFESSIONAL ENGINEER
1-9-09

STREETSCAPE DETAILS						
ADDISON RESIDENTIAL						
TOWN OF ADDISON, TEXAS						
Huitt - Zollars, Inc. 3131 Mckinney Ave., Suite 600, Dallas, TX 75204 Phone (214) 871-3311/Fax (214) 871-0757						
DESIGN	CHECKED	APPR.	SCALE	DATE	PROJECT NO.	NO.
HZI	HZI		N.T.S.	11/20/08		C19

h:\proj\01340801\dgn\36295TSCP2.DGN

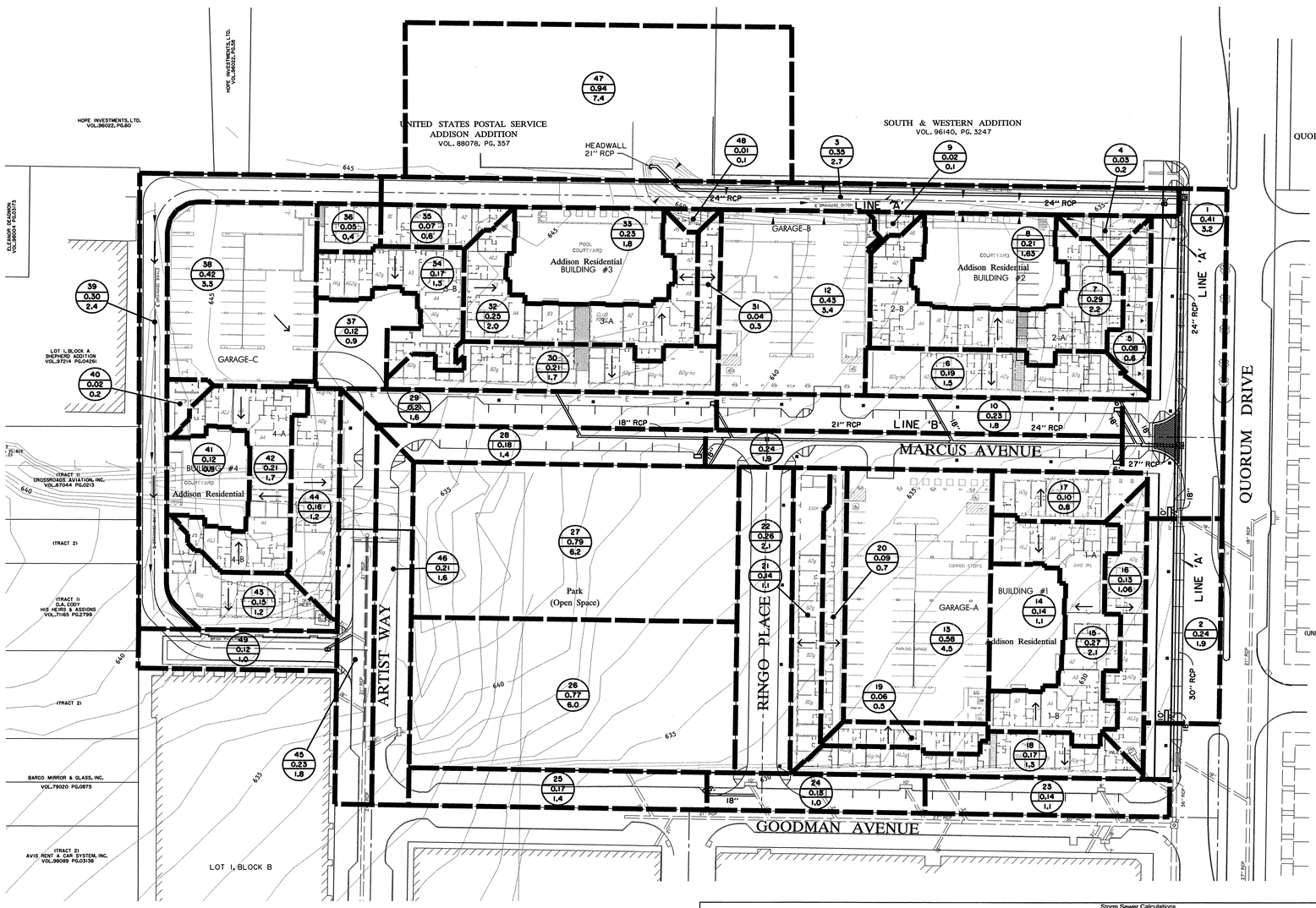

N

0 25 50 75 100
SCALE IN FEET
SCALE: 1" = 50'

LEGEND

EXISTING CONTOUR	
DRAINAGE DIVIDE LINE	— — —
SURFACE FLOW DIRECTION	⟶
DRAINAGE AREA NUMBER	7 / 0.18 / 1.4 — DRAINAGE AREA IDENTIFIER; AREA (ACRES); 100 Y STORM RUNOFF

RECORD DRAWING

THIS DRAWING HAS BEEN MODIFIED FROM THE ORIGINAL TO SHOW ONLY THE FIELD CHANGES AND ADJUSTMENTS MADE DURING CONSTRUCTION BY THE CONTRACTOR WHICH WERE DOCUMENTED AND FURNISHED TO THE ENGINEER FOR THE PURPOSE OF PREPARING THESE RECORD DRAWINGS. FIELD INSPECTION OF CONSTRUCTION WAS PERFORMED BY OTHERS. TO THE BEST OF OUR KNOWLEDGE AND UNDERSTANDING THESE RECORD DRAWINGS REPRESENT THE "AS-BUILT" CONDITIONS.

STATE OF TEXAS
KEVIN N. CARLSON
89232
REGISTERED
PROFESSIONAL ENGINEER
1-9-09

Grate Inlet Calculations

Inlet No.	Runoff Q_{100} (cfs)	Head on Grate 'y' (ft)	Area Required (ft^2)	Area Provided (ft^2)	Inlet Type
A3	2.7	0.22	1.19	3.42	2-grate
H8	3.4	0.15	1.82	3.42	2-grate

$A_{Required} = Q/(4.82y^{1/2})$

$A_{Provided}$ = 246 sq. in per grate

AREA NO.	AREA "A" (ACRES)	Tc (MIN)	INTENSITY $"I_{100}"$ (IN/HR)	RUNOFF COEFF. "C"	STORM RUNOFF $"Q_{100}"$	REMARKS	AREA NO.	AREA "A" (ACRES)	Tc (MIN)	INTENSITY $"I_{100}"$ (IN/HR)	RUNOFF COEFF. "C"	STORM RUNOFF $"Q_{100}"$	REMARKS
1	0.41	10	8.74	0.9	3.2	LINE 'A'	26	0.77	10	8.74	0.9	6.1	EX. RCP
2	0.24	10	8.74	0.9	1.9	LINE 'A'	27	0.79	10	8.74	0.9	6.2	LINE 'B'
3	0.35	10	8.74	0.9	2.7	LINE 'A'	28	0.18	10	8.74	0.9	1.4	LINE 'B'
4	0.03	10	8.74	0.9	0.2	LINE 'A'	29	0.21	10	8.74	0.9	1.6	LINE 'B'
5	0.08	10	8.74	0.9	0.6	LINE 'B'	30	0.21	10	8.74	0.9	1.7	LINE 'B'
6	0.19	10	8.74	0.9	1.5	LINE 'B'	31	0.04	10	8.74	0.9	0.3	LINE 'B'
7	0.29	10	8.74	0.9	2.2	LINE 'A'	32	0.25	10	8.74	0.9	2.0	LINE 'A'
8	0.21	10	8.74	0.9	1.6	LINE 'A'	33	0.23	10	8.74	0.9	1.8	LINE 'A'
9	0.02	10	8.74	0.9	0.1	LINE 'A'	34	0.17	10	8.74	0.9	1.3	LINE 'B'
10	0.23	10	8.74	0.9	1.8	LINE 'B'	35	0.07	10	8.74	0.9	0.6	LINE 'A'
11	0.24	10	8.74	0.9	1.9	LINE 'B'	36	0.05	10	8.74	0.9	0.4	LINE 'A'
12	0.43	10	8.74	0.9	3.4	LINE 'B'	37	0.12	10	8.74	0.9	0.9	LINE 'B'
13	0.58	10	8.74	0.9	4.5	EX. RCP	38	0.42	10	8.74	0.9	3.3	LINE 'B'
14	0.14	10	8.74	0.9	1.1	EX. RCP	39	0.30	10	8.74	0.9	2.4	LAT 'H8'
15	0.27	10	8.74	0.9	2.1	EX. RCP	40	0.02	10	8.74	0.9	0.2	EX. RCP
16	0.12	10	8.74	0.9	1.0	EX. RCP	41	0.12	10	8.74	0.9	0.9	EX. RCP
17	0.10	10	8.74	0.9	0.8	EX. RCP	42	0.21	10	8.74	0.9	1.7	EX. RCP
18	0.17	10	8.74	0.9	1.3	EX. RCP	43	0.15	10	8.74	0.9	1.2	EX. RCP
19	0.06	10	8.74	0.9	0.5	EX. RCP	44	0.16	10	8.74	0.9	1.2	EX. RCP
20	0.09	10	8.74	0.9	0.7	EX. RCP	45	0.23	10	8.74	0.9	1.8	EX. RCP
21	0.14	10	8.74	0.9	1.1	EX. RCP	46	0.21	10	8.74	0.9	1.6	EX. RCP
22	0.26	10	8.74	0.9	2.1	EX. RCP	47	0.94	10	8.74	0.9	7.4	LINE 'A'
23	0.14	10	8.74	0.9	1.1	EX. RCP	48	0.01	10	8.74	0.9	0.1	LINE 'A'
24	0.13	10	8.74	0.9	1.0	EX. RCP	49	0.12	10	8.74	0.9	1.0	LAT 'H8'
25	0.17	10	8.74	0.9	1.4	EX. RCP							

Storm Sewer Calculations

Line or Lateral Name	Runoff Collection Point (Inlet or Manhole) Upstream Station	Downstream Station	Distance Between Collection Points	Incremental Drainage Area: Area No.	Drainage Area "A" (acres)	Runoff Coeff. "C"	Incremental "CA"	Accumulated "CA"	Time at Upstream Station (minutes)	Design Storm Frequency (years)	Intensity "I" (in/hr)	Storm Runoff "Q" (cfs)	Slope of Hydraulic Gradient "S" (ft/ft)	Selected Storm Water Size	Velocity in Sewer Between Connection Points "V" (fps)	Velocity Head Loss at Upstream Station	Inlet, Manhole, Bends, Lateral, or Junction Box Losses	Head Loss Coeff Kj	Flow Time in Sewer (minutes)	Time at Downstream Station (minutes)	Hydraulic Grade Line Elevation Upstream (elev)	Hydraulic Grade Line Elevation Downstream (elev)	Remarks
0	1	2	3	4	5	6	7	8	9	10	11	12	13	14	15	16	17	18	19	20	21	22	23
A																							
Offsite, Roof drains	1994.57	1557.91	436.66	32,33,35,36,47,48,4,8,9	1.62	0.9	1.458	1.458	10	100	8.74	12.743	0.0032	24	4.06	0.255	Lateral	0.6	1.79	11.79	629.67	628.28	
A3	1557.91	1544.57	13.34	3	0.35	0.9	0.315	1.773	10	100	8.74	15.496	0.0047	24	4.93	0.378	Lateral	0.6	0.05	11.84	628.06	628.00	
Ex. Pipe	1554.57	1339.57	215	50	1.4	0.9	1.26	3.033	10	100	11.6	35.183	0.0074	30	7.17	0.798	Lateral	0.6	0.50	12.34	627.36	625.78	
B	1339.57	1282.13	57.44	4,5,6,7,8,9,10,11,12,27,2 8,29,30,31,34,37	3.31	0.9	2.979	6.012	10	100	8.74	52.545	0.0062	36	7.43	0.858	Manhole	0.6	0.13	12.47	625.30	624.94	
A2	1282.13	1112.73	169.4	1	0.41	0.9	0.369	6.381	10	100	8.74	55.770	0.0070	36	7.89	0.967	Lateral	0.6	0.36	12.83	624.49	623.30	
A1	1112.73	1070.00	42.73	2	0.24	0.9	0.216	6.597	10	100	8.74	57.658	0.0075	36	8.16	1.033	Lateral	0.6	0.09	12.91	622.85	622.53	
A1																							
	5.56	0.00	5.56	2	0.24	0.9	0.216	0.216	10	100	8.74	1.888	0.0003	18	1.07	0.018	Inlet	1.25	0.09	10.09	622.85	622.84	
A2																							
	5.56	0.00	5.56	1	0.41	0.9	0.369	0.369	10	100	8.74	3.225	0.0009	18	1.83	0.052	Inlet	1.25	0.05	10.05	624.48	624.47	
A3																							
	5.14	0.00	5.14	3	0.35	0.9	0.315	0.315	10	100	8.74	2.753	0.0007	18	1.56	0.038	Inlet	1.25	0.05	10.05	628.05	628.05	
B																							
B8	496.00	391.00	105	34,37,30	0.92	0.9	0.828	0.828	10	100	8.74	7.237	0.0047	18	4.10	0.260	Lateral	0.6	0.43	10.43	632.14	631.64	
B7	391.00	376.00	15	28	0.18	0.9	0.162	0.99		100	8.74	8.653	0.0068	18	4.90	0.372	Lateral	0.6	0.05	10.48	631.43	631.32	
B6	376.00	370.00	6	27	0.79	0.9	0.711	1.701		100	8.74	14.867	0.0088	21	6.18	0.593	Lateral	0.6	0.02	10.49	630.95	630.90	
B5	370.00	188.00	182	29	0.21	0.9	0.189	1.89		100	8.74	16.519	0.0109	21	6.87	0.732	Lateral	0.6	0.44	10.94	630.53	628.55	
B4	188.00	44.00	144	12,6,31	0.66	0.9	0.594	2.484		100	8.74	21.710	0.0092	24	6.91	0.742	Lateral	0.6	0.35	11.28	628.25	626.92	
B3	44.00	36.00	8	11	0.24	0.9	0.216	2.7		100	8.74	23.598	0.0109	24	7.51	0.876	Lateral	0.6	0.02	11.30	626.49	626.40	
B2	36.00	29.00	7	10	0.23	0.9	0.207	2.907		100	8.74	25.407	0.0126	24	8.09	1.016	Lateral	0.6	0.01	11.32	625.91	625.82	
B1	29.00	0.00	29	5	0.08	0.9	0.072	2.979		100	8.74	26.036	0.0071	27	6.55	0.666	Lateral	0.6	0.07	11.39	625.77	625.56	
B8	42.87	0	42.87	34,37,30	0.92	0.9	0.828	0.828	10	100	8.74	7.23672	0.0047	18	4.10	0.260	Lateral	0.6	0.17	10.17	632.45	632.25	
B7	13.28	0	13.28	28	0.18	0.9	0.162	0.162	10	100	8.74	1.41588	0.0002	18	0.80	0.010	Inlet	1.25	0.28	10.28	631.79	631.79	
B6	27.00	0	27	27	0.79	0.9	0.711	0.711	10	100	8.74	6.21414	0.0035	18	3.52	0.192	Lateral	0.6	0.13	10.13	631.53	631.43	
B5	29.44	0	29.44	29	0.21	0.9	0.189	0.189	10	100	8.74	1.65186	0.0002	18	0.93	0.014	Inlet	1.25	0.52	10.52	631.25	631.24	
B4	44.00	0	44	12,6,31	0.66	0.9	0.594	0.594	10	100	8.74	5.19156	0.0024	18	2.94	0.134	Lateral	0.6	0.25	10.25	629.01	628.91	
B3	16.00	0	16	11	0.24	0.9	0.216	0.216	10	100	8.74	1.88784	0.0003	18	1.07	0.018	Inlet	1.25	0.25	10.25	627.35	627.34	
B2	32.00	0	32	10	0.23	0.9	0.207	0.207	10	100	8.74	1.80918	0.0003	18	1.02	0.016	Inlet	1.25	0.52	10.52	626.92	626.91	
B1	43.00	0	43	5	0.08	0.9	0.072	0.072	10	100	8.74	0.62928	0.0000	18	0.36	0.002	Lateral	0.6	2.01	12.01	626.43	626.43	
H8	22.80	0	22.8	39,49	0.42	0.9	0.378	0.378	10	100	8.74	3.30372	0.0010	18	1.87	0.054	Lateral	0.6	0.20	10.20	631.02	631.00	

DRAINAGE AREA MAP

ADDISON RESIDENTIAL

TOWN OF ADDISON, TEXAS

Hurit - Zollars, Inc.
3131 Mckinney Ave., Suite 600, Dallas, TX 75204
Phone (214) 871-3311/Fax (214) 871-0757

DESIGN	CHECKED	APPR.	SCALE	DATE	PROJECT NO.	NO.
HZI	HZI	DEM	1"=50'	11/20/08		C20

h:\proj\0134080\dgn\36290AM.DGN

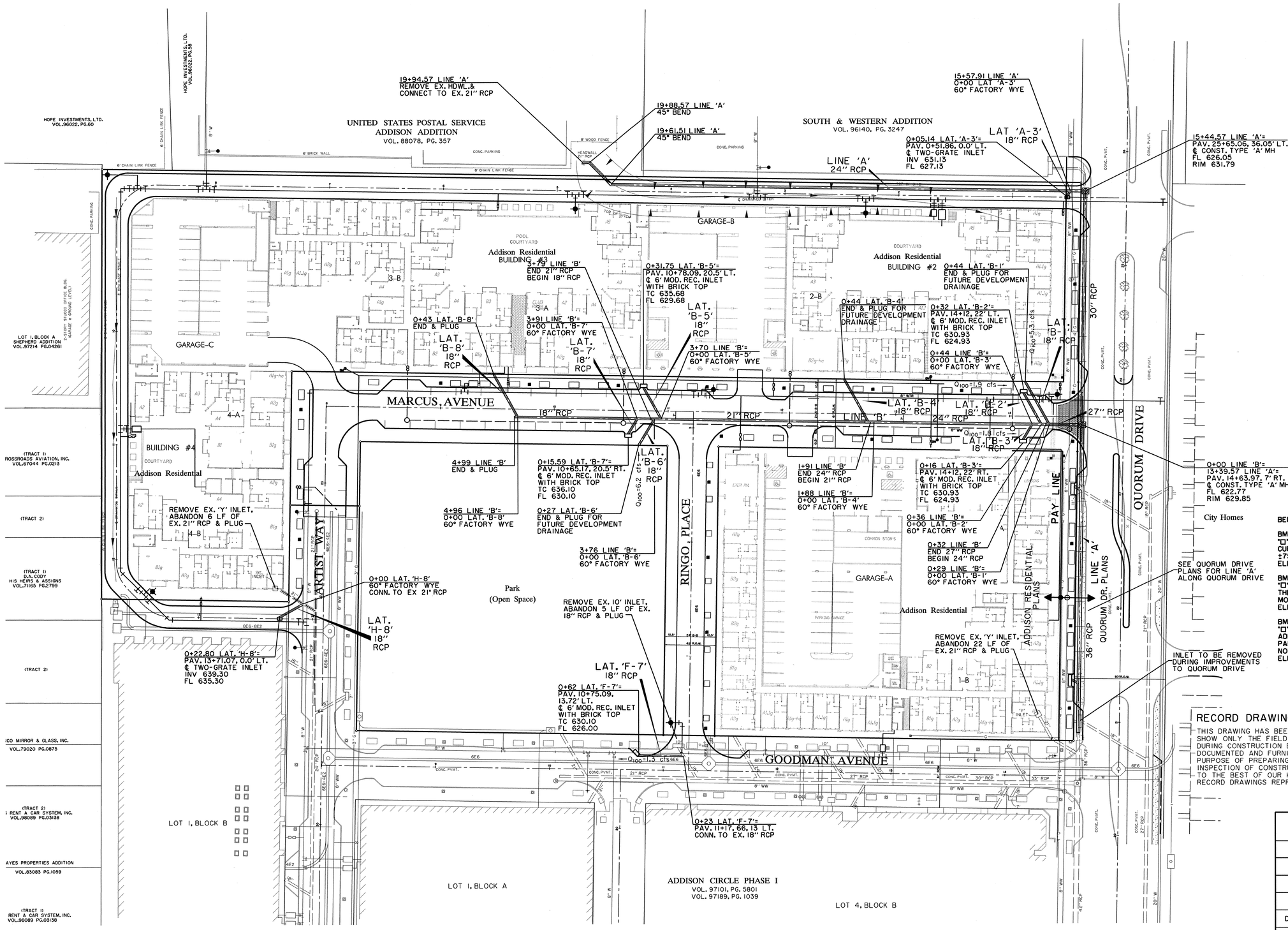

BENCHMARKS:

BM#5
"□" CUT ON 8' INLET ON NORTH CURB LINE OF GOODMAN AVE. ±75' EAST OF PASCHAL PLACE.
ELEV. 629.98

BM#6
"□" CUT AT ℄ OF 8' INLET AT THE SOUTHWEST CORNER OF MORRIS AVE. AND WITT PLACE.
ELEV. 627.29

BM#7
"□" CUT AT WEST CORNER OF ADDISON THEATRE CENTRE PARKING LOT. SECOND ENTRANCE NORTH OF ADDISON RD.
ELEV. 637.66

RECORD DRAWING

THIS DRAWING HAS BEEN MODIFIED FROM THE ORIGINAL TO SHOW ONLY THE FIELD CHANGES AND ADJUSTMENTS MADE DURING CONSTRUCTION BY THE CONTRACTOR WHICH WERE DOCUMENTED AND FURNISHED TO THE ENGINEER FOR THE PURPOSE OF PREPARING THESE RECORD DRAWINGS. FIELD INSPECTION OF CONSTRUCTION WAS PERFORMED BY OTHERS. TO THE BEST OF OUR KNOWLEDGE AND UNDERSTANDING THESE RECORD DRAWINGS REPRESENT THE "AS-BUILT" CONDITIONS.

STATE OF TEXAS
KEVIN N. CARLSON
89232
REGISTERED PROFESSIONAL ENGINEER
1-9-09

STORM WATER PLAN

ADDISON RESIDENTIAL

TOWN OF ADDISON, TEXAS

Huitt - Zollars, Inc.
3131 Mckinney Ave., Suite 600, Dallas, TX 75204
Phone (214) 871-3311/Fax (214) 871-0757

DESIGN	CHECKED	APPR.	SCALE	DATE	PROJECT NO.	NO.
HZI	HZI	DEM	1"=40'	11/20/08		C21

h:\proj\0134080\dgn\3629ST01.DGN

Addison Residential

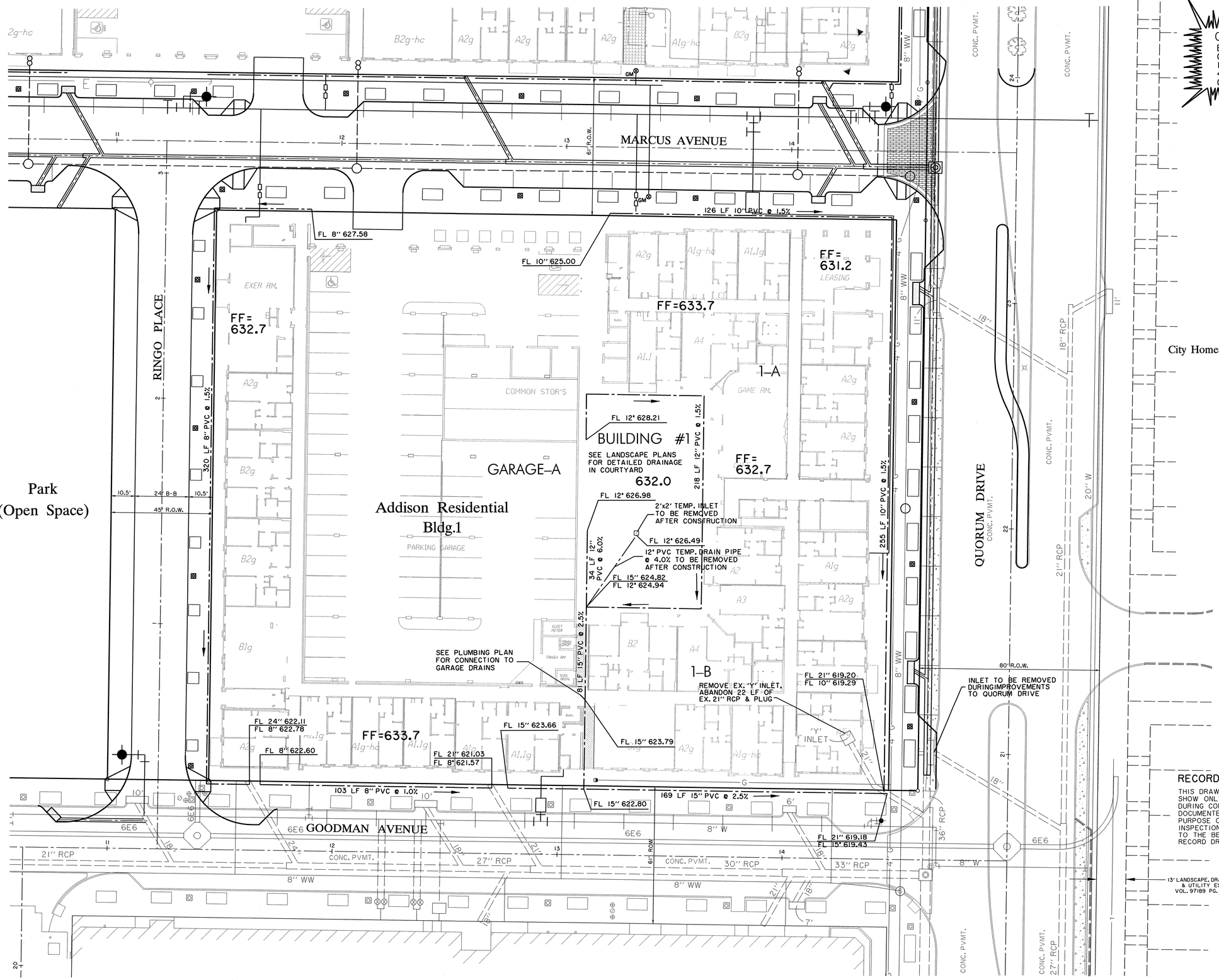

Addison Circle Phase I

CAUTION!!
EXIST. GAS MAIN IN AREA
CONTACT TEXAS ONE CALL
1-800-245-4545
48 HOURS PRIOR TO
CONSTRUCTION

N

0 10 20 30 40
SCALE IN FEET
SCALE: 1" = 20'

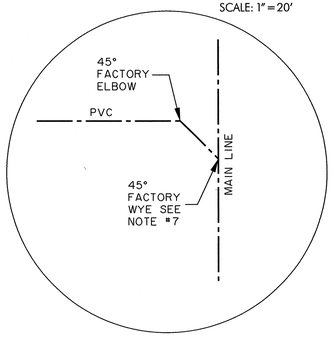

City Homes

NOTES:

1. PRIVATE DRAINS ARE TO BE LOCATED AS SHOWN IN TYPICAL SECTIONS AND ON PLANS. THE HORIZONTAL LOCATION IS A GUIDE AND MAY BE ADJUSTED AS NEEDED TO AVOID CONFLICTS.

2. SEE SHEET C21 FOR PUBLIC INFRASTRUCTURE PLANS FOR PUBLIC STORM DRAINAGE SYSTEM.

3. SEE LANDSCAPE AND ARCHITECTURAL PLANS FOR DETAILED LOCATIONS OF PRIVATE DRAIN INLETS AND ROOF DOWNSPOUTS. INSTALL WYES AND RISERS FOR DOWNSPOUTS AT THE TIME THE MAIN IS INSTALLED.

4. ALL PRIVATE DRAINS UNDER BUILDINGS SHALL CONFORM TO THE REQUIREMENTS OF THE LOCALLY RECOGNIZED BUILDING CODES. PVC SCH. 40 SHALL BE USED UNDER BUILDINGS AND PVC SDR 35 SHALL BE USED IN ALL OTHER CASES.

5. SPECIFIC ROUTING OF DRAINS MAY BE MODIFIED IN THE FIELD AT THE DIRECTION OF THE OWNER OR LANDSCAPE ARCHITECT AS LONG AS THE INDICATED SIZES AND SLOPES ARE MAINTAINED.

6. CLEANOUTS SHALL BE INSTALLED AT APPROXIMATELY 100' INTERVALS AND AT ALL CHANGES IN ALIGNMENT. LOCATE CLEANOUTS IN PLANTING AREAS TO THE EXTENT POSSIBLE.

7. ALL CONNECTIONS BETWEEN DRAINS SHALL BE FACTORY WYES. ALL BENDS SHALL BE 45 DEGREE FACTORY ELBOWS.

8. PRIVATE DRAINS IN THE MEWS TO BE TESTED PER NCTCOG STANDARD SPECIFICATIONS.

BENCHMARKS:

BM#5
"□" CUT ON 8' INLET ON NORTH CURB LINE OF GOODMAN AVE. ±75' EAST OF PASCHAL PLACE. ELEV. 629.98

BM#6
"□" CUT AT ℄ OF 8' INLET AT THE SOUTHWEST CORNER OF MORRIS AVE. AND WITT PLACE. ELEV. 627.29

BM#7
"□" CUT AT WEST CORNER OF ADDISON THEATRE CENTRE PARKING LOT. SECOND ENTRANCE NORTH OF ADDISON RD. ELEV. 637.66

RECORD DRAWING

THIS DRAWING HAS BEEN MODIFIED FROM THE ORIGINAL TO SHOW ONLY THE FIELD CHANGES AND ADJUSTMENTS MADE DURING CONSTRUCTION BY THE CONTRACTOR WHICH WERE DOCUMENTED AND FURNISHED TO THE ENGINEER FOR THE PURPOSE OF PREPARING THESE RECORD DRAWINGS. FIELD INSPECTION OF CONSTRUCTION WAS PERFORMED BY OTHERS. TO THE BEST OF OUR KNOWLEDGE AND UNDERSTANDING THESE RECORD DRAWINGS REPRESENT THE "AS-BUILT" CONDITIONS.

STATE OF TEXAS
KEVIN N. CARLSON
89232
REGISTERED
PROFESSIONAL ENGINEER
1-9-09

STORM WATER PLAN
BLDG. 1

ADDISON RESIDENTIAL

TOWN OF ADDISON, TEXAS

Huitt - Zollars, Inc.
3131 Mckinney Ave., Suite 600, Dallas, TX 75204
Phone (214) 871-3311/Fax (214) 871-0757

DESIGN	CHECKED	APPR.	SCALE	DATE	PROJECT NO.	NO.
HZI	HZI	DEM	1"=20'	11/20/08		C22

h:\proj\01340801\dgn\3629ST02.DGN

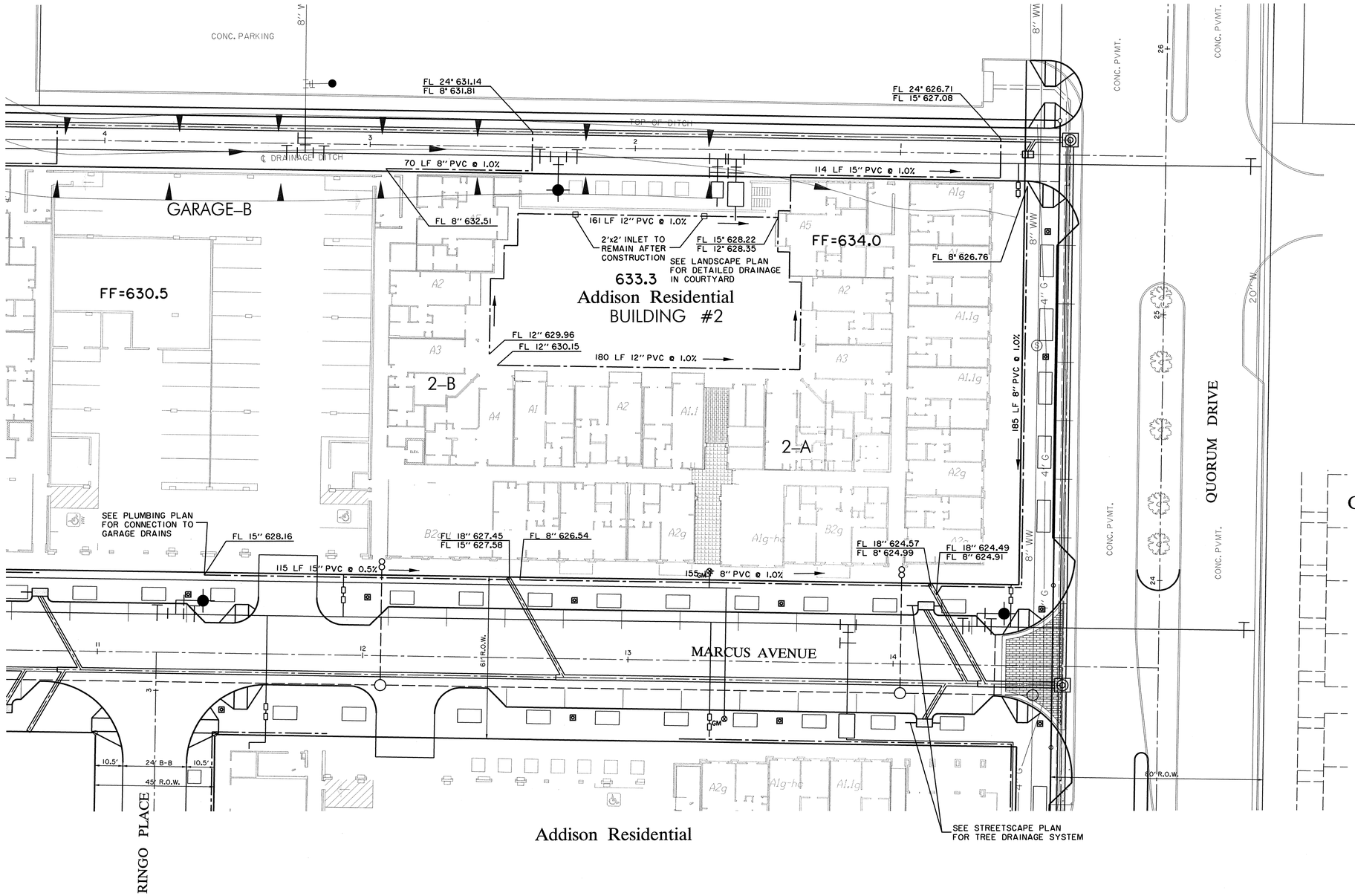

CAUTION!!
EXIST. GAS MAIN IN AREA
CONTACT TEXAS ONE CALL
1-800-245-4545
48 HOURS PRIOR TO
CONSTRUCTION

N

0 10 20 30 40
SCALE IN FEET
SCALE: 1" = 20'

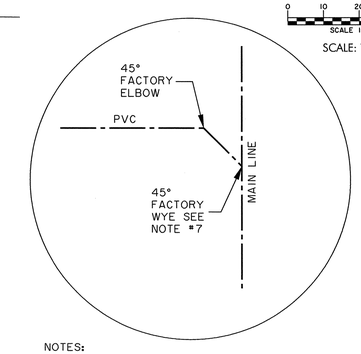

NOTES:

1. PRIVATE DRAINS ARE TO BE LOCATED AS SHOWN IN TYPICAL SECTIONS AND ON PLANS. THE HORIZONTAL LOCATION IS A GUIDE AND MAY BE ADJUSTED AS NEEDED TO AVOID CONFLICTS.

2. SEE SHEET C21 FOR PUBLIC INFRASTRUCTURE PLANS FOR PUBLIC STORM DRAINAGE SYSTEM.

3. SEE LANDSCAPE AND ARCHITECTURAL PLANS FOR DETAILED LOCATIONS OF PRIVATE DRAIN INLETS AND ROOF DOWNSPOUTS. INSTALL WYES AND RISERS FOR DOWNSPOUTS AT THE TIME THE MAIN IS INSTALLED.

4. ALL PRIVATE DRAINS UNDER BUILDINGS SHALL CONFORM TO THE REQUIREMENTS OF THE LOCALLY RECOGNIZED BUILDING CODES. PVC SCH. 40 SHALL BE USED UNDER BUILDINGS AND PVC SDR 35 SHALL BE USED IN ALL OTHER CASES.

5. SPECIFIC ROUTING OF DRAINS MAY BE MODIFIED IN THE FIELD AT THE DIRECTION OF THE OWNER OR LANDSCAPE ARCHITECT AS LONG AS THE INDICATED SIZES AND SLOPES ARE MAINTAINED.

6. CLEANOUTS SHALL BE INSTALLED AT APPROXIMATELY 100' INTERVALS AND AT ALL CHANGES IN ALIGNMENT. LOCATE CLEANOUTS IN PLANTING AREAS TO THE EXTENT POSSIBLE.

7. ALL CONNECTIONS BETWEEN DRAINS SHALL BE FACTORY WYES. ALL BENDS SHALL BE 45 DEGREE FACTORY ELBOWS.

8. PRIVATE DRAINS IN THE MEWS TO BE TESTED PER NCTCOG STANDARD SPECIFICATIONS.

BENCHMARKS:

BM#5
"□" CUT ON 8' INLET ON NORTH CURB LINE OF GOODMAN AVE. ±75' EAST OF PASCHAL PLACE. ELEV. 629.98

BM#6
"□" CUT AT ℄ OF 8' INLET AT THE SOUTHWEST CORNER OF MORRIS AVE. AND WITT PLACE. ELEV. 627.29

BM#7
"□" CUT AT WEST CORNER OF ADDISON THEATRE CENTRE PARKING LOT, SECOND ENTRANCE NORTH OF ADDISON RD. ELEV. 637.66

RECORD DRAWING

THIS DRAWING HAS BEEN MODIFIED FROM THE ORIGINAL TO SHOW ONLY THE FIELD CHANGES AND ADJUSTMENTS MADE DURING CONSTRUCTION BY THE CONTRACTOR WHICH WERE DOCUMENTED AND FURNISHED TO THE ENGINEER FOR THE PURPOSE OF PREPARING THESE RECORD DRAWINGS. FIELD INSPECTION OF CONSTRUCTION WAS PERFORMED BY OTHERS. TO THE BEST OF OUR KNOWLEDGE AND UNDERSTANDING THESE RECORD DRAWINGS REPRESENT THE "AS-BUILT" CONDITIONS.

STATE OF TEXAS
KEVIN N. CARLSON
89232
REGISTERED PROFESSIONAL ENGINEER
1-9-09

STORM WATER PLAN BLDG. 2						
ADDISON RESIDENTIAL						
TOWN OF ADDISON, TEXAS						
Huitt - Zollars, Inc. 3131 McKinney Ave., Suite 600, Dallas, TX 75204 Phone (214) 871-3311/Fax (214) 871-0757						
DESIGN	CHECKED	APPR.	SCALE	DATE	PROJECT NO.	NO.
HZI	HZI	DEM	1"=20'	11/20/08		C23

h:\proj\01340801\dgn\3629ST03.DGN

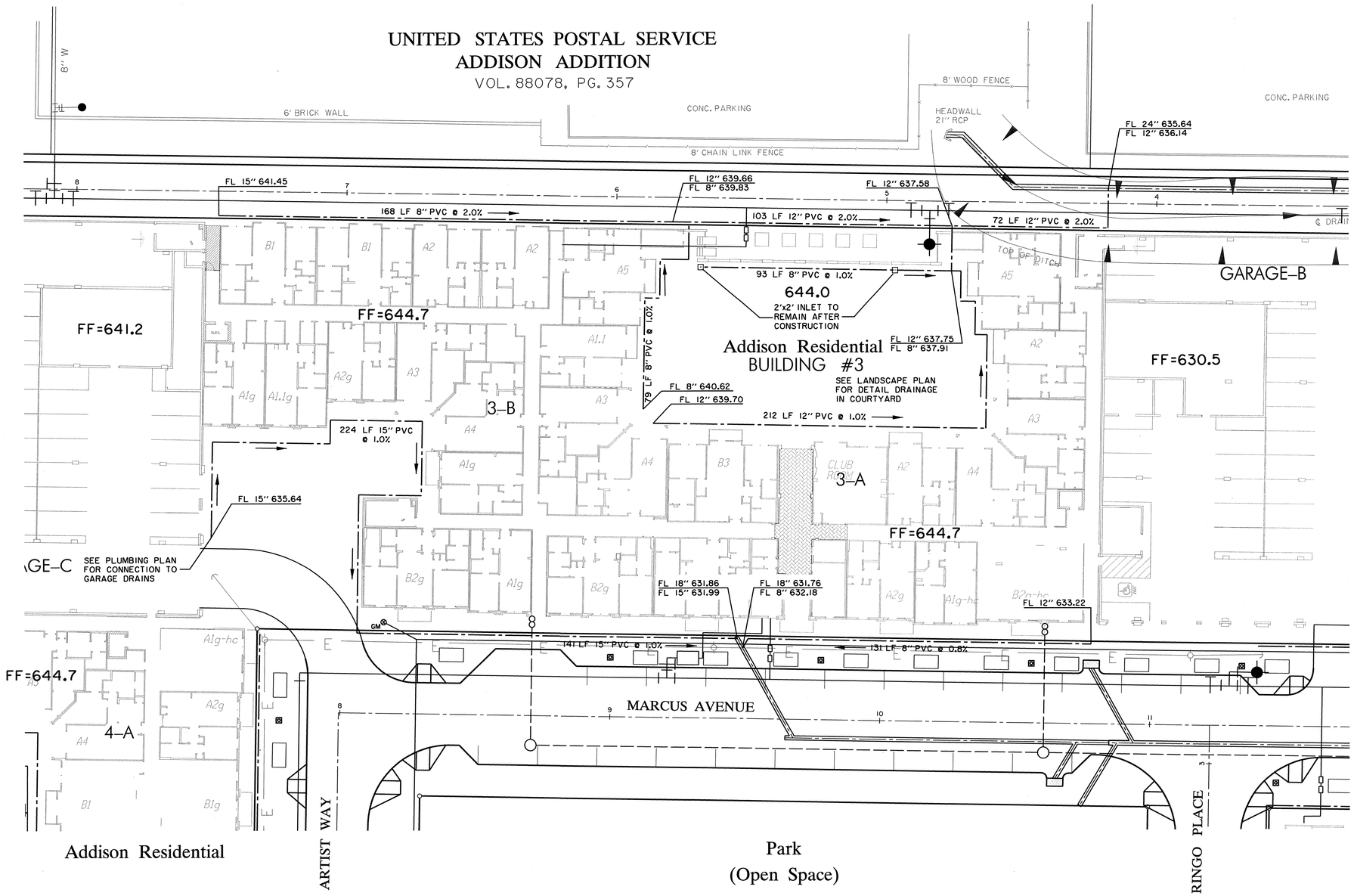

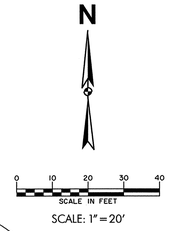

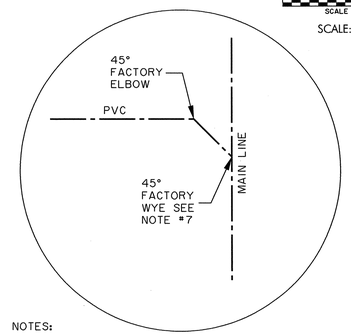

NOTES:

1. PRIVATE DRAINS ARE TO BE LOCATED AS SHOWN IN TYPICAL SECTIONS AND ON PLANS. THE HORIZONTAL LOCATION IS A GUIDE AND MAY BE ADJUSTED AS NEEDED TO AVOID CONFLICTS.

2. SEE SHEET C21 FOR PUBLIC INFRASTRUCTURE PLANS FOR PUBLIC STORM DRAINAGE SYSTEM.

3. SEE LANDSCAPE AND ARCHITECTURAL PLANS FOR DETAILED LOCATIONS OF PRIVATE DRAIN INLETS AND ROOF DOWNSPOUTS. INSTALL WYES AND RISERS FOR DOWNSPOUTS AT THE TIME THE MAIN IS INSTALLED.

4. ALL PRIVATE DRAINS UNDER BUILDINGS SHALL CONFORM TO THE REQUIREMENTS OF THE LOCALLY RECOGNIZED BUILDING CODES. PVC SCH. 40 SHALL BE USED UNDER BUILDINGS AND PVC SDR 35 SHALL BE USED IN ALL OTHER CASES.

5. SPECIFIC ROUTING OF DRAINS MAY BE MODIFIED IN THE FIELD AT THE DIRECTION OF THE OWNER OR LANDSCAPE ARCHITECT AS LONG AS THE INDICATED SIZES AND SLOPES ARE MAINTAINED.

6. CLEANOUTS SHALL BE INSTALLED AT APPROXIMATELY 100' INTERVALS AND AT ALL CHANGES IN ALIGNMENT. LOCATE CLEANOUTS IN PLANTING AREAS TO THE EXTENT POSSIBLE.

7. ALL CONNECTIONS BETWEEN DRAINS SHALL BE FACTORY WYES. ALL BENDS SHALL BE 45 DEGREE FACTORY ELBOWS.

8. PRIVATE DRAINS IN THE MEWS TO BE TESTED PER NCTCOG STANDARD SPECIFICATIONS.

BENCHMARKS:

BM#5
"□" CUT ON 8' INLET ON NORTH CURB LINE OF GOODMAN AVE. ±75' EAST OF PASCHAL PLACE. ELEV. 629.98

BM#6
"□" CUT AT ℄ OF 8' INLET AT THE SOUTHWEST CORNER OF MORRIS AVE. AND WITT PLACE. ELEV. 627.29

BM#7
"□" CUT AT WEST CORNER OF ADDISON THEATRE CENTRE PARKING LOT. SECOND ENTRANCE NORTH OF ADDISON RD. ELEV. 637.66

RECORD DRAWING

THIS DRAWING HAS BEEN MODIFIED FROM THE ORIGINAL TO SHOW ONLY THE FIELD CHANGES AND ADJUSTMENTS MADE DURING CONSTRUCTION BY THE CONTRACTOR WHICH WERE DOCUMENTED AND FURNISHED TO THE ENGINEER FOR THE PURPOSE OF PREPARING THESE RECORD DRAWINGS. FIELD INSPECTION OF CONSTRUCTION WAS PERFORMED BY OTHERS. TO THE BEST OF OUR KNOWLEDGE AND UNDERSTANDING THESE RECORD DRAWINGS REPRESENT THE "AS-BUILT" CONDITIONS.

STATE OF TEXAS
KEVIN N. CARLSON
89232
REGISTERED PROFESSIONAL ENGINEER
1-9-09

STORM WATER PLAN
BLDG. 3

ADDISON RESIDENTIAL

TOWN OF ADDISON, TEXAS

Huitt - Zollars, Inc.
3131 Mckinney Ave., Suite 600, Dallas, TX 75204
Phone (214) 871-3311/Fax (214) 871-0757

DESIGN	CHECKED	APPR.	SCALE	DATE	PROJECT NO.	NO.
HZI	HZI	DEM	1"=20'	11/20/08		C24

h:\proj\01340801\dgn\3629ST04.DGN

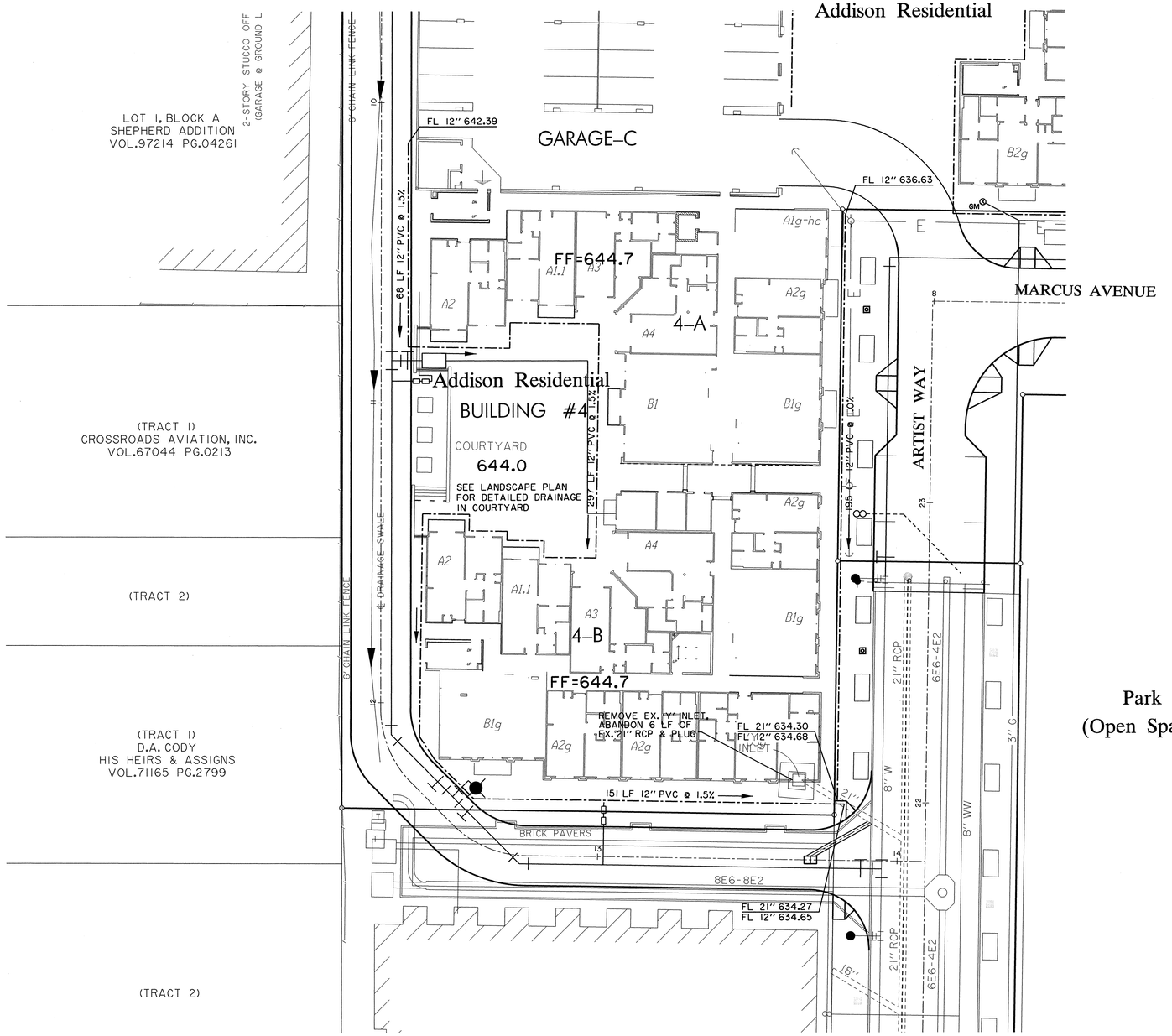

N

SCALE IN FEET
0 10 20 30 40
SCALE: 1" = 20'

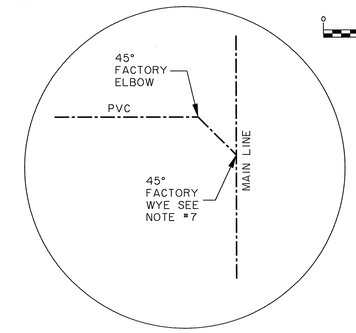

NOTES:

1. PRIVATE DRAINS ARE TO BE LOCATED AS SHOWN IN TYPICAL SECTIONS AND ON PLANS. THE HORIZONTAL LOCATION IS A GUIDE AND MAY BE ADJUSTED AS NEEDED TO AVOID CONFLICTS.

2. SEE SHEET C21 FOR PUBLIC INFRASTRUCTURE PLANS FOR PUBLIC STORM DRAINAGE SYSTEM.

3. SEE LANDSCAPE AND ARCHITECTURAL PLANS FOR DETAILED LOCATIONS OF PRIVATE DRAIN INLETS AND ROOF DOWNSPOUTS. INSTALL WYES AND RISERS FOR DOWNSPOUTS AT THE TIME THE MAIN IS INSTALLED.

4. ALL PRIVATE DRAINS UNDER BUILDINGS SHALL CONFORM TO THE REQUIREMENTS OF THE LOCALLY RECOGNIZED BUILDING CODES. PVC SCH. 40 SHALL BE USED UNDER BUILDINGS AND PVC SDR 35 SHALL BE USED IN ALL OTHER CASES.

5. SPECIFIC ROUTING OF DRAINS MAY BE MODIFIED IN THE FIELD AT THE DIRECTION OF THE OWNER OR LANDSCAPE ARCHITECT AS LONG AS THE INDICATED SIZES AND SLOPES ARE MAINTAINED.

6. CLEANOUTS SHALL BE INSTALLED AT APPROXIMATELY 100' INTERVALS AND AT ALL CHANGES IN ALIGNMENT. LOCATE CLEANOUTS IN PLANTING AREAS TO THE EXTENT POSSIBLE.

7. ALL CONNECTIONS BETWEEN DRAINS SHALL BE FACTORY WYES. ALL BENDS SHALL BE 45 DEGREE FACTORY ELBOWS.

8. PRIVATE DRAINS IN THE MEWS TO BE TESTED PER NCTCOG STANDARD SPECIFICATIONS.

BENCHMARKS:

BM#5
"□" CUT ON 8' INLET ON NORTH CURB LINE OF GOODMAN AVE. ±75' EAST OF PASCHAL PLACE. ELEV. 629.98

BM#6
"□" CUT AT ℄ OF 8' INLET AT THE SOUTHWEST CORNER OF MORRIS AVE. AND WITT PLACE. ELEV. 627.29

BM#7
"□" CUT AT WEST CORNER OF ADDISON THEATRE CENTRE PARKING LOT, SECOND ENTRANCE NORTH OF ADDISON RD. ELEV. 637.66

RECORD DRAWING

THIS DRAWING HAS BEEN MODIFIED FROM THE ORIGINAL TO SHOW ONLY THE FIELD CHANGES AND ADJUSTMENTS MADE DURING CONSTRUCTION BY THE CONTRACTOR WHICH WERE DOCUMENTED AND FURNISHED TO THE ENGINEER FOR THE PURPOSE OF PREPARING THESE RECORD DRAWINGS. FIELD INSPECTION OF CONSTRUCTION WAS PERFORMED BY OTHERS. TO THE BEST OF OUR KNOWLEDGE AND UNDERSTANDING THESE RECORD DRAWINGS REPRESENT THE "AS-BUILT" CONDITIONS.

STATE OF TEXAS
KEVIN N. CARLSON
89232
REGISTERED PROFESSIONAL ENGINEER
1-9-09

STORM WATER PLAN
BLDG. 4

ADDISON RESIDENTIAL

TOWN OF ADDISON, TEXAS

Huitt - Zollars, Inc.
3131 Mckinney Ave., Suite 600, Dallas, TX 75204
Phone (214) 871-3311/Fax (214) 871-0757

DESIGN	CHECKED	APPR.	SCALE	DATE	PROJECT NO.	NO.
HZI	HZI	DEM	1"=20'	11/20/08		C25

h:\proj\0134080l\dgn\3629ST05.DGN

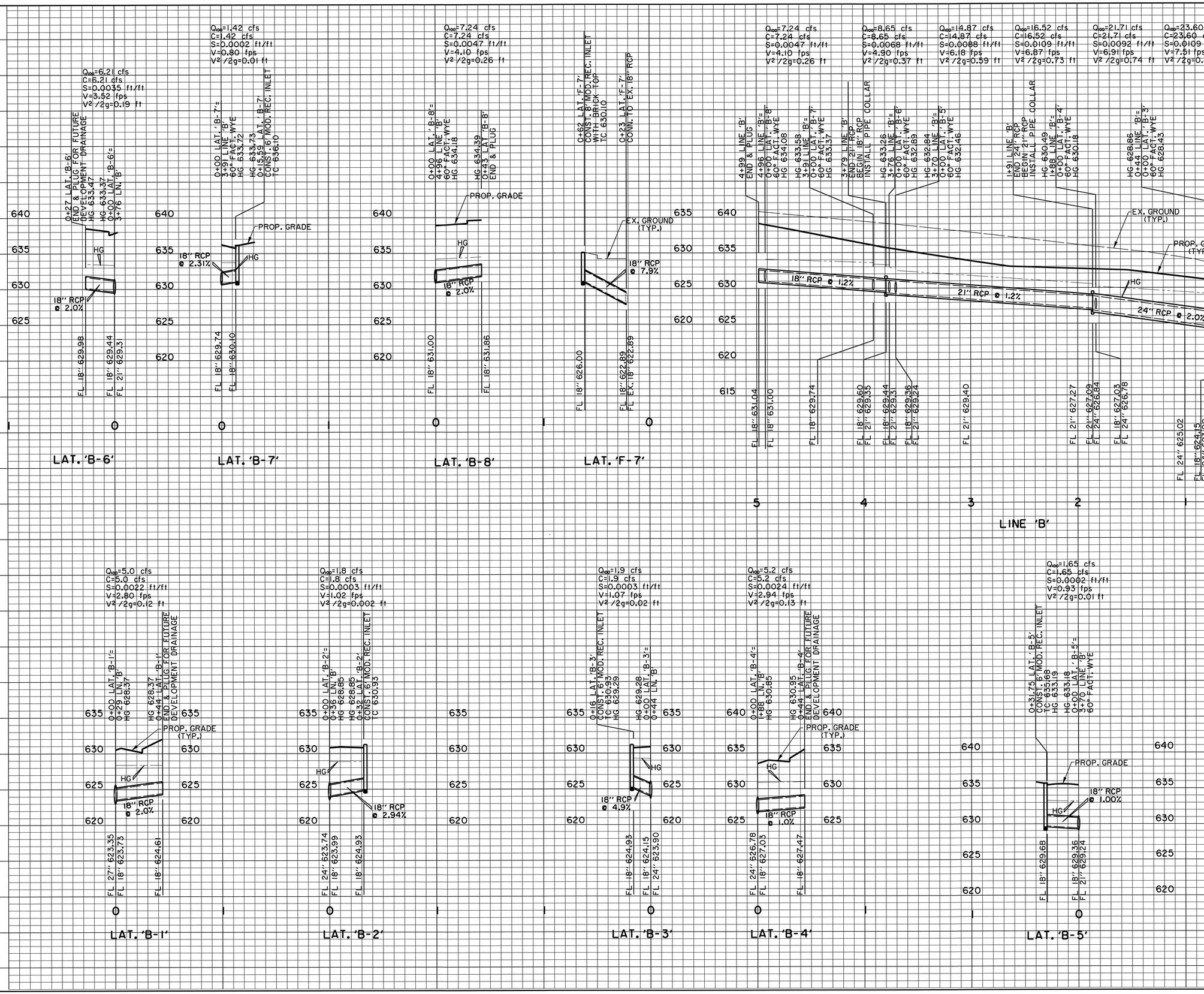

BENCHMARKS:

BM#5
"□" CUT ON 8' INLET ON NORTH CURB LINE OF GOODMAN AVE. ±75' EAST OF PASCHAL PLACE. ELEV. 629.98

BM#6
"□" CUT AT ℄ OF 8' INLET AT THE SOUTHWEST CORNER OF MORRIS AVE. AND WITT PLACE. ELEV. 627.29

BM#7
"□" CUT AT WEST CORNER OF ADDISON THEATRE CENTRE PARKING LOT. SECOND ENTRANCE NORTH OF ADDISON RD. ELEV. 637.66

STATE OF TEXAS
KEVIN N. CARLSON
89232
REGISTERED PROFESSIONAL ENGINEER
1-9-09

RECORD DRAWING

THIS DRAWING HAS BEEN MODIFIED FROM THE ORIGINAL TO SHOW ONLY THE FIELD CHANGES AND ADJUSTMENTS MADE DURING CONSTRUCTION BY THE CONTRACTOR WHICH WERE DOCUMENTED AND FURNISHED TO THE ENGINEER FOR THE PURPOSE OF PREPARING THESE RECORD DRAWINGS. FIELD INSPECTION OF CONSTRUCTION WAS PERFORMED BY OTHERS. TO THE BEST OF OUR KNOWLEDGE AND UNDERSTANDING THESE RECORD DRAWINGS REPRESENT THE "AS-BUILT" CONDITIONS.

STORM WATER PROFILES

ADDISON RESIDENTIAL

TOWN OF ADDISON, TEXAS

Huitt - Zollars, Inc.
3131 Mckinney Ave., Suite 600, Dallas, TX 75204
Phone (214) 871-3311/Fax (214) 871-0757

DESIGN	CHECKED	APPR.	SCALE	DATE	PROJECT NO.	NO.
HZI	HZI	DEM	H: 1"=40' V: 1"=6'	11/20/08		C26

h:\proj\0134080l\dgn\3629UTP02.DGN

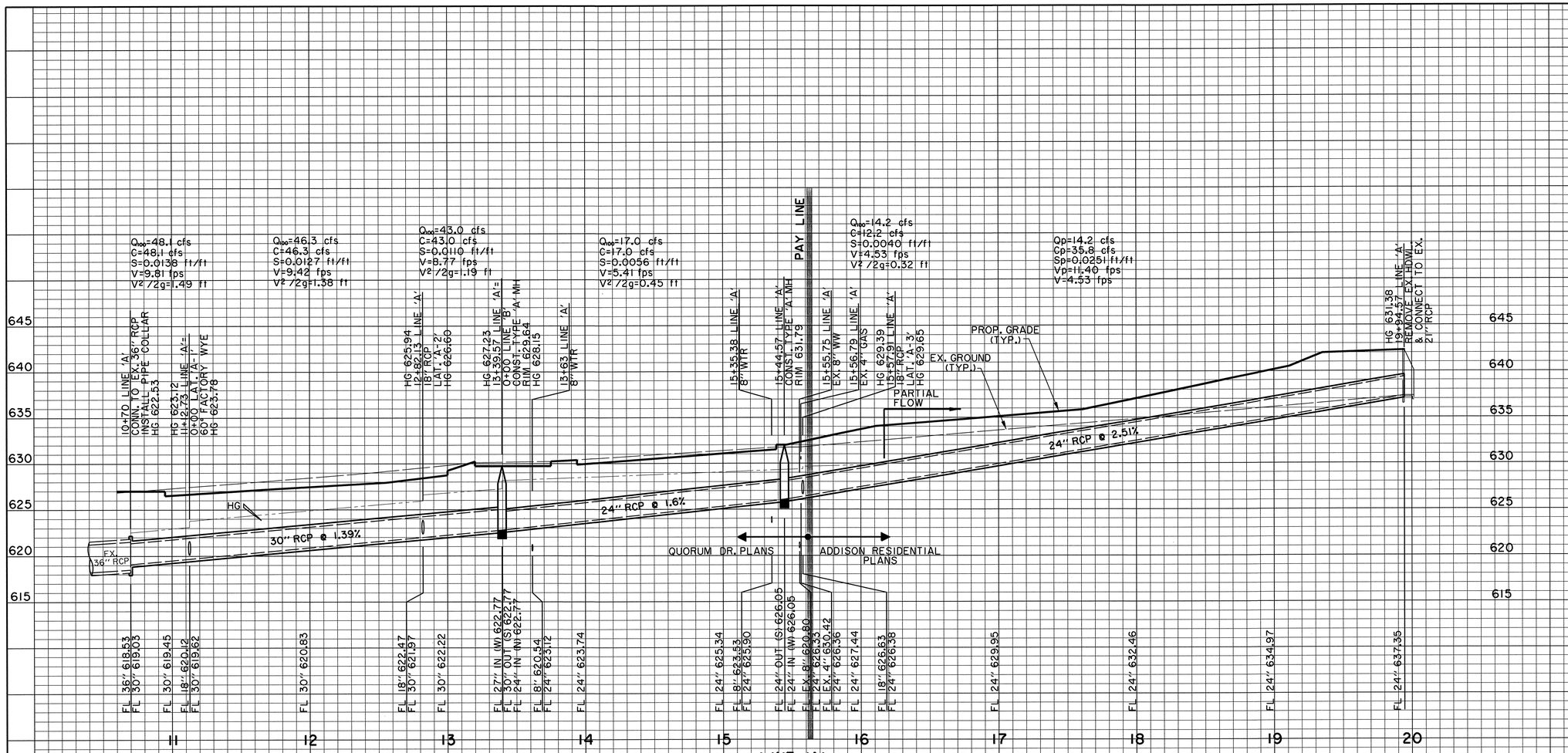

BENCHMARKS:

BM#5
"□" CUT ON 8' INLET ON NORTH CURB LINE OF GOODMAN AVE. ±75' EAST OF PASCHAL PLACE.
ELEV. 629.98

BM#6
"□" CUT AT ℄ OF 8' INLET AT THE SOUTHWEST CORNER OF MORRIS AVE. AND WITT PLACE.
ELEV. 627.29

BM#7
"□" CUT AT WEST CORNER OF ADDISON THEATRE CENTRE PARKING LOT, SECOND ENTRANCE NORTH OF ADDISON RD.
ELEV. 637.66

STATE OF TEXAS
KEVIN N. CARLSON
89232
REGISTERED PROFESSIONAL ENGINEER
1-9-09

RECORD DRAWING

THIS DRAWING HAS BEEN MODIFIED FROM THE ORIGINAL TO SHOW ONLY THE FIELD CHANGES AND ADJUSTMENTS MADE DURING CONSTRUCTION BY THE CONTRACTOR WHICH WERE DOCUMENTED AND FURNISHED TO THE ENGINEER FOR THE PURPOSE OF PREPARING THESE RECORD DRAWINGS. FIELD INSPECTION OF CONSTRUCTION WAS PERFORMED BY OTHERS. TO THE BEST OF OUR KNOWLEDGE AND UNDERSTANDING THESE RECORD DRAWINGS REPRESENT THE "AS-BUILT" CONDITIONS.

STORM WATER PROFILES

ADDISON RESIDENTIAL

TOWN OF ADDISON, TEXAS

Huitt - Zollars, Inc.
3131 Mckinney Ave., Suite 600, Dallas, TX 75204
Phone (214) 871-3311/Fax (214) 871-0757

DESIGN	CHECKED	APPR.	SCALE	DATE	PROJECT NO.	NO.
HZI	HZI	DEM	H: 1"=40' V: 1"=6'	11/20/08		C27

h:\proj\01340801\dgn\3629UTP03.DGN

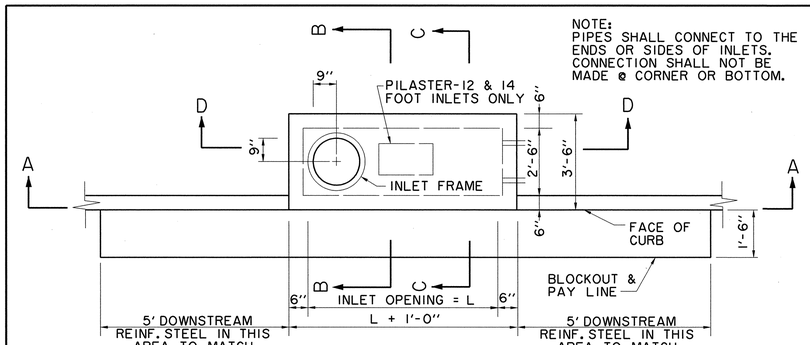

PLAN - STANDARD INLET

N.T.S.

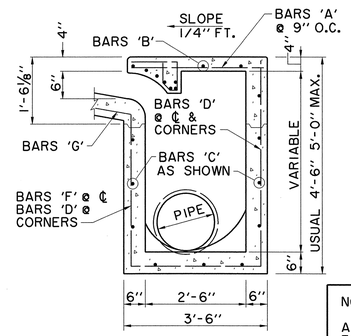

SECTION B-B

6' & 8' INLETS

NOTE:

ALL INLET & MANHOLE WALLS SHALL BE FORMED. POORING AGAINST EXPOSED EARTH WILL NOT BE PERMITTED.

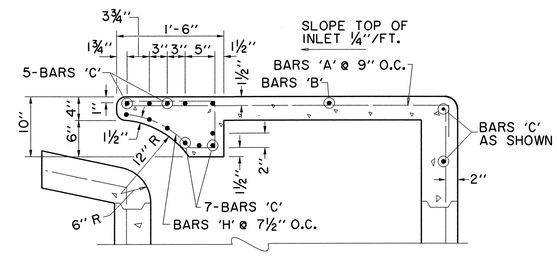

SECTION C-C - DETAIL

6' & 8' INLETS

N.T.S.

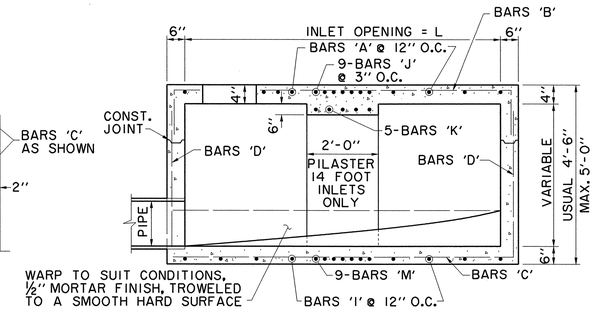

SECTION D-D

14' INLET

N.T.S.

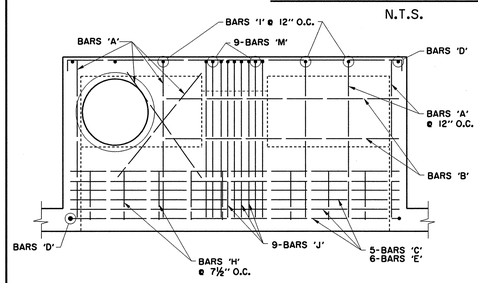

INLET PLAN

N.T.S.

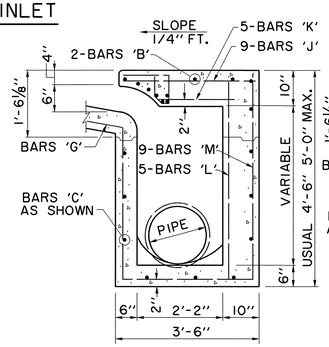

SECTION B-B

10' & 14' INLETS

N.T.S.

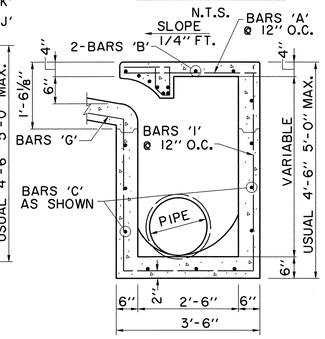

SECTION C-C

10' & 14' INLETS

N.T.S.

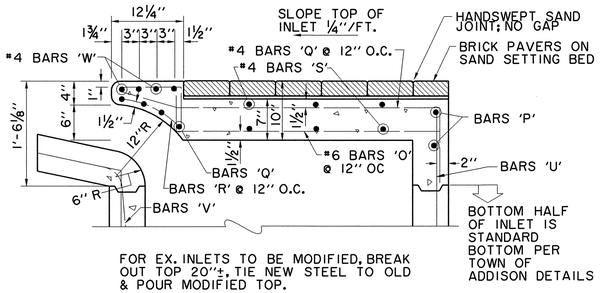

SECTION C-C - DETAIL

BRICK ON INLET

N.T.S.

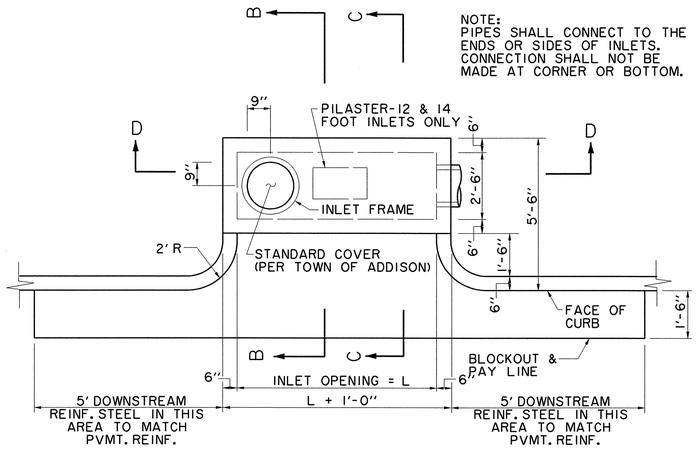

PLAN - MODIFIED RECESSED INLET

N.T.S.

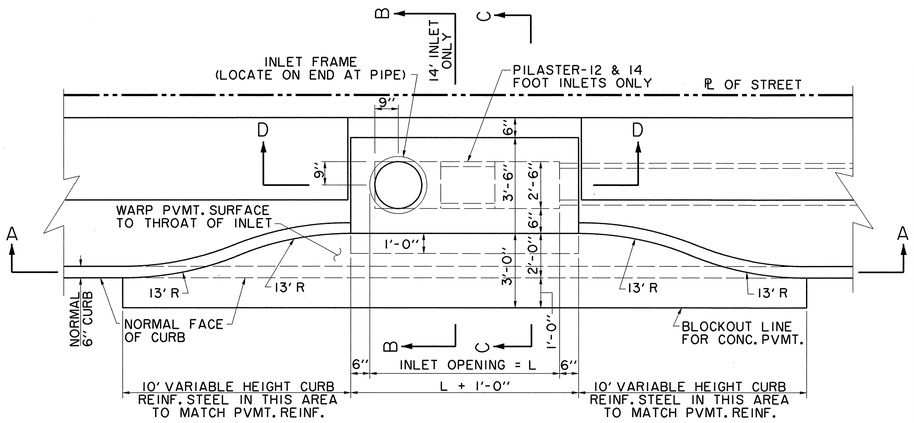

PLAN - RECESSED INLET

N.T.S.

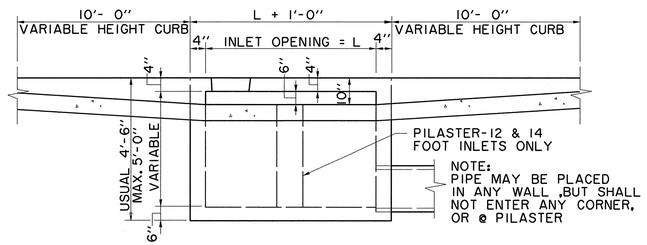

SECTION A-A - RECESSED AND STANDARD INLETS

6, 8, 10 & 14 FOOT INLETS

N.T.S.

REINFORCING STEEL SCHEDULE

DIMENSION SHOWN ARE FOR MAXIMUN SIZE INLETS

INLET LENGHT	BAR TYPE	BAR DIA. (⅛IN)	NO. REQ'D	BAR DIMENSIONS A	B	C
6	A	3	9	3'-2''	0'-3''	
	B	3	1	4'-10''		
	C	4	15	6'-8''	0'-6''	
	D	4	5	4'-8''		
	F	4	1	3'-2''		
	G	3	5	2'-0''	1'-3''	
	H	6	6	•	•	•
	N	3	3	3'-2''	3'-2''	3'-2''
8	A	3	12	3'-2''	0'-3''	
	B	3	1	6'-10''		
	C	4	15	8'-8''	0'-6''	
	D	4	5	4'-8''		
	F	4	1	3'-2''		
	G	3	5	2'-0''	1'-3''	
	H	6	8	•	•	•
	N	3	3	3'-2''	3'-2''	3'-2''
10	A	3	10	3'-2''	0'-3''	
	B	3	2	8'-10''		
	C	4	16	10'-8''	0'-6''	
	D	4	4	4'-8''		
	E	5	6	10'-8''		
	G	3	5	2'-0''	1'-3''	
	H	3	15	•	•	•
	I	4	8	4'-8''	3'-2''	3'-2''
	L	4	5	4'-3''		
12	A	3	12	3'-2''	0'-3''	
	B	3	2	10'-10''		
	C	4	16	12'-8''	0'-6''	
	D	4	4	4'-8''		
	E	5	6	12'-8''		
	G	3	5	2'-0''	1'-3''	
	H	3	18	•	•	•
	I	4	10	4'-8''	3'-2''	3'-2''
	J	5	9	3'-2''	1'-3''	
	K	4	5	2'-3''		
	L	4	5	4'-3''		
	M	5	9	4'-3''	3'-2''	3'-9''
14	A	3	14	3'-2''	0'-3''	
	B	3	2	10'-10''		
	C	4	16	14'-8''	0'-6''	
	D	4	4	4'-8''		
	E	5	6	14'-8''		
	G	3	5	2'-0''	1'-3''	
	H	3	21	•	•	•
	I	4	12	4'-8''	3'-2''	3'-2''
	J	5	9	3'-2''	1'-3''	
	K	4	5	2'-3''		
	L	4	5	4'-3''		
	M	5	9	4'-3''	3'-2''	3'-9''

• SEE DIAGRAM FOR DIMENSIONS

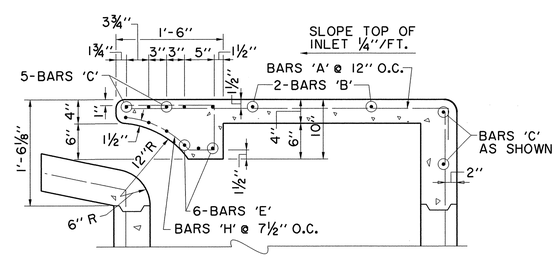

SECTION C-C - DETAIL

10' & 14' INLETS

N.T.S.

BAR DIAGRAMS

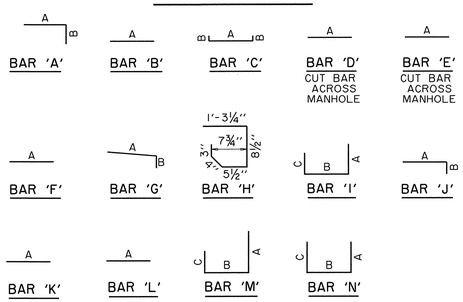

RECORD DRAWING

THIS DRAWING HAS BEEN MODIFIED FROM THE ORIGINAL TO SHOW ONLY THE FIELD CHANGES AND ADJUSTMENTS MADE DURING CONSTRUCTION BY THE CONTRACTOR WHICH WERE DOCUMENTED AND FURNISHED TO THE ENGINEER FOR THE PURPOSE OF PREPARING THESE RECORD DRAWINGS. FIELD INSPECTION OF CONSTRUCTION WAS PERFORMED BY OTHERS. TO THE BEST OF OUR KNOWLEDGE AND UNDERSTANDING THESE RECORD DRAWINGS REPRESENT THE "AS-BUILT" CONDITIONS.

STATE OF TEXAS
KEVIN N. CARLSON
89232
REGISTERED
PROFESSIONAL ENGINEER
1-9-09

STORM WATER DETAILS

ADDISON RESIDENTIAL

TOWN OF ADDISON, TEXAS

Huitt - Zollars, Inc.
3131 Mckinney Ave., Suite 600, Dallas, TX 75204
Phone (214) 871-3311/Fax (214) 871-0757

DESIGN	CHECKED	APPR.	SCALE	DATE	PROJECT NO.	NO.
HZI	HZI		N.T.S.	11/20/08		C28

h:\proj\01340801\dgn\3629STMDETI.DGN

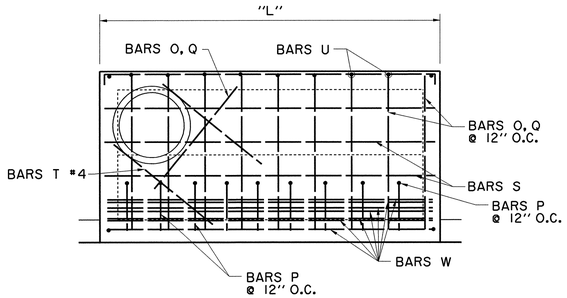

INLET PLAN
REINFORCING STEEL FOR BRICK ON INLET
N.T.S.

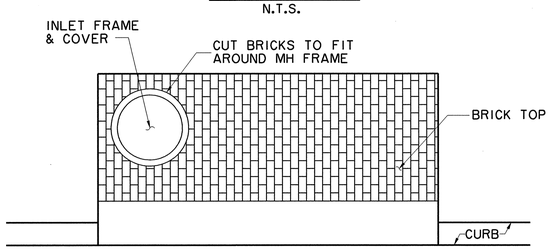

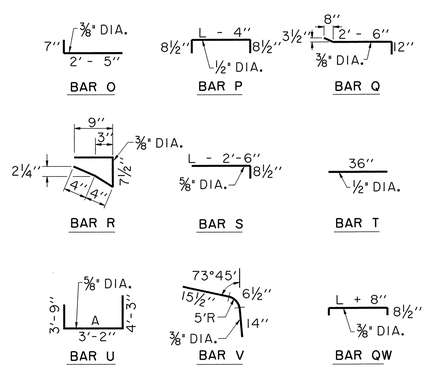

BAR DIAGRAMS (BRICK ON INLET)
N.T.S.

NOTE: BAR DESIGNATIONS AND DIMENSIONS ARE DIFFERENT FROM STEEL SCHEDULE FOR REGULAR INLETS.

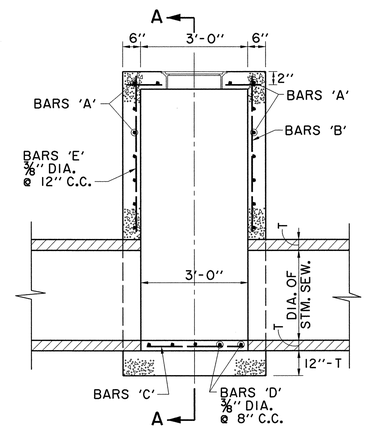

ELEVATION
N.T.S.

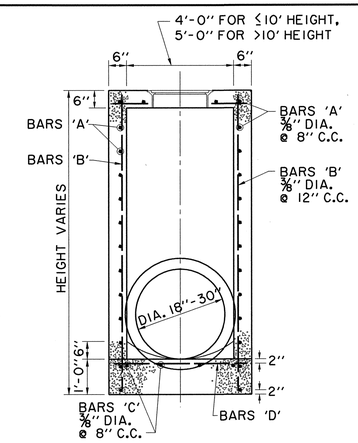

SECTION A-A
N.T.S.

TYPE A STORM SEWER MANHOLE
(FOR PIPE 18" TO 30" IN DIAMETER)

NOTE: STRUCTURAL CONCRETE TO BE MIN. 4200 psi UNLESS NOTED OTHERWISE

FRAME & COVER SHALL BE TOWN OF ADDISON STANDARD. AT A MINIMUM USE REXUS 24" MANHOLE FRAME & COVER.

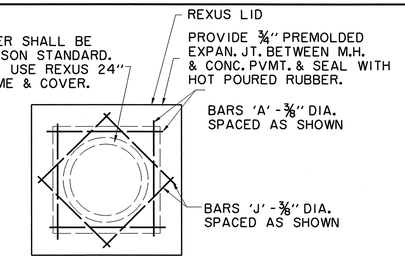

TOP PLAN
TYPE A & TYPE B STORM SEWER MANHOLE
N.T.S.

NOTE MAXIMUM PIPE SIZE TO BE USED 78"

NOTE: MANHOLES & INLETS GREATER THAN 4' IN DEPTH SHALL HAVE BASS & HAYES MODEL MA STEPS OR APPROVED EQUAL

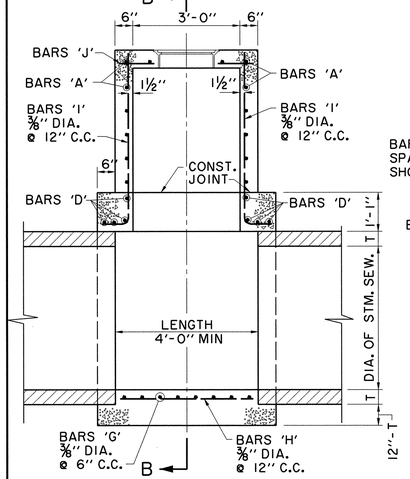

ELEVATION
N.T.S.

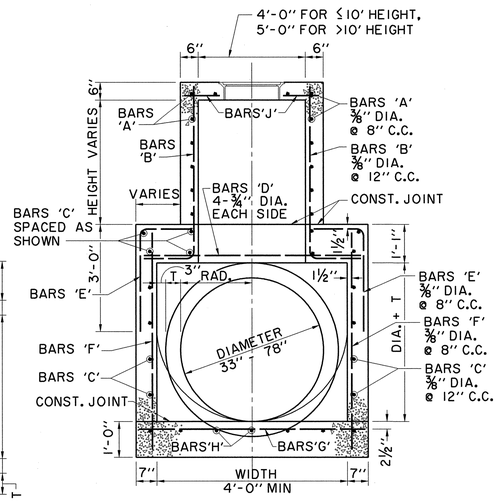

SECTION B-B
N.T.S.

TYPE B STORM SEWER MANHOLE
(FOR PIPE 33" TO 78" IN DIAMETER)

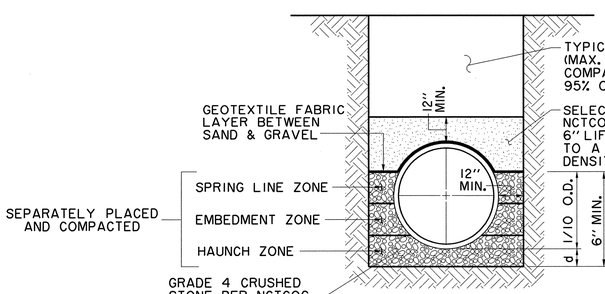

EMBEDMENT DETAIL FOR STORM SEWER
N.T.S.

DEPTH OF BEDDING MATERIAL BELOW PIPE

D (INSIDE DIAMETER)	d (MIN.)
27"	3"
≤30" TO 60"	4"
≥66"	6"

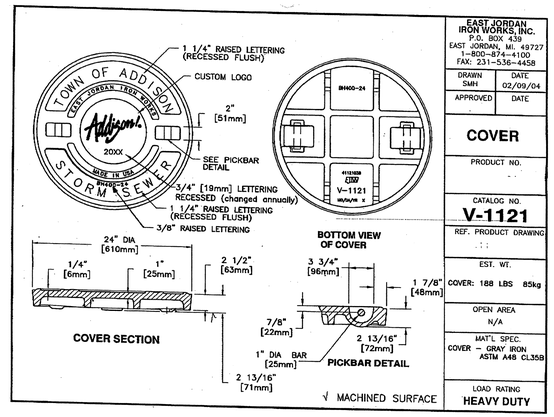

EAST JORDAN IRON WORKS, INC.
P.O. BOX 439
EAST JORDAN, MI. 49727
1-800-874-4100
FAX: 231-536-4458

DRAWN	DATE
SMH	02/09/04
APPROVED	DATE

COVER

PRODUCT NO. -

CATALOG NO. **V-1121**

REF. PRODUCT DRAWING -

EST. WT. COVER: 188 LBS 85kg

OPEN AREA N/A

MAT'L SPEC. COVER – GRAY IRON ASTM A48 CL35B

LOAD RATING **HEAVY DUTY**

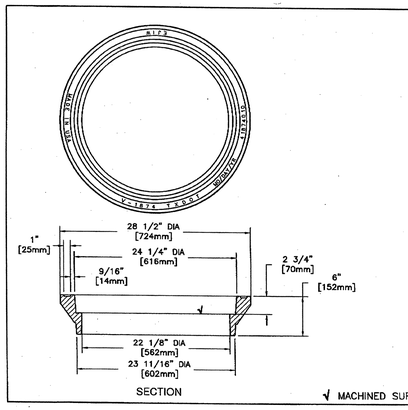

EAST JORDAN IRON WORKS, INC.
P.O. BOX 439
EAST JORDAN, MI. 49727
1-800-874-4100
FAX 231-536-4458

DRAWN	DATE
SBB	08/21/01
APPROVED	DATE

MANHOLE FRAME

PRODUCT NO. **41874010**

CATALOG NO. **V-1874**

REF. PRODUCT DRAWING 41874010

EST. WT. RING: 185 LBS 84kg

OPEN AREA N/A

MAT'L SPEC. RING – GRAY IRON ASTM A48 CL35

LOAD RATING HEAVY DUTY

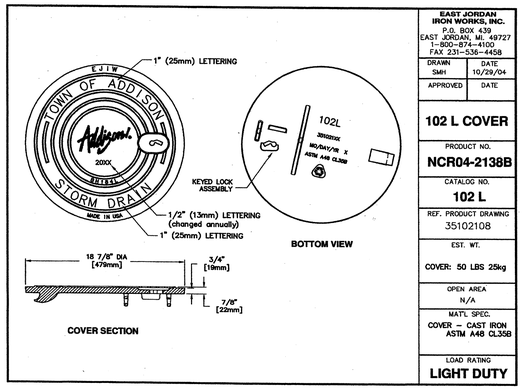

EAST JORDAN IRON WORKS, INC.
P.O. BOX 439
EAST JORDAN, MI. 49727
1-800-874-4100
FAX 231-536-4458

DRAWN	DATE
SMH	10/29/04
APPROVED	DATE

102 L COVER

PRODUCT NO. **NCR04-2138B**

CATALOG NO. **102 L**

REF. PRODUCT DRAWING 35102108

EST. WT. COVER: 50 LBS 25kg

OPEN AREA N/A

MAT'L SPEC. COVER – CAST IRON ASTM A48 CL35B

LOAD RATING **LIGHT DUTY**

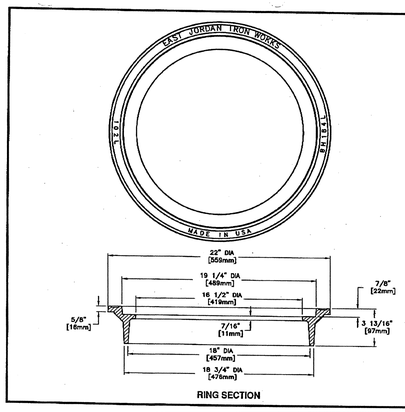

EAST JORDAN IRON WORKS, INC.
P.O. BOX 439
EAST JORDAN, MI. 49727
1-800-874-4100
FAX 231-536-4458

DRAWN	DATE
SMH	10/04/01
APPROVED	DATE

102L INLET RING

PRODUCT NO. **35202000**

CATALOG NO. **102L**

REF. PRODUCT DRAWING 35202000

EST. WT. FRAME: 50 LBS 23kg

OPEN AREA N/A

MAT'L SPEC. RING – GRAY IRON ASTM A48 CL35

LOAD RATING **HEAVY DUTY**

STATE OF TEXAS
KEVIN N. CARLSON
89232
REGISTERED PROFESSIONAL ENGINEER
1-9-09

RECORD DRAWING

THIS DRAWING HAS BEEN MODIFIED FROM THE ORIGINAL TO SHOW ONLY THE FIELD CHANGES AND ADJUSTMENTS MADE DURING CONSTRUCTION BY THE CONTRACTOR WHICH WERE DOCUMENTED AND FURNISHED TO THE ENGINEER FOR THE PURPOSE OF PREPARING THESE RECORD DRAWINGS. FIELD INSPECTION OF CONSTRUCTION WAS PERFORMED BY OTHERS. TO THE BEST OF OUR KNOWLEDGE AND UNDERSTANDING THESE RECORD DRAWINGS REPRESENT THE "AS-BUILT" CONDITIONS.

NOTE:

ALL INLET & MANHOLE WALLS SHALL BE FORMED. POURING AGAINST EXPOSED EARTH WILL NOT BE PERMITTED.

STORM WATER DETAILS

ADDISON RESIDENTIAL

TOWN OF ADDISON, TEXAS

Huitt - Zollars, Inc.
3131 Mckinney Ave., Suite 600, Dallas, TX 75204
Phone (214) 871-3311/Fax (214) 871-0757

DESIGN	CHECKED	APPR.	SCALE	DATE	PROJECT NO.	NO.
HZI	HZI		N.T.S.	11/20/08		C29

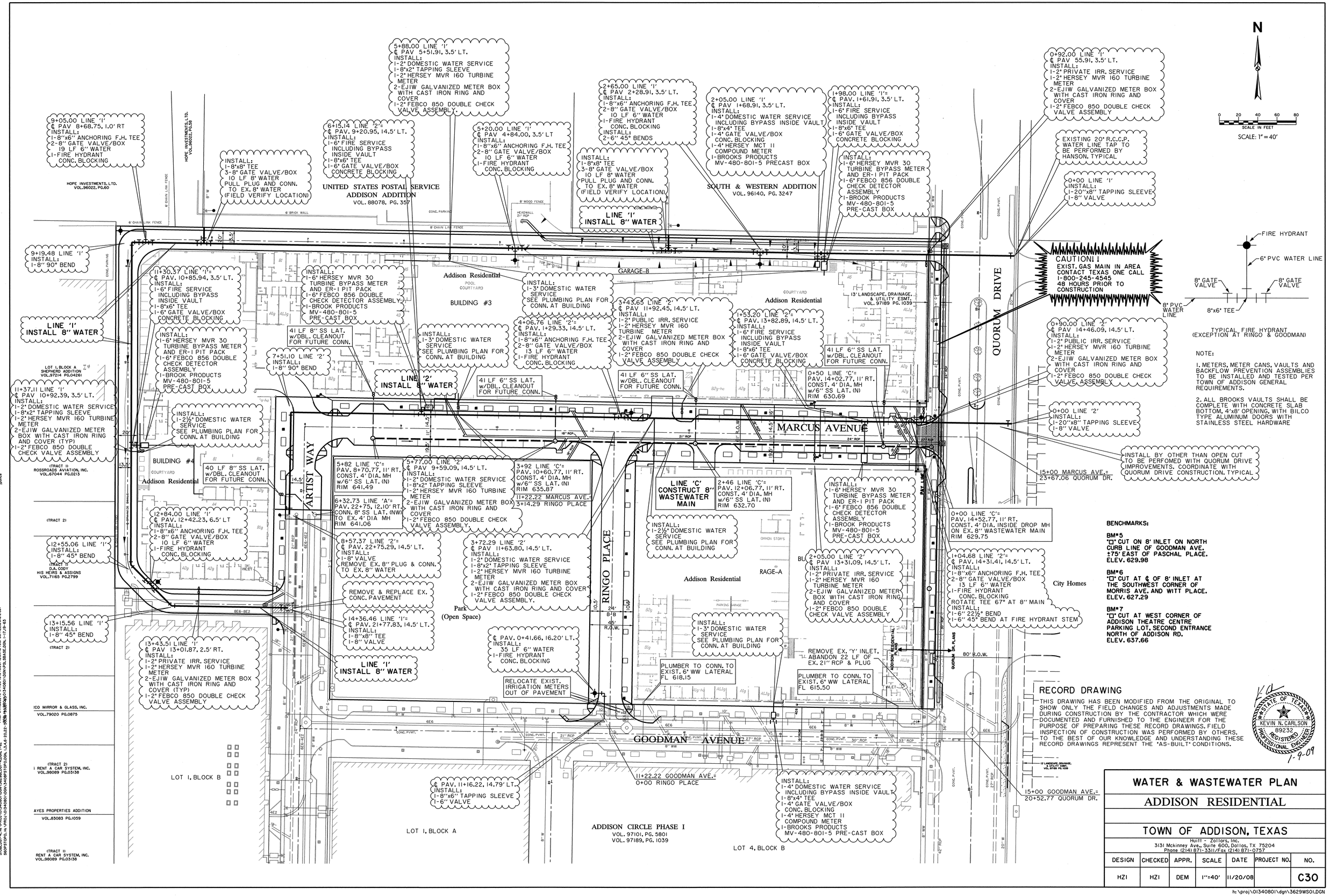
N
SCALE: 1" = 40'
9+05.00 LINE '1'
℄ PAV 8+68.75, 1.0' RT
INSTALL:
1-8"x6" ANCHORING F.H. TEE
2-8" GATE VALVE/BOX
19 LF 6" WATER
1-FIRE HYDRANT
CONC. BLOCKING
HOPE INVESTMENTS, LTD.
VOL.96022, PG.60
INSTALL:
1-8"x8" TEE
3-8" GATE VALVE/BOX
10 LF 8" WATER
PULL PLUG AND CONN.
TO EX. 8" WATER
(FIELD VERIFY LOCATION)
6+15.14 LINE '2'=
℄ PAV. 9+20.95, 14.5' LT.
INSTALL:
1-6" FIRE SERVICE
INCLUDING BYPASS
INSIDE VAULT
1-8"x6" TEE
1-6" GATE VALVE/BOX
CONCRETE BLOCKING
UNITED STATES POSTAL SERVICE
ADDISON ADDITION
VOL. 88078, PG. 357
5+88.00 LINE '1'
℄ PAV 5+51.91, 3.5' LT.
INSTALL:
1-2" DOMESTIC WATER SERVICE
1-8"x2" TAPPING SLEEVE
1-2" HERSEY MVR 160 TURBINE
METER
2-EJIW GALVANIZED METER BOX
WITH CAST IRON RING AND
COVER
1-2" FEBCO 850 DOUBLE CHECK
VALVE ASSEMBLY.
5+20.00 LINE '1'
℄ PAV 4+84.00, 3.5' LT
INSTALL:
1-8"x6" ANCHORING F.H. TEE
2-8" GATE VALVE/BOX
10 LF 6" WATER
1-FIRE HYDRANT
CONC. BLOCKING
2+65.00 LINE '1'
℄ PAV 2+28.91, 3.5' LT.
INSTALL:
1-8"x6" ANCHORING F.H. TEE
2-8" GATE VALVE/BOX
10 LF 6" WATER
1-FIRE HYDRANT
CONC. BLOCKING
INSTALL:
2-6" 45° BENDS
INSTALL:
1-8"x8" TEE
3-8" GATE VALVE/BOX
10 LF 8" WATER
PULL PLUG AND CONN.
TO EX. 8" WATER
(FIELD VERIFY LOCATION)
LINE '1'
INSTALL 8" WATER
2+05.00 LINE '1'
℄ PAV 1+68.91, 3.5' LT.
INSTALL:
1-4" DOMESTIC WATER SERVICE
INCLUDING BYPASS INSIDE VAULT
1-8"x4" TEE
1-4" GATE VALVE/BOX
CONC. BLOCKING
1-4" HERSEY MCT II
COMPOUND METER
1-BROOKS PRODUCTS
MV-480-801-5 PRECAST BOX
SOUTH & WESTERN ADDITION
VOL. 96140, PG. 3247
1+98.00 LINE '1'=
℄ PAV. 1+61.91, 3.5' LT.
INSTALL:
1-6" FIRE SERVICE
INCLUDING BYPASS
INSIDE VAULT
1-8"x6" TEE
1-6" GATE VALVE/BOX
CONCRETE BLOCKING
INSTALL:
1-6" HERSEY MVR 30
TURBINE BYPASS METER
AND ER-1 PIT PACK
1-6" FEBCO 856 DOUBLE
CHECK DETECTOR
ASSEMBLY
1-BROOK PRODUCTS
MV-480-801-5
PRE-CAST BOX
0+92.00 LINE '1'
℄ PAV 55.91, 3.5' LT.
INSTALL:
1-2" PRIVATE IRR. SERVICE
1-2" HERSEY MVR 160 TURBINE
METER
2-EJIW GALVANIZED METER BOX
WITH CAST IRON RING AND
COVER
1-2" FEBCO 850 DOUBLE CHECK
VALVE ASSEMBLY
EXISTING 20" R.C.C.P.
WATER LINE TAP TO
BE PERFORMED BY
HANSON, TYPICAL
0+00 LINE '1'
INSTALL:
1-20"x8" TAPPING SLEEVE
1-8" VALVE
9+19.48 LINE '1'
INSTALL:
1-8" 90° BEND
11+30.37 LINE '1'=
℄ PAV. 10+85.94, 3.5' LT.
INSTALL:
1-6" FIRE SERVICE
INCLUDING BYPASS
INSIDE VAULT
1-8"x6" TEE
1-6" GATE VALVE/BOX
CONCRETE BLOCKING
INSTALL:
1-6" HERSEY MVR 30
TURBINE BYPASS METER
AND ER-1 PIT PACK
1-6" FEBCO 856 DOUBLE
CHECK DETECTOR ASSEMBLY
1-BROOK PRODUCTS
MV-480-801-5
PRE-CAST BOX
Addison Residential
POOL
COURTYARD
BUILDING #3
GARAGE-B
INSTALL:
1-3" DOMESTIC WATER
SERVICE
SEE PLUMBING PLAN FOR
CONN. AT BUILDING
3+43.65 LINE '2'
℄ PAV 11+92.45, 14.5' LT.
INSTALL:
1-2" PUBLIC IRR. SERVICE
1-2" HERSEY MVR 160
TURBINE METER
2-EJIW GALVANIZED METER BOX
WITH CAST IRON RING AND
COVER
1-2" FEBCO 850 DOUBLE CHECK
VALVE ASSEMBLY
1+53.20 LINE '2'=
℄ PAV. 13+82.89, 14.5' LT.
INSTALL:
1-6" FIRE SERVICE
INCLUDING BYPASS
INSIDE VAULT
1-8"x6" TEE
1-6" GATE VALVE/BOX
CONCRETE BLOCKING
13' LANDSCAPE, DRAINAGE,
& UTILITY ESMT.
VOL. 97189 PG. 1039
CAUTION!!
EXIST. GAS MAIN IN AREA
CONTACT TEXAS ONE CALL
1-800-245-4545
48 HOURS PRIOR TO
CONSTRUCTION
FIRE HYDRANT
6" PVC WATER LINE
8" GATE VALVE
8" GATE VALVE
8" PVC WATER LINE
8"x6" TEE
TYPICAL FIRE HYDRANT
(EXCEPTION AT RINGO & GOODMAN)
NOTE:
1. METERS, METER CANS, VAULTS AND BACKFLOW PREVENTION ASSEMBLIES TO BE INSTALLED AND TESTED PER TOWN OF ADDISON GENERAL REQUIREMENTS.
2. ALL BROOKS VAULTS SHALL BE COMPLETE WITH CONCRETE SLAB BOTTOM, 4'x8' OPENING, WITH BILCO TYPE ALUMINUM DOORS WITH STAINLESS STEEL HARDWARE
LINE '1'
INSTALL 8" WATER
LOT 1, BLOCK A
SHEPHERD ADDITION
VOL.97214 PG.04261
11+37.11 LINE '1'
℄ PAV 10+92.39, 3.5' LT.
INSTALL:
1-2" DOMESTIC WATER SERVICE
1-8"x2" TAPPING SLEEVE
1-2" HERSEY MVR 160 TURBINE
METER
2-EJIW GALVANIZED METER
BOX WITH CAST IRON RING
AND COVER (TYP)
1-2" FEBCO 850 DOUBLE
CHECK VALVE ASSEMBLY
(TRACT 1)
ROSSROADS AVIATION, INC.
VOL.67044 PG.0213
INSTALL:
1-2½" DOMESTIC WATER
SERVICE
SEE PLUMBING PLAN FOR
CONN. AT BUILDING
BUILDING #4
COURTYARD
Addison Residential
41 LF 8" SS LAT.
w/DBL. CLEANOUT
FOR FUTURE CONN.
7+51.10 LINE '2'
INSTALL:
1-8" 90° BEND
LINE '2'
INSTALL 8" WATER
41 LF 6" SS LAT.
w/DBL. CLEANOUT
FOR FUTURE CONN.
INSTALL:
1-3" DOMESTIC WATER
SERVICE
SEE PLUMBING PLAN FOR
CONN. AT BUILDING
4+06.76 LINE '2'=
℄ PAV. 1+29.33, 14.5' LT.
INSTALL:
1-8"x6" ANCHORING F.H. TEE
2-8" GATE VALVE/BOX
13 LF 6" WATER
1-FIRE HYDRANT
CONC. BLOCKING
41 LF 6" SS LAT.
w/DBL. CLEANOUT
FOR FUTURE CONN.
41 LF 6" SS LAT.
w/DBL. CLEANOUT
FOR FUTURE CONN.
0+50 LINE 'C'=
PAV. 14+02.77, 11' RT.
CONST. 4' DIA. MH
w/6" SS LAT. (N)
RIM 630.69
0+90.00 LINE '2'
℄ PAV 14+46.09, 14.5' LT.
INSTALL:
1-2" PUBLIC IRR. SERVICE
1-2" HERSEY MVR 160 TURBINE
METER
2-EJIW GALVANIZED METER BOX
WITH CAST IRON RING AND
COVER
1-2" FEBCO 850 DOUBLE CHECK
VALVE ASSEMBLY
0+00 LINE '2'
INSTALL:
1-20"x8" TAPPING SLEEVE
1-8" VALVE
INSTALL BY OTHER THAN OPEN CUT
TO BE PERFOMED WITH QUORUM DRIVE
IMPROVEMENTS. COORDINATE WITH
QUORUM DRIVE CONSTRUCTION. TYPICAL
MARCUS AVENUE
QUORUM DRIVE
15+00 MARCUS AVE.=
23+67.06 QUORUM DR.
ARTIST WAY
5+82 LINE 'C'=
PAV. 8+70.77, 11' RT.
CONST. 4' DIA. MH
w/6" SS LAT. (N)
RIM 641.49
6+32.73 LINE 'A'=
PAV. 22+75, 12.10' RT.
CONN. 8" SS LAT. (NW)
TO EX. 4' DIA MH
RIM 641.06
5+77.00 LINE '2'
℄ PAV 9+59.09, 14.5' LT.
INSTALL:
1-2" DOMESTIC WATER SERVICE
1-8"x2" TAPPING SLEEVE
1-2" HERSEY MVR 160 TURBINE
METER
2-EJIW GALVANIZED METER BOX
WITH CAST IRON RING AND
COVER
1-2" FEBCO 850 DOUBLE CHECK
VALVE ASSEMBLY.
3+92 LINE 'C'=
PAV. 10+60.77, 11' RT.
CONST. 4' DIA. MH
w/6" SS LAT. (N)
RIM 635.87
11+22.22 MARCUS AVE.=
3+14.29 RINGO PLACE
LINE 'C'
CONSTRUCT 8"
WASTEWATER
MAIN
2+46 LINE 'C'=
PAV. 12+06.77, 11' RT.
CONST. 4' DIA. MH
w/6" SS LAT. (N)
RIM 632.70
INSTALL:
1-6" HERSEY MVR 30
TURBINE BYPASS METER
AND ER-1 PIT PACK
1-6" FEBCO 856 DOUBLE
CHECK DETECTOR
ASSEMBLY
1-BROOK PRODUCTS
MV-480-801-5
PRE-CAST BOX
INSTALL:
1-2½" DOMESTIC WATER
SERVICE
SEE PLUMBING PLAN FOR
CONN. AT BUILDING
0+00 LINE 'C'=
PAV. 14+52.77, 11' RT.
CONST. 4' DIA. INSIDE DROP MH
ON EX. 8" WASTEWATER MAIN
RIM 629.75
12+84.00 LINE '1'
℄ PAV. 12+42.23, 6.5' LT
INSTALL:
1-8"x6" ANCHORING F.H. TEE
2-8" GATE VALVE/BOX
10 LF 6" WATER
1-FIRE HYDRANT
CONC. BLOCKING
(TRACT 2)
12+55.06 LINE '1'
INSTALL:
1-8" 45° BEND
(TRACT 1)
D.A. CODY
HIS HEIRS & ASSIGNS
VOL.71165 PG.2799
8+57.37 LINE '2'=
℄ PAV. 22+75.29, 14.5' LT.
INSTALL:
1-8" VALVE
REMOVE EX. 8" PLUG & CONN.
TO EX. 8" WATER
3+72.29 LINE '2'
℄ PAV 11+63.80, 14.5' LT.
INSTALL:
1-2" DOMESTIC WATER SERVICE
1-8"x2" TAPPING SLEEVE
1-2" HERSEY MVR 160 TURBINE
METER
2-EJIW GALVANIZED METER BOX
WITH CAST IRON RING AND COVER
1-2" FEBCO 850 DOUBLE CHECK
VALVE ASSEMBLY.
RINGO PLACE
Addison Residential
RAGE-A
QMMON STOR'S
PARKING GARAGE
2+05.00 LINE '2'
℄ PAV 13+31.09, 14.5' LT.
INSTALL:
1-2" PRIVATE IRR. SERVICE
1-2" HERSEY MVR 160
TURBINE METER
2-EJIW GALVANIZED METER
BOX WITH CAST IRON RING
AND COVER
1-2" FEBCO 850 DOUBLE
CHECK VALVE ASSEMBLY
1+04.68 LINE '2'=
℄ PAV. 14+31.41, 14.5' LT.
INSTALL:
1-8"x6" ANCHORING F.H. TEE
2-8" GATE VALVE/BOX
13 LF 6" WATER
1-FIRE HYDRANT
CONC. BLOCKING
ROTATE TEE 67° AT 8" MAIN
INSTALL:
1-6" 22½° BEND
1-6" 45° BEND AT FIRE HYDRANT STEM
City Homes
Park
(Open Space)
REMOVE & REPLACE EX.
CONC. PAVEMENT
14+36.46 LINE '1'=
℄ PAV. 21+77.83, 14.5' LT.
INSTALL:
1-8"x8" TEE
1-8" VALVE
℄ PAV. 0+41.66, 16.20' LT.
INSTALL:
35 LF 6" WATER
1-FIRE HYDRANT
CONC. BLOCKING
INSTALL:
1-3" DOMESTIC WATER
SERVICE
SEE PLUMBING PLAN FOR
CONN. AT BUILDING
13+15.56 LINE '1'
INSTALL:
1-8" 45° BEND
(TRACT 2)
13+43.51 LINE '1'
℄ PAV 13+01.87, 2.5' RT.
INSTALL:
1-2" PRIVATE IRR. SERVICE
1-2" HERSEY MVR 160 TURBINE
METER
2-EJIW GALVANIZED METER BOX
WITH CAST IRON RING AND
COVER (TYP)
1-2" FEBCO 850 DOUBLE CHECK
VALVE ASSEMBLY
LINE '1'
INSTALL 8" WATER
RELOCATE EXIST.
IRRIGATION METERS
OUT OF PAVEMENT
PLUMBER TO CONN. TO
EXIST. 6" WW LATERAL
FL 618.15
REMOVE EX. 'Y' INLET,
ABANDON 22 LF OF
EX. 21" RCP & PLUG
PLUMBER TO CONN. TO
EXIST. 6" WW LATERAL
FL 615.50
ADDISON CIRCLE DRIVE (PLANS)
QUORUM DR. (PLANS)
80' R.O.W.
GOODMAN AVENUE
LOT 1, BLOCK B
LOT 1, BLOCK A
℄ PAV. 11+16.22, 14.79' LT.
INSTALL:
1-8"x6" TAPPING SLEEVE
1-6" VALVE
11+22.22 GOODMAN AVE.=
0+00 RINGO PLACE
ADDISON CIRCLE PHASE I
VOL. 97101, PG. 5801
VOL. 97189, PG. 1039
INSTALL:
1-4" DOMESTIC WATER SERVICE
INCLUDING BYPASS INSIDE VAULT
1-8"x4" TEE
1-4" GATE VALVE/BOX
CONC. BLOCKING
1-4" HERSEY MCT II
COMPOUND METER
1-BROOKS PRODUCTS
MV-480-801-5 PRE-CAST BOX
LOT 4, BLOCK B
15+00 GOODMAN AVE.=
20+52.77 QUORUM DR.
BENCHMARKS:
BM#5
"□" CUT ON 8' INLET ON NORTH CURB LINE OF GOODMAN AVE. ±75' EAST OF PASCHAL PLACE. ELEV. 629.98
BM#6
"□" CUT AT ℄ OF 8' INLET AT THE SOUTHWEST CORNER OF MORRIS AVE. AND WITT PLACE. ELEV. 627.29
BM#7
"□" CUT AT WEST CORNER OF ADDISON THEATRE CENTRE PARKING LOT, SECOND ENTRANCE NORTH OF ADDISON RD. ELEV. 637.66
RECORD DRAWING
THIS DRAWING HAS BEEN MODIFIED FROM THE ORIGINAL TO SHOW ONLY THE FIELD CHANGES AND ADJUSTMENTS MADE DURING CONSTRUCTION BY THE CONTRACTOR WHICH WERE DOCUMENTED AND FURNISHED TO THE ENGINEER FOR THE PURPOSE OF PREPARING THESE RECORD DRAWINGS. FIELD INSPECTION OF CONSTRUCTION WAS PERFORMED BY OTHERS. TO THE BEST OF OUR KNOWLEDGE AND UNDERSTANDING THESE RECORD DRAWINGS REPRESENT THE "AS-BUILT" CONDITIONS.
STATE OF TEXAS
KEVIN N. CARLSON
89232
REGISTERED
PROFESSIONAL ENGINEER
1-9-09
WATER & WASTEWATER PLAN
ADDISON RESIDENTIAL
TOWN OF ADDISON, TEXAS
Huitt - Zollars, Inc.
3131 Mckinney Ave., Suite 600, Dallas, TX 75204
Phone (214) 871-3311/Fax (214) 871-0757
DESIGN HZI
CHECKED HZI
APPR. DEM
SCALE 1"=40'
DATE 11/20/08
PROJECT NO.
NO. C30
h:\proj\01340801\dgn\3629WS01.DGN

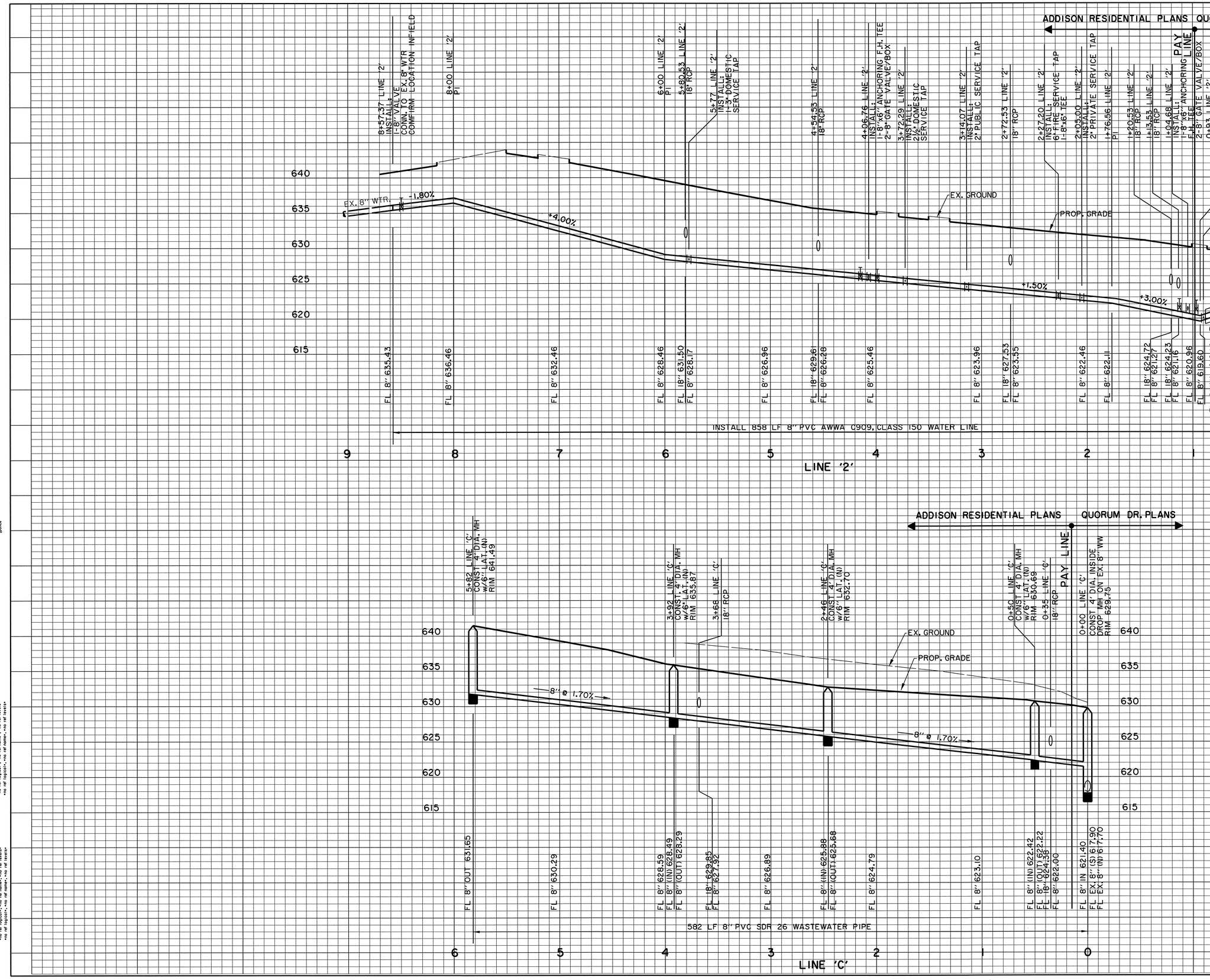

BENCHMARKS:

BM#5
"C" CUT ON 8' INLET ON NORTH CURB LINE OF GOODMAN AVE. ±75' EAST OF PASCHAL PLACE.
ELEV. 629.98

BM#6
"C" CUT AT ℄ OF 8' INLET AT THE SOUTHWEST CORNER OF MORRIS AVE. AND WITT PLACE.
ELEV. 627.29

BM#7
"C" CUT AT WEST CORNER OF ADDISON THEATRE CENTRE PARKING LOT, SECOND ENTRANCE NORTH OF ADDISON RD.
ELEV. 637.66

STATE OF TEXAS
KEVIN N. CARLSON
89232
REGISTERED PROFESSIONAL ENGINEER
1-9-09

RECORD DRAWING

THIS DRAWING HAS BEEN MODIFIED FROM THE ORIGINAL TO SHOW ONLY THE FIELD CHANGES AND ADJUSTMENTS MADE DURING CONSTRUCTION BY THE CONTRACTOR WHICH WERE DOCUMENTED AND FURNISHED TO THE ENGINEER FOR THE PURPOSE OF PREPARING THESE RECORD DRAWINGS. FIELD INSPECTION OF CONSTRUCTION WAS PERFORMED BY OTHERS. TO THE BEST OF OUR KNOWLEDGE AND UNDERSTANDING THESE RECORD DRAWINGS REPRESENT THE "AS-BUILT" CONDITIONS.

WATER & WASTEWATER PROFILES

ADDISON RESIDENTIAL

TOWN OF ADDISON, TEXAS

Huitt - Zollars, Inc.
3131 Mckinney Ave., Suite 600, Dallas, TX 75204
Phone (214) 871-3311/Fax (214) 871-0757

DESIGN	CHECKED	APPR.	SCALE	DATE	PROJECT NO.	NO.
HZI	HZI	DEM	H: 1"=40' V: 1"=6'	11/20/08		C31

h:\proj\01340801\dgn\3629UTP01.DGN

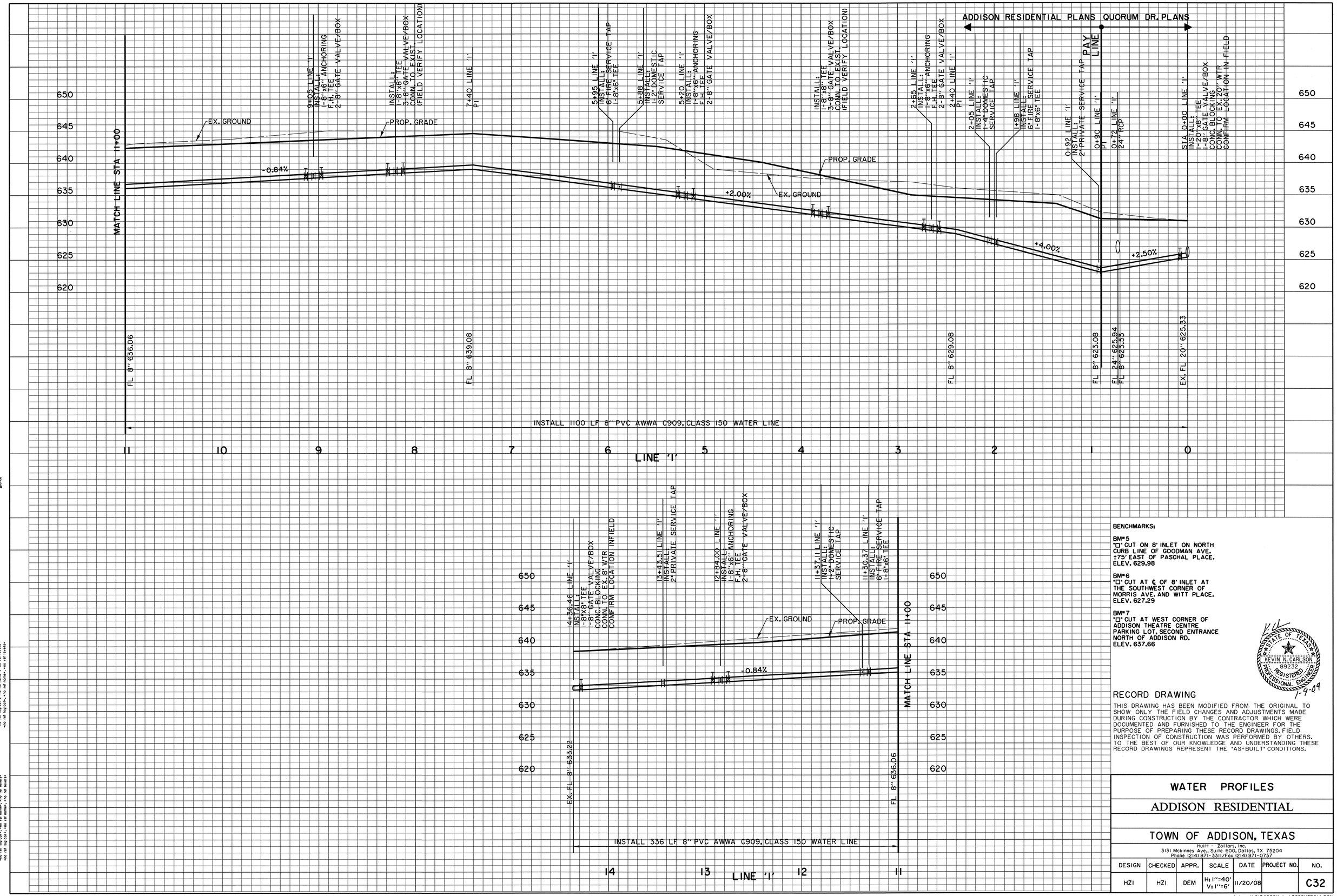

BENCHMARKS:

BM#5
"□" CUT ON 8' INLET ON NORTH CURB LINE OF GOODMAN AVE. ±75' EAST OF PASCHAL PLACE.
ELEV. 629.98

BM#6
"□" CUT AT ℄ OF 8' INLET AT THE SOUTHWEST CORNER OF MORRIS AVE. AND WITT PLACE.
ELEV. 627.29

BM#7
"□" CUT AT WEST CORNER OF ADDISON THEATRE CENTRE PARKING LOT, SECOND ENTRANCE NORTH OF ADDISON RD.
ELEV. 637.66

STATE OF TEXAS
KEVIN N. CARLSON
89232
REGISTERED PROFESSIONAL ENGINEER
1-9-09

RECORD DRAWING

THIS DRAWING HAS BEEN MODIFIED FROM THE ORIGINAL TO SHOW ONLY THE FIELD CHANGES AND ADJUSTMENTS MADE DURING CONSTRUCTION BY THE CONTRACTOR WHICH WERE DOCUMENTED AND FURNISHED TO THE ENGINEER FOR THE PURPOSE OF PREPARING THESE RECORD DRAWINGS. FIELD INSPECTION OF CONSTRUCTION WAS PERFORMED BY OTHERS. TO THE BEST OF OUR KNOWLEDGE AND UNDERSTANDING THESE RECORD DRAWINGS REPRESENT THE "AS-BUILT" CONDITIONS.

WATER PROFILES

ADDISON RESIDENTIAL

TOWN OF ADDISON, TEXAS

Huitt - Zollars, Inc.
3131 Mckinney Ave., Suite 600, Dallas, TX 75204
Phone (214) 871-3311/Fax (214) 871-0757

DESIGN	CHECKED	APPR.	SCALE	DATE	PROJECT NO.	NO.
HZI	HZI	DEM	H: 1"=40' V: 1"=6'	11/20/08		C32

h:\proj\0134080l\dgn\3629UTP01A.DGN

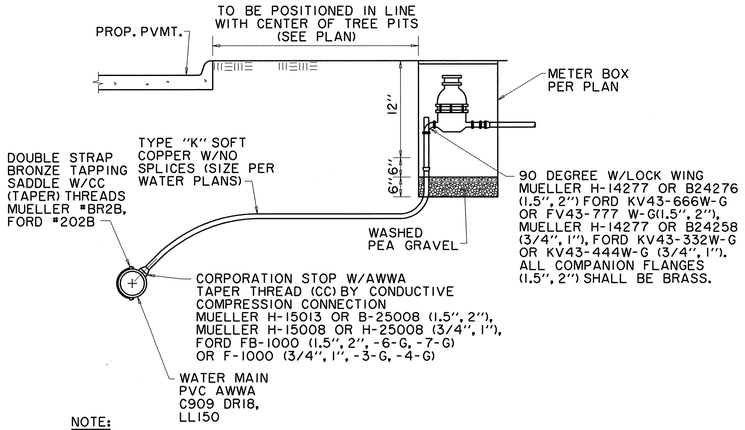

NOTE:

THE TAPPING SADDLE & CORPORATION STOP MUST BE POLY-WRAPPED (8 MIL) & HAND BACKFILLED WITH SAND TO A DEPTH OF 12". CAUTION !! INSPECTION MUST BE CALLED FOR & COMPLETED PRIOR TO BACKFILL OR TAP MUST BE RE-EXPOSED BY THE CONTRACTOR FOR INSPECTION BY THE TOWN.

TYPICAL WATER SERVICE DETAIL UP TO 2" METER

N.T.S.

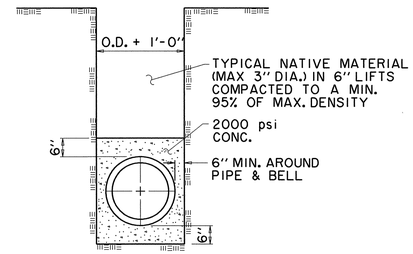

CONC. ENCASEMENT WATER MAIN

N.T.S.

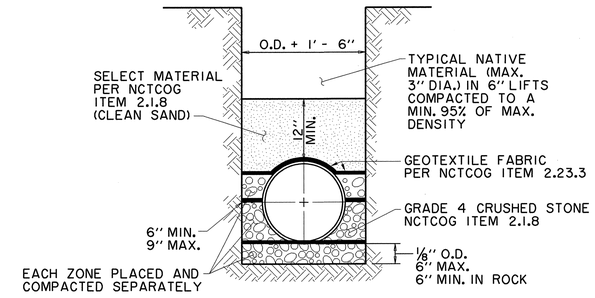

PVC EMBEDMENT

N.T.S.

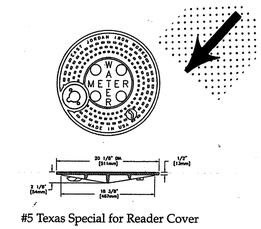

#5 Texas Special for Reader Cover

EJIW

GALVANIZED METER BOX WITH CAST IRON RINGS & COVERS

For 5/8"-3/4" METERS

18" Diameter Meter Can with 12 5/8" Covers & Rings

Available with locking, drop-in or touch reader lids

18" Dia with 12-5/8" Covers & Rings					
Height		Can Weight		Total Weight	
14"	356mm	10 lbs.	5kg	39 lbs.	18kg
18" (MIN.)	457mm	13 lbs.	6kg	42 lbs.	19kg
20"	508mm	14 lbs.	6kg	43 lbs.	20kg
24"	610mm	17 lbs.	8kg	46 lbs.	21kg
30"	762mm	21 lbs.	10kg	50 lbs.	23kg
36"	914mm	27 lbs.	12kg	56 lbs.	25kg
42"	1067mm	31 lbs.	14kg	60 lbs.	27kg
48"	1219mm	35 lbs.	16kg	64 lbs.	29kg
60"	1524mm	43 lbs.	20kg	72 lbs.	33kg
72"	1829mm	51 lbs.	23kg	80 lbs.	36kg

For 1" METERS

24" Diameter Meter Can with 20 1/8" Covers & Rings

Available with locking or touch reader lids

24" Dia with 20-1/8" Covers & Rings					
Height		Can Weight		Total Weight	
14"	356mm	14 lbs.	6kg	95 lbs.	43kg
18" (MIN.)	457mm	17 lbs.	8kg	98 lbs.	44kg
20"	610mm	23 lbs.	10kg	104 lbs.	47kg
30"	762mm	38 lbs.	17kg	109 lbs.	50kg
36"	914mm	38 lbs.	17kg	119 lbs.	54kg
42"	1067mm	43 lbs.	20kg	124 lbs.	56kg
48"	1219mm	48 lbs.	22kg	129 lbs.	59kg
54"	1371mm	67 lbs.	30kg	134 lbs.	61kg
60"	1524mm	72 lbs.	33kg	144 lbs.	65kg

For 1.5-2" METERS

28" Diameter Meter Can with 20 1/8" Covers & Rings

Available with locking or touch reader lids

28" Dia with 20-1/8" Covers & Rings					
Height		Can Weight		Total Weight	
14"	356mm	16 lbs.	7kg	123 lbs.	56kg
18" (MIN.)	457mm	20 lbs.	9kg	127 lbs.	58kg
24"	610mm	26 lbs.	12kg	133 lbs.	60kg
30"	762mm	33 lbs.	15kg	140 lbs.	64kg
36"	914mm	43 lbs.	20kg	150 lbs.	68kg
42"	1067mm	50 lbs.	23kg	157 lbs.	71kg
48"	1219mm	56 lbs.	25kg	163 lbs.	74kg
54"	1371mm	66 lbs.	30kg	173 lbs.	78kg
60"	1524mm	71 lbs.	32kg	178 lbs.	81kg

FIRE HYDRANT TO BE "MUELLER" TRAFFIC MODEL W/6" MECHANICAL JOINT CONNECTION OR APPROVED EQUAL W/5¼" VALVE OPENING W/BARREL APPROX. 7" INSIDE DIAMETER. HYDRANT BODY SHALL BE COATED W/2 COATS OF ALUMINUM PAINT OVER TWO COATS OF PRIMER. BONNET TO FLANGE & NOZZLE CAPS SHALL BE PAINTED BY COLOR CODE FOR MAIN SIZE ACCORDING TO CITY STANDARDS. ALL HYDRANTS SHALL BE EQUIPPED WITH A BREAKAWAY FLANGE & SHALL BE NO CLOSER THAN 3' TO ANY SURFACE OBSTRUCTION. (150 psi WORKING PRESSURE - AWWA STD. C-502-73 OR LATEST REVISION) USE "MUELLER CENTURION"

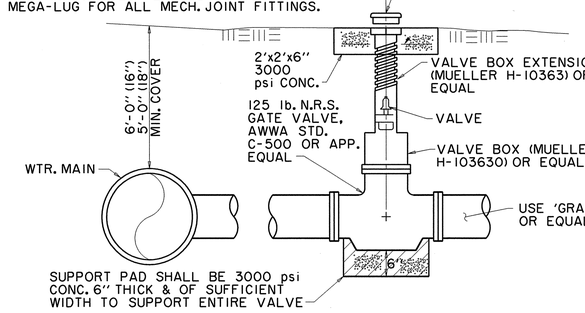

VALVE BOX DETAIL

N.T.S.

(SEE PLANS FOR "MAIN SIZE")

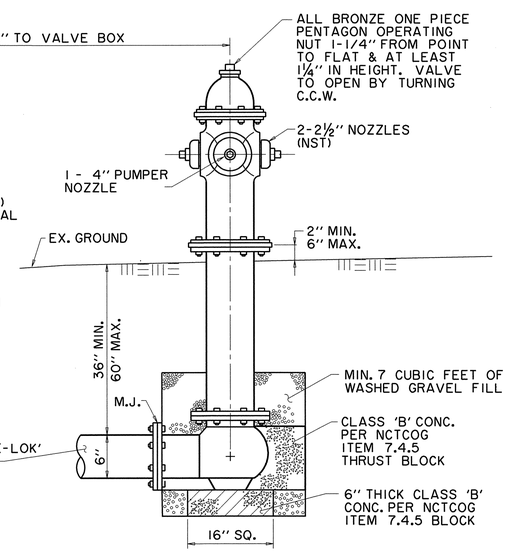

TYPICAL FIRE HYDRANT INSTALLATION

N.T.S.

GENERAL NOTES:

1. ℄ OF F.H. BARREL SHALL BE NOT LESS THAN 6.0' OR MORE THAN 9.0' FROM BACK OF CURB OR EDGE OF DRIVING LANE.
2. DO NOT SET F.H. IN AN EXISTING OR PROPOSED SIDEWALK, UNLESS OTHERWISE NOTED.
3. ALL F.H. TEES SHALL BE FLANGED TEE WITH ANCHORING ON THE BRANCH WITH FLANGED x M.J., M.J. 6" VALVE. RESTRAINING GLANDS EBAA SERIES 2000 OR EQUAL.
4. SET F.H. ON THE LOT LINE EXTENDED WHEN POSSIBLE. (NOT APPLICABLE TO THIS PROJECT)
5. SEE SPECIFICATION FH-95-1 FOR ADDITIONAL REQUIREMENTS.
6. ALL MECHANICAL JOINTS WILL BE RESTRAINT TYPE EBAA SERIES 2000 OR APPROVED EQUAL.

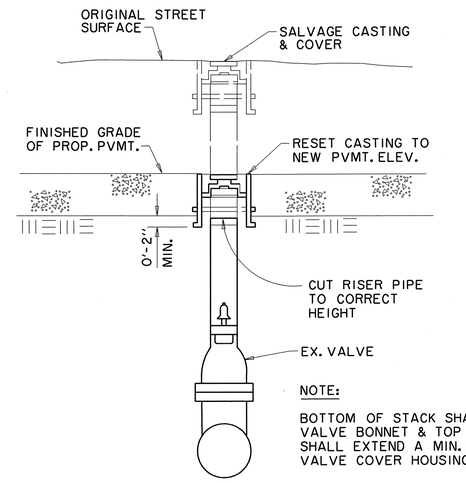

NOTE:

BOTTOM OF STACK SHALL REST ON VALVE BONNET & TOP OF STACK SHALL EXTEND A MIN. OF 2" INTO VALVE COVER HOUSING.

VALVE COVER & RISER PIPE ADJUSTMENT

N.T.S.

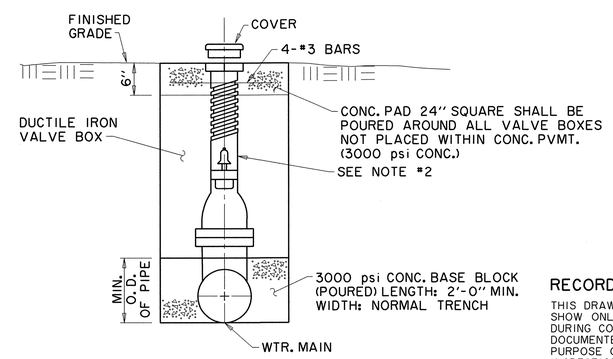

TYPICAL VALVE SETTING & BOX

N.T.S.

GATE VALVES AND VALVE BOXES:

1. GATE VALVES SHALL BE DUCTILE IRON BODY, BRONZE OR BRASS MOUNTED, NON-RISING STEM, RESILIENT WEDGE TYPE (SUCH AS MUELLER A-2360). VALVES SHALL BE OF EQUAL OR GREATER PRESSURE CLASS THAN THE PIPING IN WHICH THEY ARE TO BE INSTALLED.
2. VALVE BOXES SHALL BE U.S.A. CAST IRON AND SHALL BE OF SUFFICIENT LENGTH AND DIAMETER TO OPERATE ALL VALVES BURIED IN THE GROUND. COVERS SHALL BE MARKED ''WATER''. THE BOXES SHALL REST ON THE VALVE AND BE ADJUSTED SO THAT THE COVER MAY SET FLUSH WITH THE FINISHED GRADE.
3. VALVE DEPTH GREATER THAN 4 FEET REQUIRES VALVE EXTENSION STEM.

NOTES:

1. GATE VALVES SHALL BE IN ACCORDANCE WITH AWWA STANDARD C-509-80 OR LATEST THEREOF. ALL VALVES SHALL BE ''MUELLER'' OR APPROVED EQUAL.
2. A PERMANENTLY ATTACHED VALVE EXTENSION STEM SHALL BE REQUIRED FOR ANY VALVE ON WHICH THE OPERATING NUT IS LOCATED IN EXCESS OF 4 FEET BELOW THE TOP OF VALVE BOX. THIS EXTENSION SHALL BE OF SUFFICIENT LENGTH TO INSURE THAT ITS TOP IS WITHIN 4' OF VALVE BOX LID. MANUFACTURED VALVE STACK DUCTILE IRON PIPE TO BE USED FOR EXTENSION GREATER THAN 4'-0''. BELL END OF STACK TO BE FITTED OVER VALVE. VALVE AND VALVE STACK IS TO BE POLY WRAPED.
3. VALVES SHALL BE OF DUCTILE IRON W/RUBBER ENCAPSULATED DISK. BOLTS SHALL BE STAINLESS STEEL OF SAME SIZE ON EACH VALVE.
4. ALL WATER COVERS SHALL BE MARKED ''WATER''.

RECORD DRAWING

THIS DRAWING HAS BEEN MODIFIED FROM THE ORIGINAL TO SHOW ONLY THE FIELD CHANGES AND ADJUSTMENTS MADE DURING CONSTRUCTION BY THE CONTRACTOR WHICH WERE DOCUMENTED AND FURNISHED TO THE ENGINEER FOR THE PURPOSE OF PREPARING THESE RECORD DRAWINGS. FIELD INSPECTION OF CONSTRUCTION WAS PERFORMED BY OTHERS. TO THE BEST OF OUR KNOWLEDGE AND UNDERSTANDING THESE RECORD DRAWINGS REPRESENT THE "AS-BUILT" CONDITIONS.

STATE OF TEXAS
KEVIN N. CARLSON
89232
REGISTERED PROFESSIONAL ENGINEER
1-9-09

WATER DETAILS						
ADDISON RESIDENTIAL						
TOWN OF ADDISON, TEXAS						
Huitt - Zollars, Inc. 3131 Mckinney Ave., Suite 600, Dallas, TX 75204 Phone (214) 871-3311/Fax (214) 871-0757						
DESIGN	CHECKED	APPR.	SCALE	DATE	PROJECT NO.	NO.
HZI	HZI		N.T.S.	11/20/08		C33

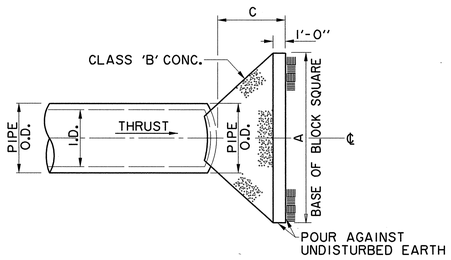

PLAN OF PLUG THRUST BLOCK

N.T.S.

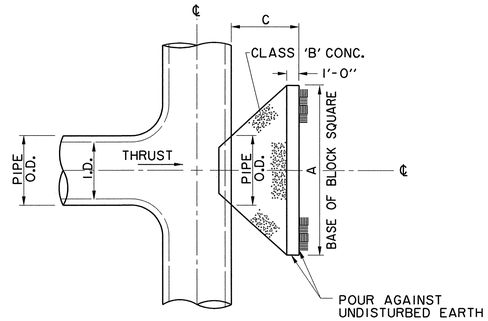

PLAN OF TEE THRUST BLOCK

N.T.S.

			EARTH		ROCK	
I.D. (IN.)	THRUST TONS	C. FT.	A. FT.	VOL. C.Y.	A. FT.	VOL. C.Y.
4, 6, 8	5.1	1.5	2.5	0.3	2.0	0.2
10, 12	11.3	1.5	3.5	0.6	2.5	0.3
16, 18	25.5	2.0	5.5	1.6	4.0	0.9
24	45.2	2.5	7.0	3.1	5.0	1.7

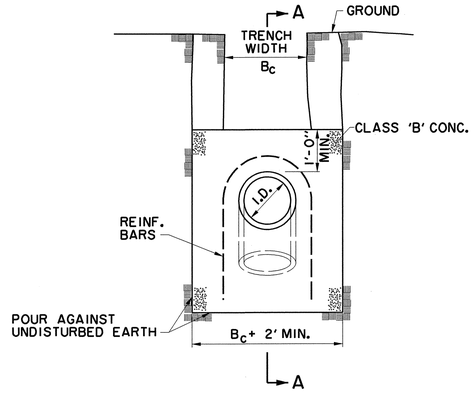

ELEVATION B-B

N.T.S.

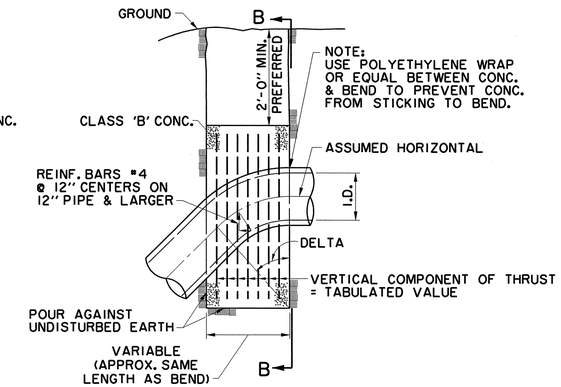

SECTION A-A

N.T.S.

VERTICAL BENDS

	11.25°		22.50°		30°		45°		67.50°		90°		
I.D. (IN.)	THRUST TONS	VOL. C.Y.	THRUST TONS	VOL. C.Y.	THRUST TONS	VOL. C.Y.	THRUST TONS	VOL. C.Y.	THRUST TONS	VOL. C.Y.	THRUST TONS	VOL. C.Y.	I.D. (IN.)
4, 6, 8	1.0	0.5	2.0	1.0	2.5	1.3	3.6	1.8	4.6	2.3	5.0	2.5	4, 6, 8
10, 12	2.2	1.1	4.3	2.2	5.7	2.8	8.0	4.0	10.5	5.2	11.3	5.7	10, 12
16, 18	5.0	2.5	9.7	4.9	12.7	6.4	18.0	9.0	23.5	11.8	25.5	12.7	16, 18
24	8.2	4.4	17.3	8.7	22.6	11.3	32.0	16.0	41.9	20.9	45.2	22.6	24

GENERAL NOTES FOR ALL THRUST BLOCKS

1. ALL CALCULATIONS ARE BASED ON INTERNAL PRESSURE OF 200 P.S.I. FOR 24'' I.D. PIPE AND SMALLER AND 150 P.S.I. ON 30'' I.D. AND LARGER.
2. VOLUMES OF VERTICAL BEND THRUST BLOCKS ARE NET VOLUMES OF CONCRETE TO BE FURNISHED. THE CORRESPONDING WEIGHT OF THE CONCRETE (CLASS F) IS EQUAL TO OR GREATER THAN THE VERTICAL COMPONENT OF THRUST ON THE VERTICAL BEND.
3. WALL THICKNESS (T) ASSUMED HERE FOR ESTIMATING PURPOSES ONLY.
4. CONCRETE FOR BLOCKING SHALL BE CLASS B CONCRETE.
5. DIMENSIONS MAY BE VARIED AS REQUIRED BY FIELD CONDITIONS AND AS DIRECTED BY THE ENGINEER. THE VOLUME OF CONCRETE BLOCKING SHALL NOT BE LESS THAN SHOWN HERE.
6. CONCRETE BLOCKING SHALL BE IN PLACE A MINIMUM OF 4 DAYS PRIOR TO TESTING THE PIPELINE.

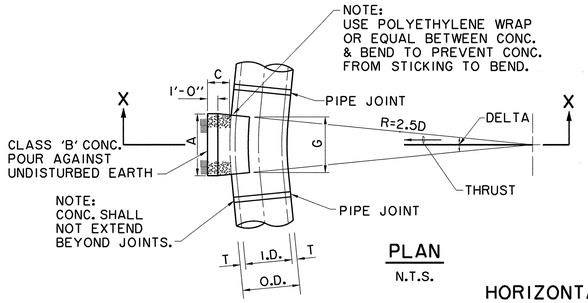

PLAN

N.T.S.

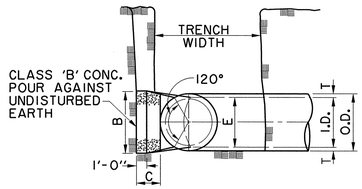

SECTION X-X

N.T.S.

I.D. (IN.)	T. IN.	C 11.25° FT.	C 22.50°+ FT.	E. FT.
4, 6, 8	0.4	1.5	1.5	0.9
10, 12	0.5	1.5	1.5	1.2
16, 18	0.6	1.5	1.5	1.6
24	0.9	1.5	1.5	2.1

HORIZONTAL BENDS

DELTA	11.25°								22.50°								DELTA
			EARTH			ROCK					EARTH			ROCK			
I.D. (IN.)	G. FT.	THRUST TONS	A. FT.	B. FT.	VOL. C.Y.	A. FT.	B. FT.	VOL. C.Y.	G. FT.	THRUST TONS	A. FT.	B. FT.	VOL. C.Y.	A. FT.	B. FT.	VOL. C.Y.	I.D. (IN.)
4, 6, 8	0.4	1.0	1.0	1.5	0.1	1.0	1.0	0.1	0.8	2.0	1.5	1.5	0.1	1.0	1.0	0.1	4, 6, 8
10, 12	0.6	2.2	1.5	1.5	0.1	1.0	1.5	0.1	1.1	4.4	2.0	2.5	0.3	1.5	1.5	0.1	10, 12
16, 18	0.8	5.0	2.0	2.5	0.3	1.5	2.0	0.2	1.6	9.9	3.0	3.5	0.6	2.0	2.5	0.3	16, 18
24	1.1	8.9	3.0	3.5	0.5	1.5	3.0	0.3	2.2	17.7	4.0	4.5	1.0	3.0	3.5	0.5	24
DELTA	45°								90°								DELTA
4, 6, 8	0.4	3.9	2.0	2.0	0.2	1.5	1.5	0.1	0.4	5.0	5.0	1.5	0.4	2.0	2.0	0.2	4, 6, 8
10, 12	0.5	8.7	3.5	2.5	0.5	2.0	2.5	0.3	0.5	6.5	6.5	2.5	1.0	3.5	2.5	0.5	10, 12
16, 18	0.6	19.5	4.5	4.5	1.2	3.0	3.5	0.6	0.6	9.0	9.0	4.0	2.4	4.5	4.0	1.0	16, 18
24	0.9	34.6	8.0	4.5	2.3	4.5	4.0	1.1	0.9	14.5	14.5	4.5	5.0	8.0	4.0	2.1	24

GENERAL NOTES

1. UNPLASTICIZED POLYVINYL CHLORIDE (PVC) WATER PIPE SHALL MEET OR EXCEED REQUIREMENTS OF AWWA C909 PVC PIPE WITH CAST IRON OUTSIDE DIMENSIONS. PIPE SHALL BE LISTED BY UNDERWRITER LABORATORIES AND SHALL BE APPROVED FOR USE IN CITIES AND TOWNS OF THE STATE OF TEXAS BY THE STATE BOARD OF INSURANCE.

2. PVC WATER PIPE SHALL BE FURNISHED WITH A RUBBER RING AT EACH JOINT AND AN INTEGRAL THICKENED BELL AS A PART OF EACH JOINT. THE PIPE CLASS SHALL BE MINIMUM CLASS 150 DR 18 WHICH REFERS TO THE MAXIMUM HYDROSTATIC PRESSURE IN NORMAL OPERATIONS. LAYING LENGTHS SHALL BE 20 FEET+/-. PIPE AND FITTINGS MUST BE ASSEMBLED WITH A NONTOXIC LUBRICANT.

3. FITTINGS FOR PVC WATER PIPE SHALL BE GRAY IRON OR DUCTILE IRON OF THE BELL AND SPIGOT, OR MECHANICAL JOINT TYPE AND SHALL BE CLASS 250 IN ACCORDANCE WITH AWWA C110-77 (ANSI.10).

4. UNLESS OTHERWISE SPECIFIED ON PLANS OR SHOWN IN PROFILES, PVC WATER PIPE SHALL BE INSTALLED TO CLEAR ALL UTILITY LINES AND SHALL HAVE A MINIMUM COVER OF 36 INCHES BELOW THE LOWEST GRADE OF THE STREET AS PER CITY CODE.

5. 4''-12'' R S GATE VALVES SHALL BE IN ACCORDANCE WITH AWWA STANDARD C-500.

6. A PERMANENTLY ATTACHED VALVE EXTENSION STEM SHALL BE REQUIRED FOR ANY VALVE WHOSE OPERATING NUT IS LOCATED IN EXCESS OF 4 FEET BELOW THE TOP OF VALVE BOX. THIS EXTENSION SHALL BE OF SUFFICIENT LENGTH TO INSURE THAT ITS TOP IS WITHIN 4' OF VALVE BOX LID.

7. DUCTILE IRON OR C-900 PVC PIPE SHALL BE USED FOR VALVE STACKS WITH VALVE BOX CASTING.

8. ALL ANCHOR BOLTS SHALL BE GALVANIZED.

9. ALL WATEWR MAINS WILL BE INSTALLED WITH A LOCATION WIRE PER THE TOWN OF ADDISON REQUIREMENTS.

10. POLYWRAP ALL IRON FITTINGS AND VALVES.

RECORD DRAWING

THIS DRAWING HAS BEEN MODIFIED FROM THE ORIGINAL TO SHOW ONLY THE FIELD CHANGES AND ADJUSTMENTS MADE DURING CONSTRUCTION BY THE CONTRACTOR WHICH WERE DOCUMENTED AND FURNISHED TO THE ENGINEER FOR THE PURPOSE OF PREPARING THESE RECORD DRAWINGS. FIELD INSPECTION OF CONSTRUCTION WAS PERFORMED BY OTHERS. TO THE BEST OF OUR KNOWLEDGE AND UNDERSTANDING THESE RECORD DRAWINGS REPRESENT THE "AS-BUILT" CONDITIONS.

STATE OF TEXAS
KEVIN N. CARLSON
89232
REGISTERED PROFESSIONAL ENGINEER
1-9-09

WATER DETAILS

ADDISON RESIDENTIAL

TOWN OF ADDISON, TEXAS

Huitt - Zollars, Inc.
3131 Mckinney Ave., Suite 600, Dallas, TX 75204
Phone (214) 871-3311/Fax (214) 871-0757

DESIGN	CHECKED	APPR.	SCALE	DATE	PROJECT NO.	NO.
HZI	HZI		N.T.S.	11/20/08		C34

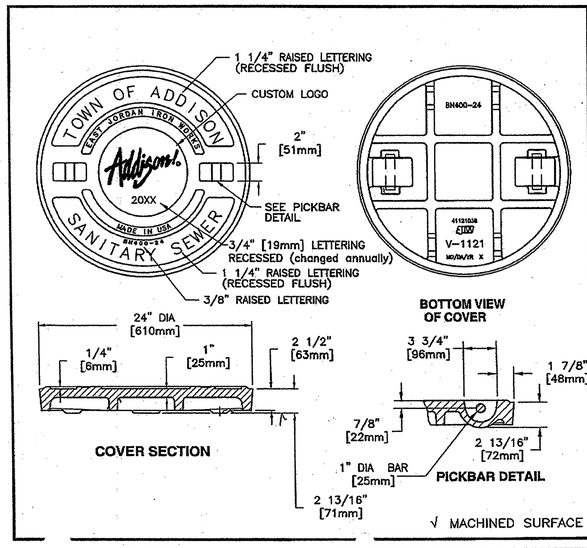

EAST JORDAN IRON WORKS, INC.
P.O. BOX 439
EAST JORDAN, MI. 49727
1-800-874-4100
FAX: 231-536-4458

DRAWN	DATE
SMH	02/09/04
APPROVED	DATE

COVER

PRODUCT NO. **41121038**

CATALOG NO. **V-1121**

REF. PRODUCT DRAWING 41121038

EST. WT. COVER: 188 LBS 85kg

OPEN AREA N/A

MAT'L SPEC. COVER – GRAY IRON ASTM A48 CL35B

LOAD RATING **HEAVY DUTY**

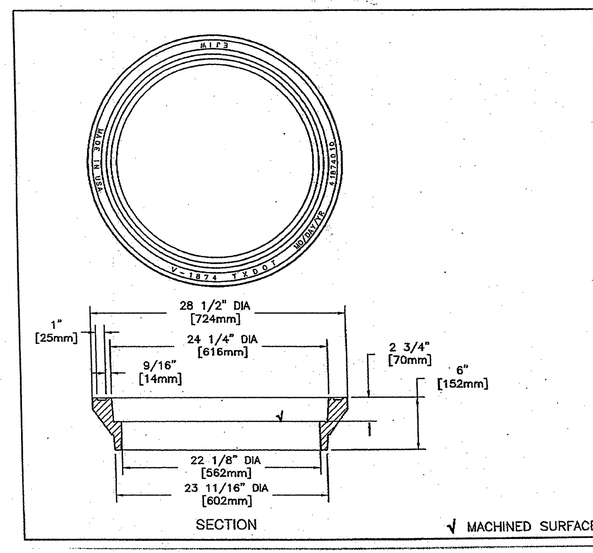

EAST JORDAN IRON WORKS, INC.
P.O. BOX 439
EAST JORDAN, MI. 49727
1-800-874-4100
FAX 231-536-4458

DRAWN	DATE
SBB	08/21/01
APPROVED	DATE

MANHOLE FRAME

PRODUCT NO. **41874010**

CATALOG NO. **V-1874**

REF. PRODUCT DRAWING 41874010

EST. WT. RING: 185 LBS 84kg

OPEN AREA N/A

MAT'L SPEC. RING – GRAY IRON ASTM A48 CL35

LOAD RATING **HEAVY DUTY**

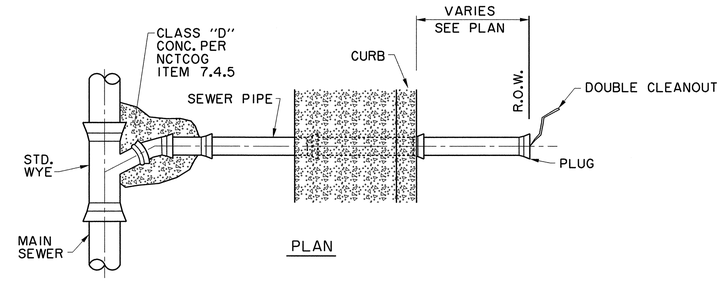

PLAN

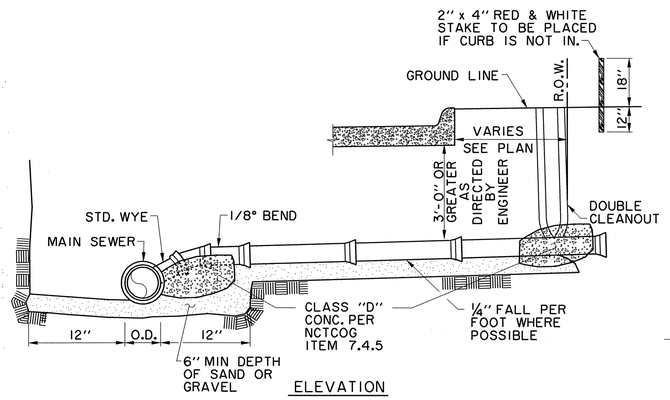

ELEVATION

SANITARY SEWER SERVICE CONNECTION

NTS

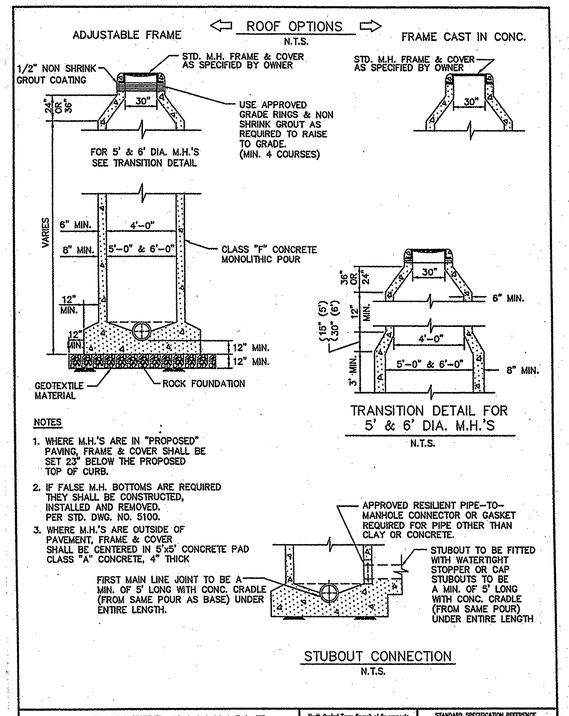

NOTES

1. WHERE M.H.'S ARE IN "PROPOSED" PAVING, FRAME & COVER SHALL BE SET 23" BELOW THE PROPOSED TOP OF CURB.
2. IF FALSE M.H. BOTTOMS ARE REQUIRED THEY SHALL BE CONSTRUCTED, INSTALLED AND REMOVED. PER STD. DWG. NO. 5100.
3. WHERE M.H.'S ARE OUTSIDE OF PAVEMENT, FRAME & COVER SHALL BE CENTERED IN 5'x5' CONCRETE PAD CLASS "A" CONCRETE, 4" THICK

WASTEWATER MANHOLE
CAST-IN-PLACE

North Central Texas Council of Governments

STANDARD SPECIFICATION REFERENCE 502.1
DATE OCT. '04
STANDARD DRAWING NO. 5030

DROP BOWLS

Sanitary Manhole Inside Drop Bowl
U.S.Patent # 6074130, Add. Patents Pending

Manufactured by:
Reliner - Duran Inc.
53 Mt. Archer Rd. Lyme CT 06371
800-504-8008, 860-434-3195(fax)

"A" Drop Bowl with 4" and 6" outlets

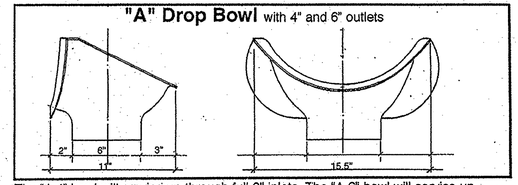

The "A-4" bowl will service up through full 6" inlets. The "A-6" bowl will service up through full 8" inlets. Can be used for 10" and 12" inlet moderate flows. All sizes are for retrofit or new construction--fabricated in marine grade fiberglass and finished in bright white gel coat. Larger sizes and flat wall configerations also available.

"A" Drop Bowl with Optional Force Line Hood attaches with 4 SS bolts

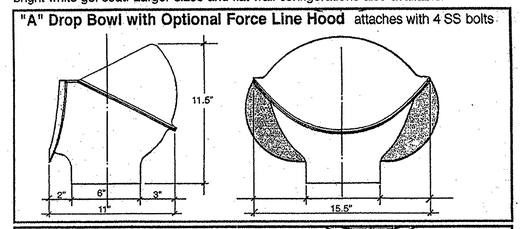

"B" Drop Bowl with 8" and 10" outlets

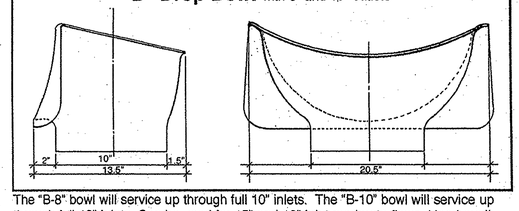

The "B-8" bowl will service up through full 10" inlets. The "B-10" bowl will service up through full 12" inlets. Can be used for 15"-and 16" inlet moderate flows. Hood avail.

INSIDE DROP SYSTEM by RELINER® / Duran Inc.

U.S. Patents # 6074130 and 5553973. Add. Patents Pending

STOP ENTERING YOUR MANHOLES FOR ROUTINE INSPECTION & CLEANING OF INSIDE DROPS

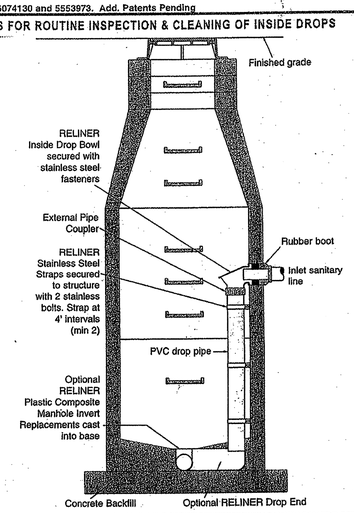

STATE OF TEXAS
KEVIN N. CARLSON
89232
REGISTERED PROFESSIONAL ENGINEER
1-9-09

RECORD DRAWING

THIS DRAWING HAS BEEN MODIFIED FROM THE ORIGINAL TO SHOW ONLY THE FIELD CHANGES AND ADJUSTMENTS MADE DURING CONSTRUCTION BY THE CONTRACTOR WHICH WERE DOCUMENTED AND FURNISHED TO THE ENGINEER FOR THE PURPOSE OF PREPARING THESE RECORD DRAWINGS. FIELD INSPECTION OF CONSTRUCTION WAS PERFORMED BY OTHERS. TO THE BEST OF OUR KNOWLEDGE AND UNDERSTANDING THESE RECORD DRAWINGS REPRESENT THE "AS-BUILT" CONDITIONS.

WASTEWATER DETAILS

ADDISON RESIDENTIAL

TOWN OF ADDISON, TEXAS

Huitt - Zollars, Inc.
3131 Mckinney Ave., Suite 600, Dallas, TX 75204
Phone (214) 871-3311/Fax (214) 871-0757

DESIGN	CHECKED	APPR.	SCALE	DATE	PROJECT NO.	NO.
HZI	HZI		N.T.S.	11/20/08		C35

h:\proj\01340801\dgn\3629WWDETI.DGN

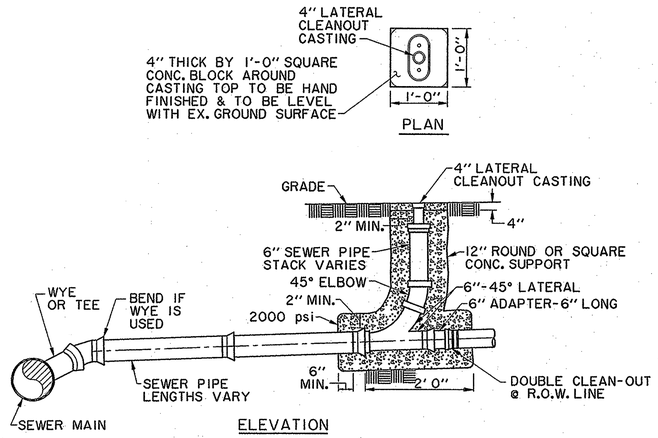

SANITARY SEWER CLEANOUT DETAIL

NTS

PVC SANITARY SEWER PIPE TO BE SDR 35 OR SDR 26 (AS NOTED ON PLANS) WITH INTEGRAL BELL. IT SHALL BE THE RESPONSIBILITY OF THE CONTRACTOR TO FIELD LOCATE HORIZONTALLY EACH SERVICE IN RELATION TO THE SANITARY SEWER STATIONING.

FIELD TIES ARE TO BE INCLUDED & RECORDED ON ALUMINIZED SANITARY SEWER TAPE. THIS TAPE, GREEN OR RED IN COLOR IS TO BE ATTACHED TO THE 6" SERVICE AT THE R.O.W. LINE AND BROUGHT TO THE SURFACE TO BE USED AS A PERMANENT MARKER.

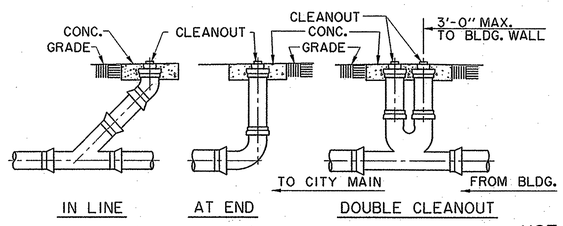

TYPICAL CLEANOUTS

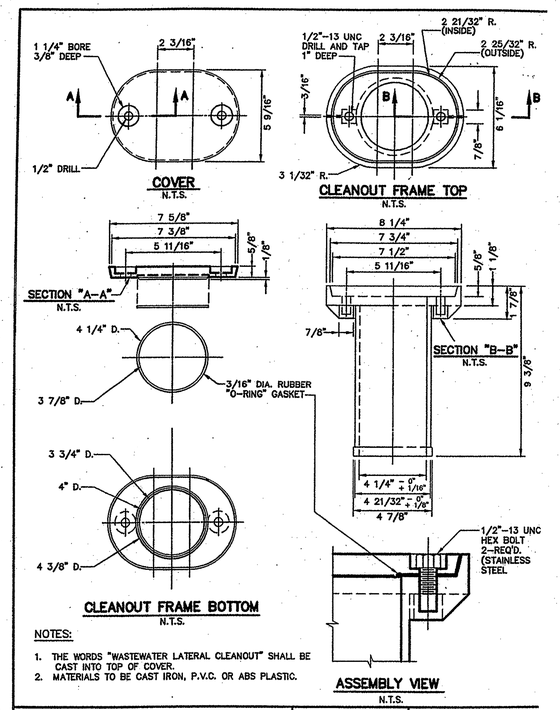

NOTES:

1. THE WORDS "WASTEWATER LATERAL CLEANOUT" SHALL BE CAST INTO TOP OF COVER.
2. MATERIALS TO BE CAST IRON, P.V.C. OR ABS PLASTIC.

WASTEWATER LATERAL CLEANOUT FRAME & COVER	North Central Texas Council of Governments	STANDARD SPECIFICATION REFERENCE 6.7.	DATE NOV. '96	STANDARD DRAWING NO. 5140

EMBEDMENT DETAILS FOR SANITARY SEWER

TABLE OF QUANTITIES OF 2000 psi CONCRETE, GRAVEL OR CRUSHED STONE IN CUBIC YARDS PER 100 LINEAR FEET FOR EACH CLASS EMBEDMENT

TABLE OF QUANTITIES PER 100 LINEAR FEET REINFORCED CONCRETE PIPE

SIZE OF PIPE IN INCHES I.D.	O.D. OF PIPE IN INCHES	TRENCH WIDTH IN INCHES	TRENCH WIDTH IN FEET	CLASS 1 EMBEDMENT CRUSHED STONE	CLASS 2 EMBEDMENT CONCRETE	CLASS 3 EMBEDMENT CONCRETE	CONCRETE ENCASEMENT
12	16.00	32	2.67	4.1	6.5	4.8	15.8
15	19.50	36	3.00	4.8	7.8	6.4	19.2
18	23.00	39	3.25	5.7	9.2	8.2	21.2
21	26.50	43	3.58	6.9	11.0	10.2	24.9
24	30.00	46	3.83	8.3	13.1	12.4	28.7
27	33.50	51	4.25	10.3	16.1	14.4	32.8
30	37.00	57	4.75	12.7	20.1	17.0	34.8
33	40.50	62	5.17	15.1	23.8	19.3	39.2
36	44.00	67	5.58	18.0	28.6	22.1	43.8

TABLE OF QUANTITIES PER 100 LINEAR FEET-PVC PIPE (IN CUBIC YARDS)

SIZE OF PIPE IN INCHES I.D.	O.D. OF PIPE IN INCHES	TRENCH WIDTH IN INCHES	TRENCH WIDTH IN FEET	CLASS 4 EMBEDMENT CRUSHED STONE	CONCRETE ENCASEMENT
6	6.28	24	2.00	8.0	11.7
8	8.16	24	2.00	8.7	12.4
10	10.20	26	2.18	10.2	14.2
12	12.24	28	2.35	11.7	15.9
16	15.30	31	2.61	14.0	18.8
24		36	3.0		
30		42	3.5		

USE CLASS 2 EMBEDMENT UNLESS OTHERWISE NOTED

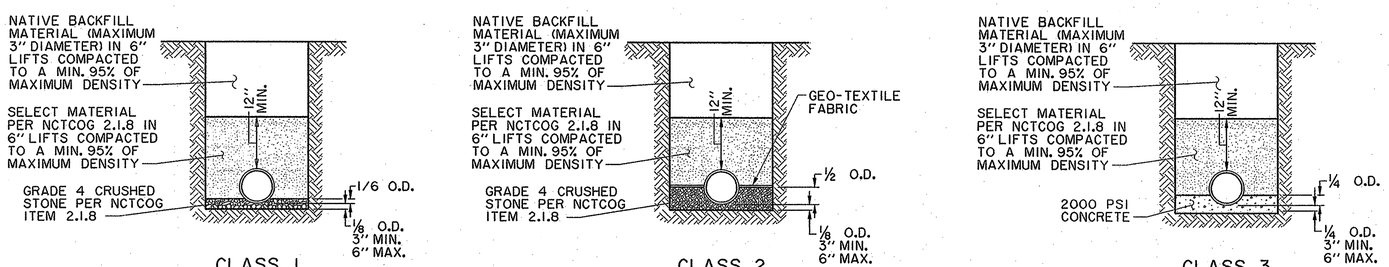

CLASS 1 EMBEDMENT
LOAD FACTOR = 1.5
N.T.S.

CLASS 2 EMBEDMENT
LOAD FACTOR = 1.9
N.T.S.

CLASS 3 EMBEDMENT
LOAD FACTOR = 2.8
N.T.S.

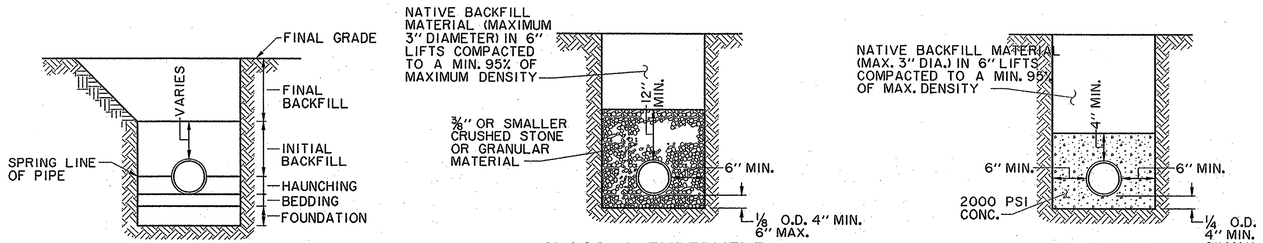

EMBEDMENT ZONES
NTS

CLASS 4 EMBEDMENT
(SDR35 AND SDR26 P.V.C. PIPE ONLY)
LOAD FACTOR = 2.0
NTS

CONCRETE ENCASEMENT
LOAD FACTOR = 4.2
N.T.S.

TYPICAL NATIVE MATERIAL COMPACTED TO:
95% OF STANDARD PROCTOR DENSITY @ OPTIMUM MOISTURE 0 TO +3% UNDER PVMT.
95% OF STANDARD PROCTOR DENSITY @ OPTIMUM MOISTURE 0 TO +3% OUTSIDE CURB LINES JETTING IS NOT ALLOWED BACKFILL TO BE COMPACTED IN 6"+/- LIFTS
TYPICAL NATIVE MATERIAL (MAX. 3" DIA.)

RECORD DRAWING

THIS DRAWING HAS BEEN MODIFIED FROM THE ORIGINAL TO SHOW ONLY THE FIELD CHANGES AND ADJUSTMENTS MADE DURING CONSTRUCTION BY THE CONTRACTOR WHICH WERE DOCUMENTED AND FURNISHED TO THE ENGINEER FOR THE PURPOSE OF PREPARING THESE RECORD DRAWINGS. FIELD INSPECTION OF CONSTRUCTION WAS PERFORMED BY OTHERS. TO THE BEST OF OUR KNOWLEDGE AND UNDERSTANDING THESE RECORD DRAWINGS REPRESENT THE "AS-BUILT" CONDITIONS.

STATE OF TEXAS
KEVIN N. CARLSON
89232
REGISTERED PROFESSIONAL ENGINEER
1-9-09

WASTEWATER DETAILS

ADDISON RESIDENTIAL

TOWN OF ADDISON, TEXAS

Huitt - Zollars, Inc.
3131 Mckinney Ave., Suite 600, Dallas, TX 75204
Phone (214) 871-3311/Fax (214) 871-0757

DESIGN	CHECKED	APPR.	SCALE	DATE	PROJECT NO.	NO.
HZI	HZI		N.T.S.	11/20/08		C36

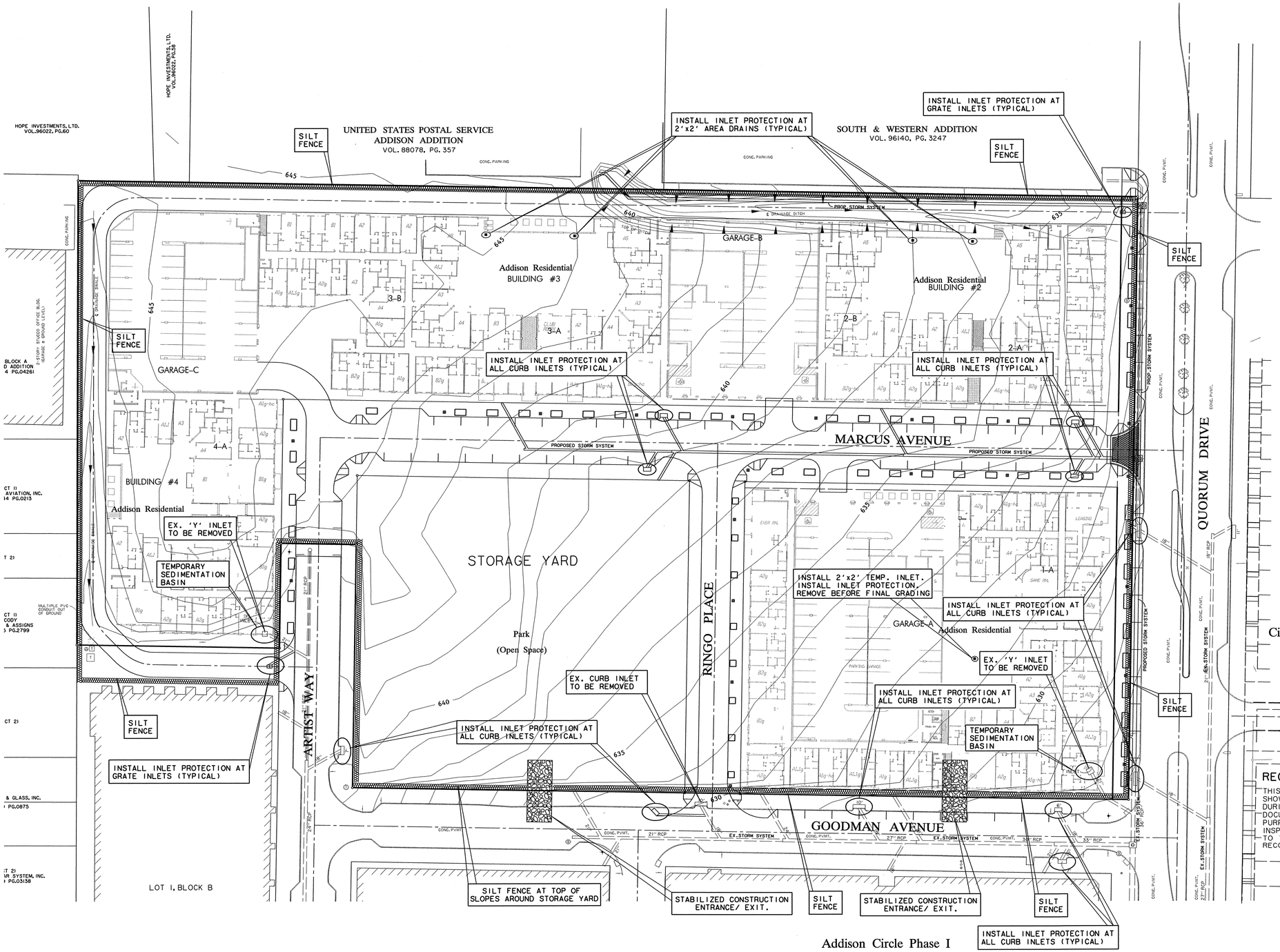

Addison Circle Phase I

N

0 20 40 60 80
SCALE IN FEET
SCALE: 1" = 40'

NOTES:

1. SEE DRAINAGE AREA MAP FOR DRAINAGE AREAS AND CALCULATIONS.

2. SEE EROSION CONTROL DETAILS FOR TYPES OF INLET PROTECTION.

3. STOCKPILED SOIL WILL BE STORED IN THE CONSTRUCTION STAGING AREA.

AREA OF DISTURBANCE = 9.24 ACRES

BENCHMARKS:

BM#5
"D" CUT ON 8' INLET ON NORTH CURB LINE OF GOODMAN AVE. ±75' EAST OF PASCHAL PLACE. ELEV. 629.98

BM#6
"D" CUT AT ℄ OF 8' INLET AT THE SOUTHWEST CORNER OF MORRIS AVE. AND WITT PLACE. ELEV. 627.29

BM#7
"D" CUT AT WEST CORNER OF ADDISON THEATRE CENTRE PARKING LOT. SECOND ENTRANCE NORTH OF ADDISON RD. ELEV. 637.66

RECORD DRAWING

THIS DRAWING HAS BEEN MODIFIED FROM THE ORIGINAL TO SHOW ONLY THE FIELD CHANGES AND ADJUSTMENTS MADE DURING CONSTRUCTION BY THE CONTRACTOR WHICH WERE DOCUMENTED AND FURNISHED TO THE ENGINEER FOR THE PURPOSE OF PREPARING THESE RECORD DRAWINGS. FIELD INSPECTION OF CONSTRUCTION WAS PERFORMED BY OTHERS. TO THE BEST OF OUR KNOWLEDGE AND UNDERSTANDING THESE RECORD DRAWINGS REPRESENT THE "AS-BUILT" CONDITIONS.

STATE OF TEXAS
KEVIN N. CARLSON
89232
REGISTERED PROFESSIONAL ENGINEER
1-9-09

POLLUTION CONTROL PLAN

ADDISON RESIDENTIAL

TOWN OF ADDISON, TEXAS

Huitt - Zollars, Inc.
3131 Mckinney Ave., Suite 600, Dallas, TX 75204
Phone (214) 871-3311/Fax (214) 871-0757

DESIGN	CHECKED	APPR.	SCALE	DATE	PROJECT NO.	NO.
HZI	HZI	DEM	1"=40'	11/20/08		C37

h:\proj\01340801\dgn\3629ECO1.DGN

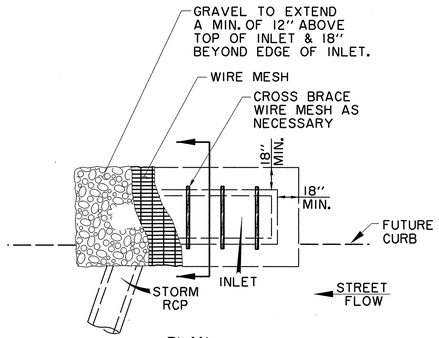

PLAN

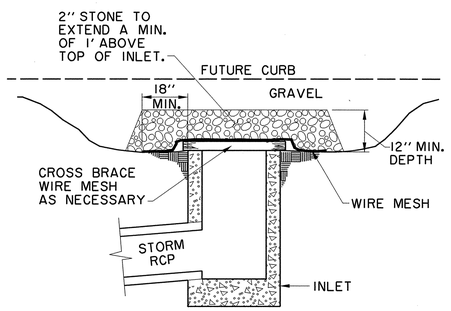

CROSS-SECTION

INLET PROTECTION WIRE MESH & GRAVEL

NCTCOG 02270.G
STORM WATER QUALITY
BEST MANAGEMENT PRACTICES
FOR CONSTRUCTION ACTIVITIES

DETAIL 'E'

N.T.S.

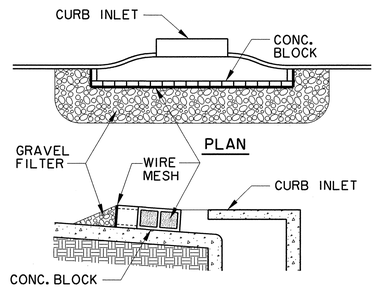

PLAN

CROSS-SECTION

INLET PROTECTION BLOCK & GRAVEL

NCTCOG 02270.G
STORM WATER QUALITY
BEST MANAGEMENT PRACTICES
FOR CONSTRUCTION ACTIVITIES

DETAIL 'G'

N.T.S.

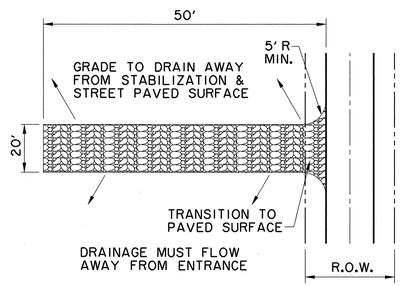

PLAN

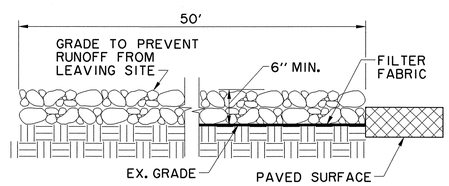

PROFILE

STABILIZED CONSTRUCTION ENTRANCE / EXIT

NCTCOG 02270.G
STORM WATER QUALITY
BEST MANAGEMENT PRACTICES
FOR CONSTRUCTION ACTIVITIES

DETAIL 'A'

N.T.S.

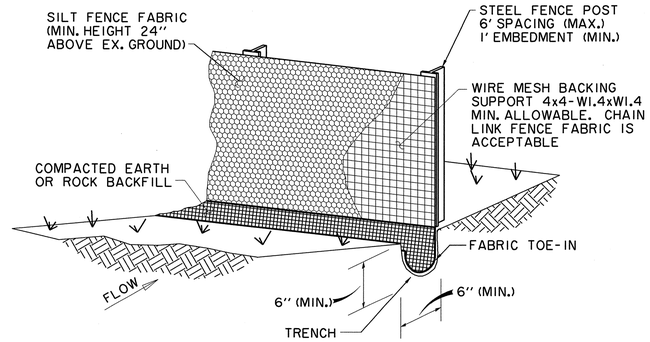

SILT FENCE SHOULD BE SECURELY FASTENED TO BACKING SUPPORT AND POSTS.

SILT FENCE

NCTCOG 02270.B
STORM WATER QUALITY
BEST MANAGEMENT PRACTICES
FOR CONSTRUCTION ACTIVITIES

DETAIL 'B'

N.T.S.

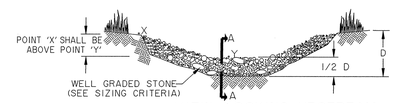

VIEW LOOKING UPSTREAM

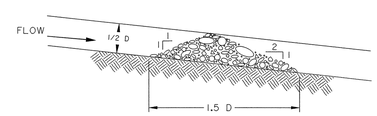

SECTION A - A

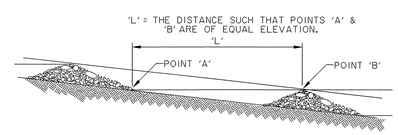

SPACING BETWEEN CHECK DAMS

ROCK CHECK DAM

N.T.S.

NOTES:

1. A NOTICE OF INTENT (N.O.I.) WILL BE PREPARED BY THE CONTRACTOR FOR THIS PROJECT IN ACCORDANCE WITH THE REQUIREMENTS OF THE N.P.D.E.S. GENERAL PERMIT FOR STORM WATER DISCHARGES ASSOCIATED WITH CONSTRUCTION.
2. ALL CONTRACTORS WILL COMPLY WITH THE REQUIREMENTS AND INTENT OF THE N.P.D.E.S. GENERAL PERMIT FOR STORM WATER DISCHARGES.
3. EACH CONTRACTOR SHALL SUBMIT A NOTICE OF INTENT (N.O.I.) FOR STORM WATER DISCHARGE PERMIT COVERAGE. THIS SUBMITTAL SHALL BE COORDINATED WITH THE TOWN AND SHALL OCCUR NO LESS THAN 48 HOURS PRIOR TO THE COMMENCEMENT OF ANY CONSTRUCTION ACTIVITY.
4. EACH CONTRACTOR SHALL OBTAIN AND SUBMIT TO TOWN A POLLUTION PREVENTION CERTIFICATION FROM EACH SUBCONTRACTOR WHOSE WORK IMPACTS THE STORM WATER POLLUTION PREVENTION PLAN (S.W.P.P.P.) PRIOR TO THE PERFORMANCE OF ANY WORK BY SAID SUBCONTRACTOR. THESE CERTIFICATIONS SHALL BECOME A PART OF THE STORM WATER POLLUTION PREVENTION PLAN.
5. CONTRACTOR SHALL INSTALL EROSION CONTROL MEASURES, AS INDICATED ON THE PLANS AND AS FIELD CONDITIONS WARRANT, PRIOR TO COMMENCING ANY CONSTRUCTION ACTIVITY. REPAIRS OR MODIFICATIONS TO THE MEASURES WILL BE MADE BY THE CONTRACTOR IF THE CONTROL MEASURES PROVE INEFFECTIVE OR IF ADDITIONAL CONTROL MEASURES ARE NECESSARY.
6. CONTRACTOR SHALL TAKE APPROPRIATE MEASURES TO PREVENT TRACKING OF MUD AND/OR SOILS ONTO EXISTING AND/OR NEW PAVEMENT. ANY TRACKING THAT OCCURS SHALL BE REMOVED IMMEDIATELY BY THE CONTRACTOR.
7. CONTRACTOR SHALL CONSTRUCT INLET PROTECTION FOR ALL INCOMPLETE CURB INLETS AND SHALL TAKE EVERY MEASURE TO KEEP SOILS AND SEDIMENTS FROM ENTERING THE STORM SEWER SYSTEM.
8. CONTRACTOR SHALL CONSTRUCT DROP INLET PROTECTION FOR ALL INCOMPLETE DROP INLETS AND SHALL TAKE EVERY MEASURE TO KEEP SOILS AND SEDIMENTS FROM ENTERINGTHE STORM SEWER SYSTEM.
9. AT A MINIMUM, PERIMETER CONTROLS SUCH AS SILT FENCE OR STRAW BALES SHALL BE INSTALLED AT ALL DOWN SLOPE BOUNDARIES AND AS WARRANTED WHERE PAVEMENT REMOVAL, UTILITY CONSTRUCTION, GRADING, OR OTHER CONSTRUCTION ACTIVITIES ARE TO BE PERFORMED. THE CONTRACTOR SHALL AT ALL TIMES TAKE SUCH MEASURES AS NECESSARY TO MINIMIZE OFFSITE TRACKING OR TRANSPORT OF SEDIMENT AND DEBRIS.
10. DAMAGE TO ADJACENT PROPERTY AND/OR TO RECEIVING WATERS CAUSED BY IMPROPERLY INSTALLED OR POORLY MAINTAINED EROSION CONTROL MEASURES WILL BE THE RESPONSIBILITY OF THE CONTRACTOR.
11. THE CONTRACTOR SHALL BE RESPONSIBLE FOR THE REMOVAL AND DISPOSAL OF ANY SILTATION CAUSED BY HIS OPERATIONS AND/OR FAILURE OF THE EROSION CONTROL MEASURES.
12. CONTRACTOR SHALL REMOVE AND PROPERLY DISPOSE OF ACCUMULATED SILT AND SEDIMENT FROM EROSION CONTROL MEASURES WHEN IT REACHES A DEPTH OF SIX (6) INCHES OR IMPAIRS THE EFFECTIVENESS OF THE MEASURES.
13. THE TOWN'S REPRESENTATIVE MAY INSPECT THE PROJECT EVERY SEVEN DAYS, AT A MINIMUM, AND AFTER EVERY RAINFALL OF ONE-HALF INCHES OR GREATER TO DETERMINE THE INTEGRITY AND EFFECTIVENESS OF THE EROSION CONTROL MEASURES. A WRITTEN INSPECTION REPORT MAY BE FILED WITH THE POLLUTION PREVENTION PLAN. THIS INSPECTION DOES NOT RELIEVE THE CONTRACTOR'S RESPONSIBILITY FOR INSPECTION AND MAINTENANCE OF THE EROSION CONTROL MEASURES OR HIS DUTY TO COMPLY WITH THE INTENT AND CONDITIONS OF THE N.P.D.E.S. GENERAL PERMIT.
14. ALL STOCKPILED SOILS WILL BE SURROUNDED BY A STRAW BALE DIKE, SILT FENCE, SEDIMENT CONTROL SWALE, OR EQUIVALENT MEASURE TO PROPERLY CONTROL SEDIMENT RUNOFF, AS APPROVED BY THE TOWN.
15. CONTRACTOR SHALL STABILIZE ANY AREA WHERE CONSTRUCTION ACTIVITY IS TO BE TEMPORARILY OR PERMANENTLY CEASED FOR MORE THAN 14 DAYS.
16. THE CONTRACTOR SHALL BE RESPONSIBLE FOR THE MINIMIZATION OF DUST PER NCTCOG BEST MANAGEMENT PRACTICES AND NPEDS..

RECORD DRAWING

THIS DRAWING HAS BEEN MODIFIED FROM THE ORIGINAL TO SHOW ONLY THE FIELD CHANGES AND ADJUSTMENTS MADE DURING CONSTRUCTION BY THE CONTRACTOR WHICH WERE DOCUMENTED AND FURNISHED TO THE ENGINEER FOR THE PURPOSE OF PREPARING THESE RECORD DRAWINGS. FIELD INSPECTION OF CONSTRUCTION WAS PERFORMED BY OTHERS. TO THE BEST OF OUR KNOWLEDGE AND UNDERSTANDING THESE RECORD DRAWINGS REPRESENT THE "AS-BUILT" CONDITIONS.

STATE OF TEXAS
KEVIN N. CARLSON
89232
REGISTERED PROFESSIONAL ENGINEER
1-9-09

POLLUTION CONTROL DETAILS						
ADDISON RESIDENTIAL						
TOWN OF ADDISON, TEXAS						
Huitt - Zollars, Inc. 3131 Mckinney Ave., Suite 600, Dallas, TX 75204 Phone (214) 871-3311/Fax (214) 871-0757						
DESIGN	CHECKED	APPR.	SCALE	DATE	PROJECT NO.	NO.
HZI	HZI		N.T.S.	11/20/08		C38

h:\proj\01340801\dgn\3629ECDETI.DGN

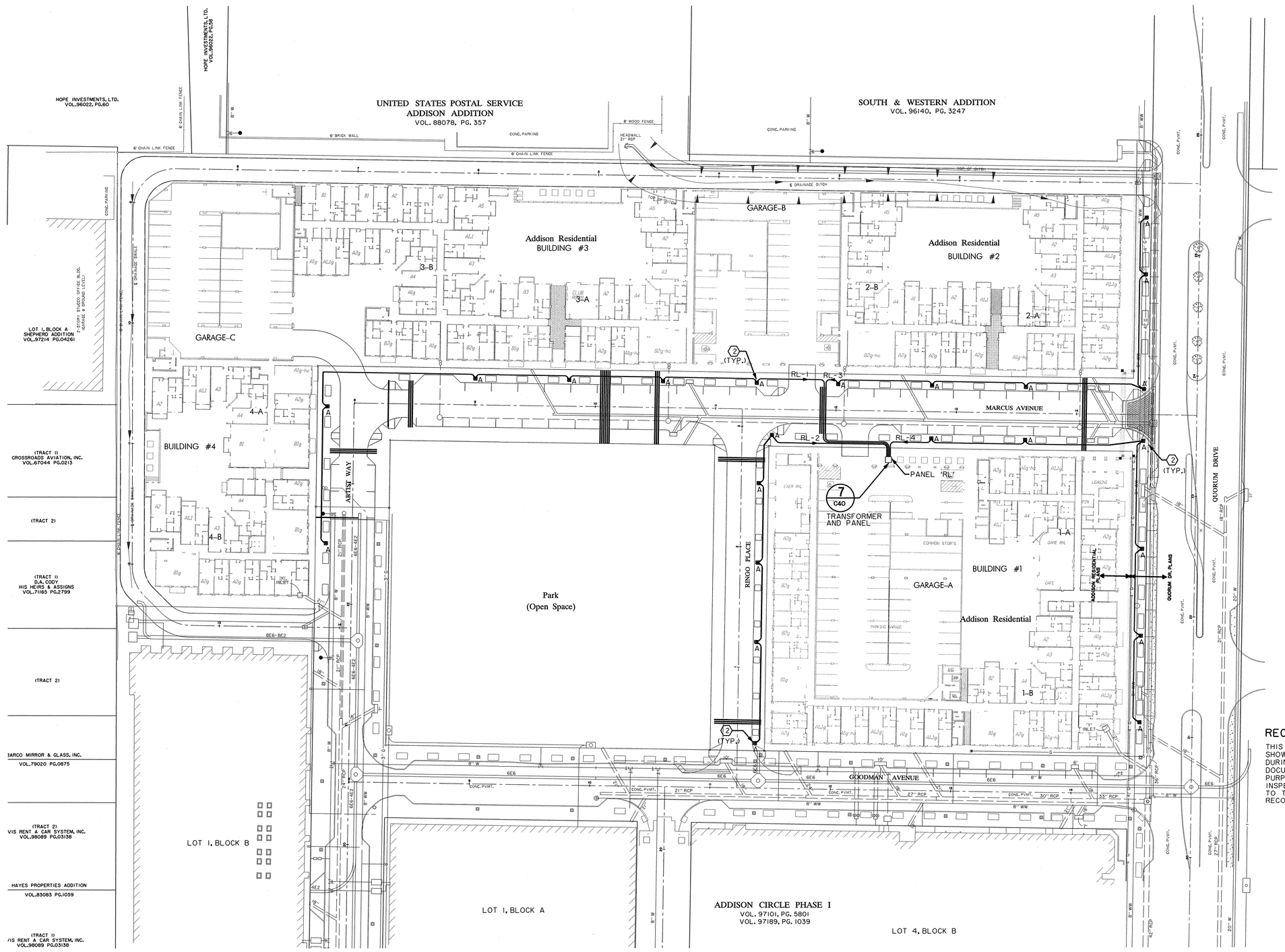

N

0 20 40 60 80
SCALE IN FEET
SCALE: 1" = 40'

GENERAL NOTES

NUMBER	DESCRIPTION
1	REFER TO SHEET C40.00 FOR KEY NOTES AND LEGEND.
2	THE TERM 'PROVIDE' SHALL MEAN FOR THE CONTRACTOR TO FURNISH AND INSTALL A COMPLETE OPERATING SYSTEM.
3	LOCATIONS OF ALL LIGHT FIXTURES, HANDHOLES AND ROUTING OF CONDUITS SHALL BE IDENTIFIED ON THE SITE BY STAKES AND PAINT PRIOR TO ANY EXCAVATION. REQUIREMENTS FOR CONDUIT ROUTING ARE PROVIDED ON DRAWINGS AND SPECIFICATIONS. OWNER WILL REVIEW AT THE SITE AND PROVIDE DIRECTIONS ON FIELD ADJUSTMENTS UP TO 10 FOOT FROM LOCATIONS SHOWN ON THE DRAWINGS.
4	CONTRACTOR SHALL COORDINATE ELECTRICAL CONDUIT TRENCHING WITH OTHER UTILITY INSTALLATIONS.
5	BID SHALL BE BASED UPON THE LIGHT FIXTURE AND POLE SCHEDULED.

RECORD DRAWING

THIS DRAWING HAS BEEN MODIFIED FROM THE ORIGINAL TO SHOW ONLY THE FIELD CHANGES AND ADJUSTMENTS MADE DURING CONSTRUCTION BY THE CONTRACTOR WHICH WERE DOCUMENTED AND FURNISHED TO THE ENGINEER FOR THE PURPOSE OF PREPARING THESE RECORD DRAWINGS. FIELD INSPECTION OF CONSTRUCTION WAS PERFORMED BY OTHERS. TO THE BEST OF OUR KNOWLEDGE AND UNDERSTANDING THESE RECORD DRAWINGS REPRESENT THE "AS-BUILT" CONDITIONS.

STATE OF TEXAS
KEVIN N. CARLSON
89235
REGISTERED PROFESSIONAL ENGINEER
7-9-09

ELECTRICAL PLAN

ADDISON RESIDENTIAL

TOWN OF ADDISON, TEXAS

Huitt - Zollars, Inc.
3131 Mckinney Ave., Suite 600, Dallas, TX 75204
Phone (214) 871-3311/Fax (214) 871-0757

DESIGN	CHECKED	APPR.	SCALE	DATE	PROJECT NO.	NO.
HZI	HZI	DEM	1"=40'	11/20/08		C39

h:\proj\0134080\dgn\3629ES01.DGN

LIGHT FIXTURE SCHEDULE					
TYPE	DESCRIPTION	LAMP	MANUFACTURER	CATALOG NO.	FINISH •
A	CUSTOM STYLE	175 MH	BEGA	9801MH/WC175MH/120	BLACK
A-POLE	15'-8" ROUND		BEGA	1508HR	BLACK
PROVIDE MATCHING BASE COVER. DOUBLE FUSE EACH FIXTURE.					

ELECTRICAL LEGEND

SYMBOL	DESCRIPTION
———	2" CONDUIT FOR STREET LIGHTING CIRCUITS FROM PANELBOARD TO PULLBOXES AND STREET LIGHT FIXTURES.
RL-1,3	CIRCUIT NUMBERS FROM PANEL "RL".
●	PEDESTRIAN POLE LIGHT FIXTURE TYPE 'A'.

KEY NOTES

NUMBER	DESCRIPTION
1	PROVIDE 120/240 VOLT, 1 PHASE, 3 WIRE, W/GND PANELBOARD. MOUNT ON UNISTRUT RACK NEAR TRANSFORMER.
2	PEDESTRIAN POLE LIGHT FIXTURE TYPE 'A'. INSTALL CONCRETE BASE, ANCHOR BOLTS, GROUND ROD, POLE, FIXTURE AND CONNECTIONS. REFER TO SHEET C19 FOR DETAILS.

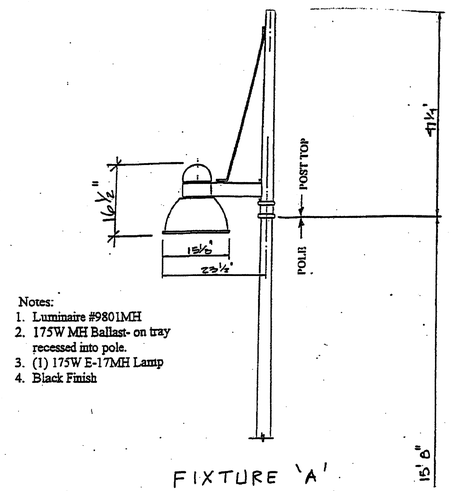

Notes:
1. Luminaire #9801MH
2. 175W MH Ballast- on tray recessed into pole.
3. (1) 175W E-17MH Lamp
4. Black Finish

3 C40 POST TOP DETAIL
N.T.S.

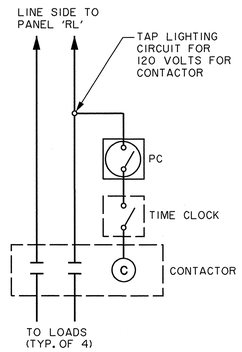

2 C40 CONTACTOR POWER RISER DIAGRAM
N.T.S.

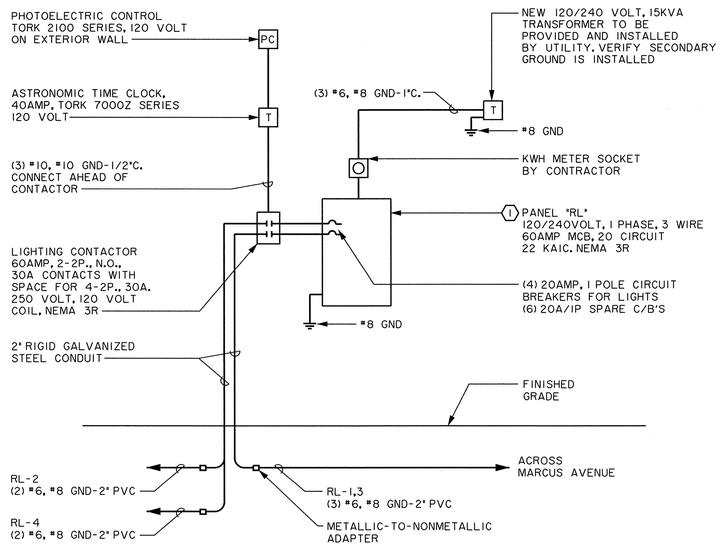

1 C40 POWER RISER DIAGRAM
N.T.S.

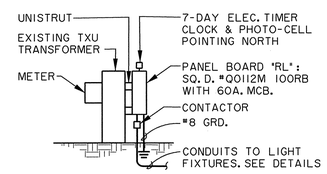

7 C40 EQUIPMENT INSTALLATION DETAIL
TRANSFORMER AND PANEL

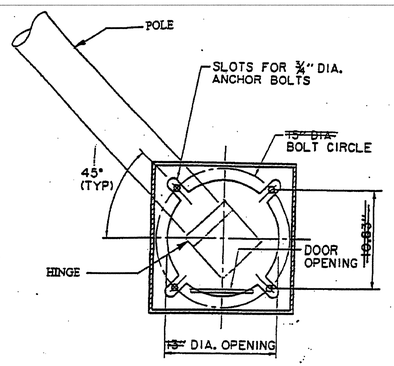

4 C40 POLE ANCHOR DETAIL
N.T.S.

NOTES:

1. BOLT PATTERN IS TO MATCH THE SPECIFIED POLE BASE.

2. IN LIEU OF DOOR OPENING SHOWN, A HINGED POLE IS REQUIRED. THE POLE IS TO HINGE 45° FROM MAIN AXIS. PROVIDE SPLIT ROUND COVER OVER THE CUSTOM BASE PLATE WITH FINISH TO MATCH POLE.

3. ALL POLE BASE DETAILS MUST BE CONFIRMED IN WRITING WITH THE OWNER PRIOR TO FABRICATION. AN ALTERNATE BOLT PATTERN MAY BE USED FOR SOME POLES AT OPTION OF OWNER.

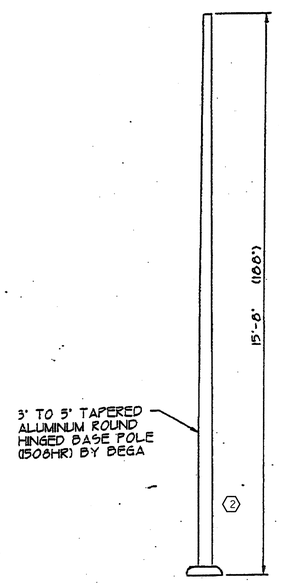

5 C40 POLE DETAIL
N.T.S.

PANEL RL

240/120 VOLT, 1 PHASE, 3 WIRE	60 AMP MCB	NEMA 3R ENCLOSURE
10 KAIC SYMMETRICAL		PADLOCKABLE

LOAD SERVED	PHASE LOAD	CKT	BKR P	BKR AMP	PHASE A B	CKT	BKR AMP	BKR P	CKT	PHASE LOAD	LOAD SERVED
EXTERIOR LIGHTING BLDG 3 & 4	1,260	1	1	20		20	1	2		1,050	EXTERIOR LIGHTING BLDG 1
EXTERIOR LIGHTING BLDG 2	1,260	3	1	20		20	1	4		1,260	EXTERIOR LIGHTING BLDG 1
SPARE		5	1	20		20	1	6			SPARE
SPARE		7	1	20		20	1	8			SPARE
SPARE		9	1	20		20	1	10			SPARE
		11	1	20		20	1	12			
		13	1	20		20	1	14			
		15	1	20		20	1	16			
		17	1	20		20	1	18			
		19	1	20		20	1	20			
		21	1	20		20	1	22			
		23	1	20		20	1	24			
		25	1	20		20	1	26			
		27	1	20		20	1	28			
		29	1	20		20	1	30			
		31	1	20		20	1	32			
		33	1	20		20	1	34			
		35	1	20		20	1	36			
		37	1	20		20	1	38			
		39	1	20		20	1	40			
		41	1	20		20	1	42			

PHASE A CONNECTED KW 2
PHASE B CONNECTED KW 3
TOTAL CONNECTED KW 5
ESTIMATED DEMAND KW 5
ESTIMATED DEMAND AMPS 23

6 C40 PANELBOARD RL
N.T.S.

RECORD DRAWING

THIS DRAWING HAS BEEN MODIFIED FROM THE ORIGINAL TO SHOW ONLY THE FIELD CHANGES AND ADJUSTMENTS MADE DURING CONSTRUCTION BY THE CONTRACTOR WHICH WERE DOCUMENTED AND FURNISHED TO THE ENGINEER FOR THE PURPOSE OF PREPARING THESE RECORD DRAWINGS. FIELD INSPECTION OF CONSTRUCTION WAS PERFORMED BY OTHERS. TO THE BEST OF OUR KNOWLEDGE AND UNDERSTANDING THESE RECORD DRAWINGS REPRESENT THE "AS-BUILT" CONDITIONS.

STATE OF TEXAS
KEVIN N. CARLSON
89232
REGISTERED PROFESSIONAL ENGINEER

ELECTRICAL SYM'S., NOTES & SCHE'S.

ADDISON RESIDENTIAL

TOWN OF ADDISON, TEXAS

Huitt - Zollars, Inc.
3131 Mckinney Ave., Suite 600, Dallas, TX 75204
Phone (214) 871-3311/Fax (214) 871-0757

DESIGN	CHECKED	APPR.	SCALE	DATE	PROJECT NO.	NO.
HZI	HZI	DEM	NTS	11/20/08		C40

h:\proj\01340801\dgn\3629ERS01.DGN

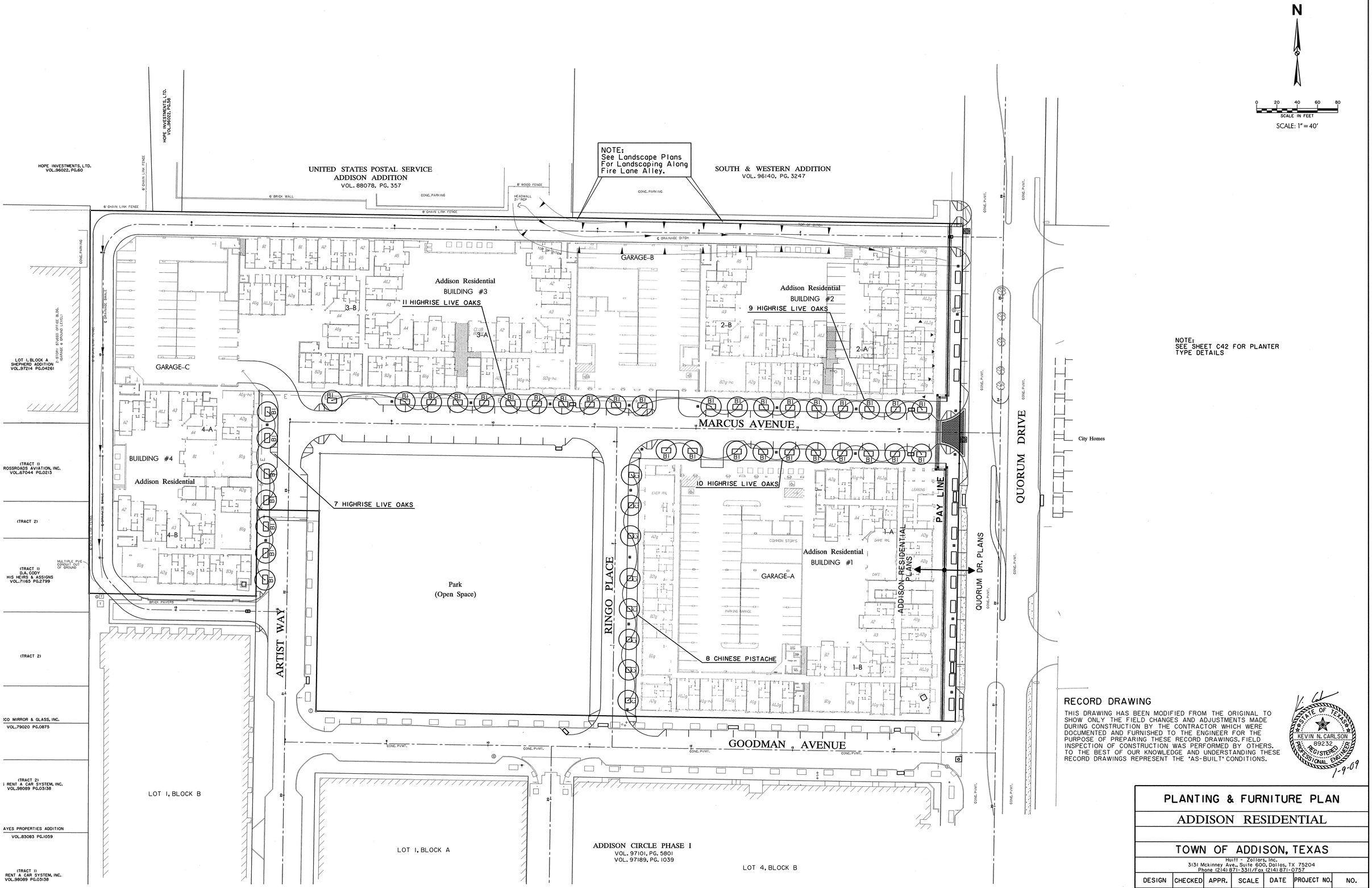

NOTE:
SEE SHEET C42 FOR PLANTER
TYPE DETAILS

RECORD DRAWING

THIS DRAWING HAS BEEN MODIFIED FROM THE ORIGINAL TO SHOW ONLY THE FIELD CHANGES AND ADJUSTMENTS MADE DURING CONSTRUCTION BY THE CONTRACTOR WHICH WERE DOCUMENTED AND FURNISHED TO THE ENGINEER FOR THE PURPOSE OF PREPARING THESE RECORD DRAWINGS. FIELD INSPECTION OF CONSTRUCTION WAS PERFORMED BY OTHERS. TO THE BEST OF OUR KNOWLEDGE AND UNDERSTANDING THESE RECORD DRAWINGS REPRESENT THE 'AS-BUILT' CONDITIONS.

STATE OF TEXAS
KEVIN N. CARLSON
89232
REGISTERED
PROFESSIONAL ENGINEER
1-9-09

PLANTING & FURNITURE PLAN

ADDISON RESIDENTIAL

TOWN OF ADDISON, TEXAS

Huitt - Zollars, Inc.
3131 Mckinney Ave., Suite 600, Dallas, TX 75204
Phone (214) 871-3311/Fax (214) 871-0757

DESIGN	CHECKED	APPR.	SCALE	DATE	PROJECT NO.	NO.
HZI	HZI	DEM	1"=40'	11/20/08		C41

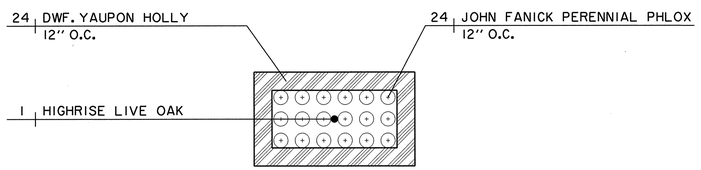

B1 5'X9' TREE WELL PLANTING

SCALE: 1/4"=1'-0"

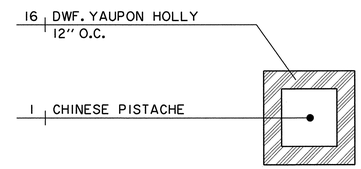

C1 5'X5' TREE WELL PLANTING

SCALE: 1/4"=1'-0"

PLANTING NOTES:

1. SOIL IN THE TREE WELL PLANTERS SHALL BE PREPARED USEING THE EarthKind LANDSCAPE MANAGEMENT PROGRAM. THIS SHALL INCLUDE TILLING THREE INCHES OF EXPANDED SHALE TO A DEPTH OF 6 INCHES, THEN ADDITIONALLY TILLING 3 INCHES OF WELL-COMPOSITED ORGANIC MATTER ON TOP OF THAT. AFTER PLANTING, APPLY A 3 INCH LAYER OF SHREDDED HARDWOOD MULCH. SUBMIT SAMPLES OF ALL SOIL AMENDMENT MATERIALS, INCLUDING MULCH TO THE TOWN FOR APPROVAL PRIOR TO BEGINNING WORK.

2. ALL TREE PIT BACKFILL AND TREE WELL PLANTER TOP SOIL SHALL BE CLEAN, NATIVE BLACK CLAY SOIL FREE OF ROCK 1 INCH OR LARGER. BACKFILL/TOPSOIL SHALL BE APPROVED BY THE TOWN. THE CONTRACTOR SHALL PROVIDE THE SOURCE OF THE SOIL TO THE OWNER FOR REVIEW AND APPROVAL.

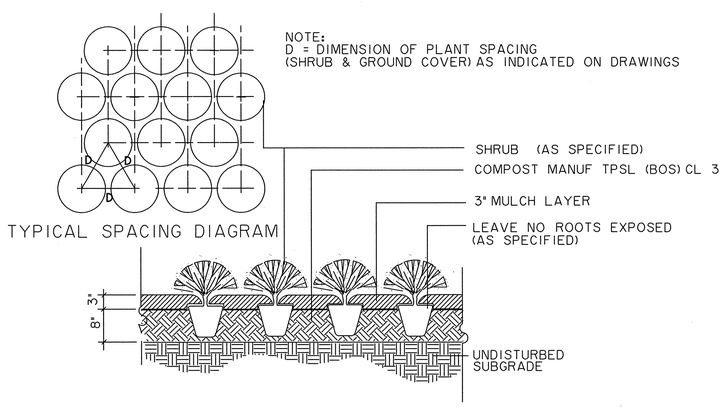

SHRUB PLANTING DETAIL

N.T.S.

RECORD DRAWING

THIS DRAWING HAS BEEN MODIFIED FROM THE ORIGINAL TO SHOW ONLY THE FIELD CHANGES AND ADJUSTMENTS MADE DURING CONSTRUCTION BY THE CONTRACTOR WHICH WERE DOCUMENTED AND FURNISHED TO THE ENGINEER FOR THE PURPOSE OF PREPARING THESE RECORD DRAWINGS. FIELD INSPECTION OF CONSTRUCTION WAS PERFORMED BY OTHERS. TO THE BEST OF OUR KNOWLEDGE AND UNDERSTANDING THESE RECORD DRAWINGS REPRESENT THE "AS-BUILT" CONDITIONS.

STATE OF TEXAS
KEVIN N. CARLSON
89232
REGISTERED
PROFESSIONAL ENGINEER
1-9-09

NOTE:
SEE SHEET C19 FOR SUBSURFACE DRAIN SYSTEM DETAIL

PLANTING DETAILS						
ADDISON RESIDENTIAL						
TOWN OF ADDISON, TEXAS						
Huitt - Zollars, Inc. 3131 Mckinney Ave., Suite 600, Dallas, TX 75204 Phone (214) 871-3311/Fax (214) 871-0757						
DESIGN	CHECKED	APPR.	SCALE	DATE	PROJECT NO.	NO.
HZI	HZI		N.T.S.	11/20/08		C42

h:\proj\01340801\dgn\3629PLANTDETI.DGN

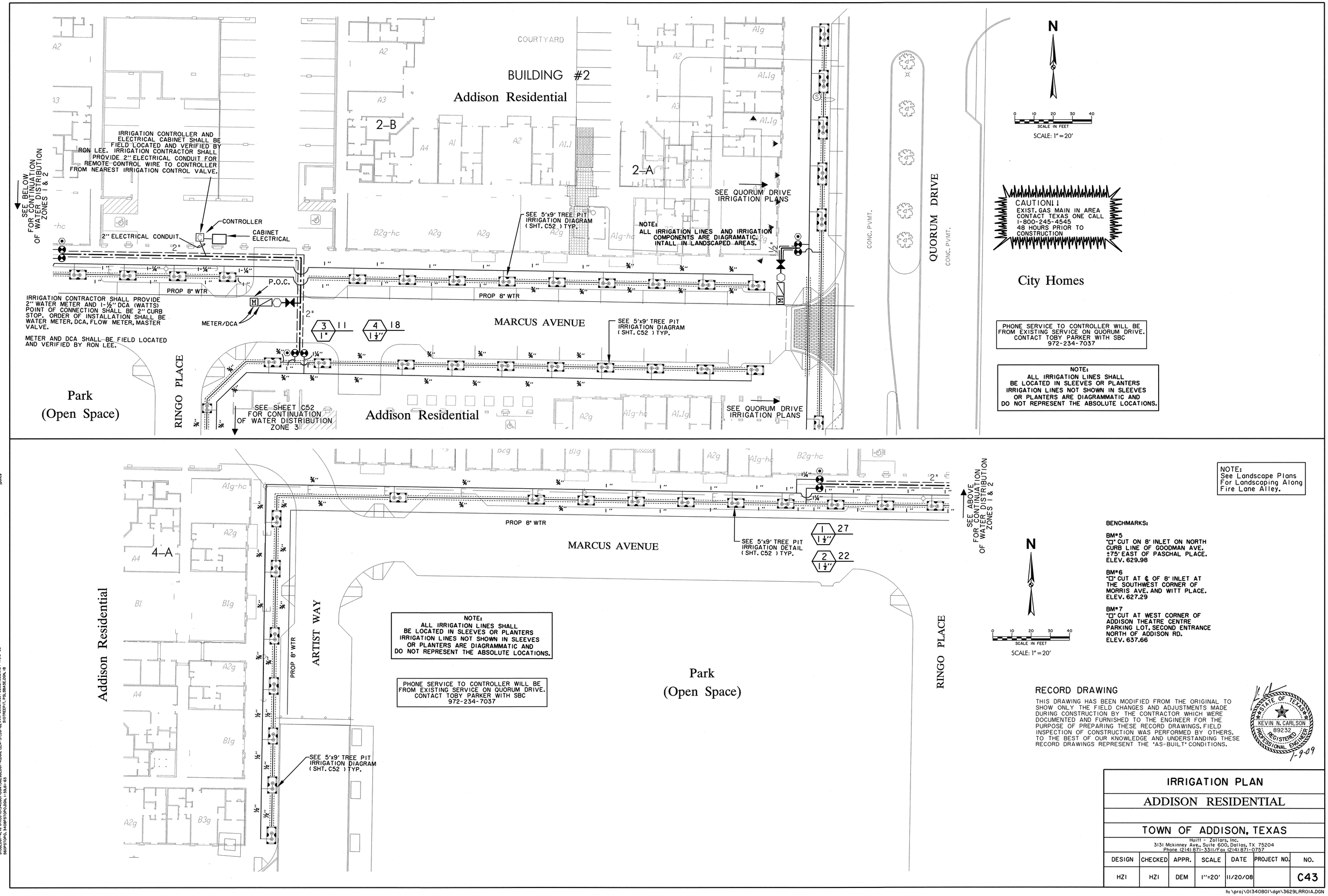

BENCHMARKS:

BM#5
"□" CUT ON 8' INLET ON NORTH CURB LINE OF GOODMAN AVE. ±75' EAST OF PASCHAL PLACE.
ELEV. 629.98

BM#6
"□" CUT AT ℄ OF 8' INLET AT THE SOUTHWEST CORNER OF MORRIS AVE. AND WITT PLACE.
ELEV. 627.29

BM#7
"□" CUT AT WEST CORNER OF ADDISON THEATRE CENTRE PARKING LOT, SECOND ENTRANCE NORTH OF ADDISON RD.
ELEV. 637.66

RECORD DRAWING

THIS DRAWING HAS BEEN MODIFIED FROM THE ORIGINAL TO SHOW ONLY THE FIELD CHANGES AND ADJUSTMENTS MADE DURING CONSTRUCTION BY THE CONTRACTOR WHICH WERE DOCUMENTED AND FURNISHED TO THE ENGINEER FOR THE PURPOSE OF PREPARING THESE RECORD DRAWINGS. FIELD INSPECTION OF CONSTRUCTION WAS PERFORMED BY OTHERS. TO THE BEST OF OUR KNOWLEDGE AND UNDERSTANDING THESE RECORD DRAWINGS REPRESENT THE "AS-BUILT" CONDITIONS.

STATE OF TEXAS
KEVIN N. CARLSON
89232
REGISTERED PROFESSIONAL ENGINEER
1-9-09

IRRIGATION PLAN

ADDISON RESIDENTIAL

TOWN OF ADDISON, TEXAS

Huitt - Zollars, Inc.
3131 Mckinney Ave., Suite 600, Dallas, TX 75204
Phone (214) 871-3311/Fax (214) 871-0757

DESIGN	CHECKED	APPR.	SCALE	DATE	PROJECT NO.	NO.
HZI	HZI	DEM	1"=20'	11/20/08		C43

h:\proj\01340801\dgn\3629LRR01A.DGN

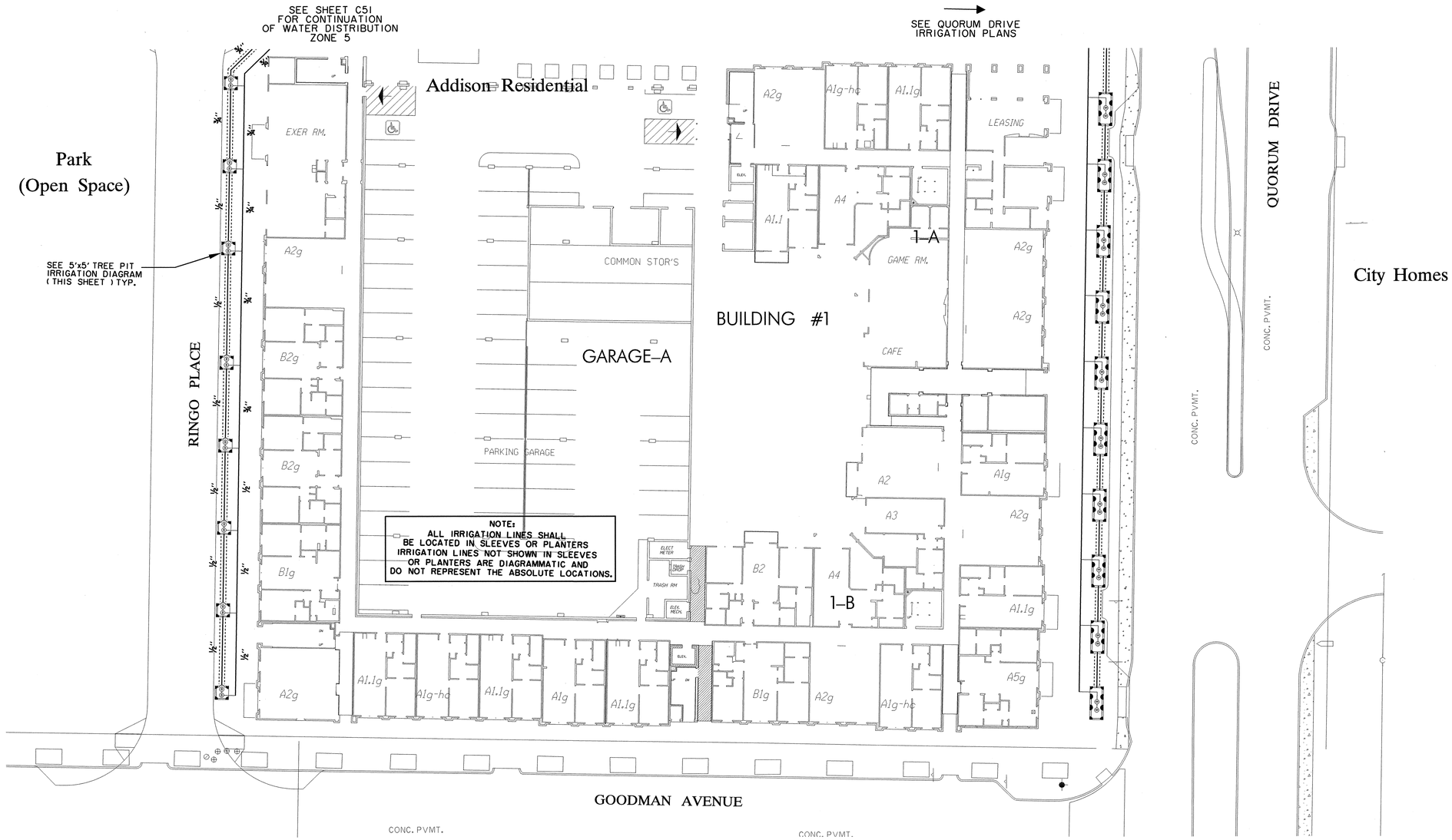

CAUTION!
EXIST. GAS MAIN IN AREA
CONTACT TEXAS ONE CALL
1-800-245-4545
48 HOURS PRIOR TO CONSTRUCTION

PHONE SERVICE TO CONTROLLER WILL BE FROM EXISTING SERVICE ON QUORUM DRIVE. CONTACT TOBY PARKER WITH SBC 972-234-7037

NOTE:
ALL IRRIGATION LINES SHALL BE LOCATED IN SLEEVES OR PLANTERS IRRIGATION LINES NOT SHOWN IN SLEEVES OR PLANTERS ARE DIAGRAMMATIC AND DO NOT REPRESENT THE ABSOLUTE LOCATIONS.

NOTE:
See Landscape Plans For Landscaping Along Fire Lane Alley.

BENCHMARKS:

BM#5
"□" CUT ON 8' INLET ON NORTH CURB LINE OF GOODMAN AVE. ±75' EAST OF PASCHAL PLACE. ELEV. 629.98

BM#6
"□" CUT AT ℄ OF 8' INLET AT THE SOUTHWEST CORNER OF MORRIS AVE. AND WITT PLACE. ELEV. 627.29

BM#7
"□" CUT AT WEST CORNER OF ADDISON THEATRE CENTRE PARKING LOT, SECOND ENTRANCE NORTH OF ADDISON RD. ELEV. 637.66

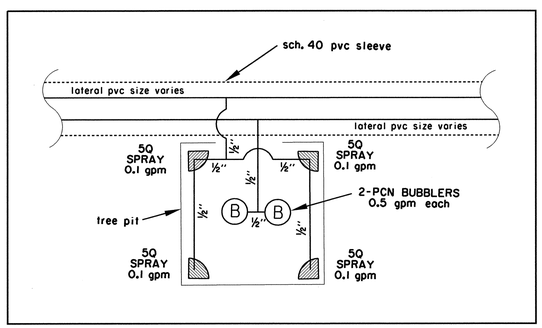

5'x5' TREE PIT DIAGRAM
nts

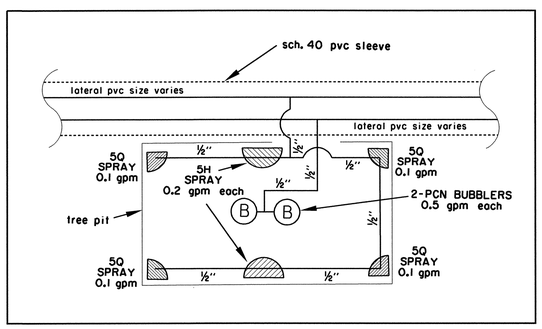

5'x9' TREE PIT DIAGRAM
nts

RECORD DRAWING

THIS DRAWING HAS BEEN MODIFIED FROM THE ORIGINAL TO SHOW ONLY THE FIELD CHANGES AND ADJUSTMENTS MADE DURING CONSTRUCTION BY THE CONTRACTOR WHICH WERE DOCUMENTED AND FURNISHED TO THE ENGINEER FOR THE PURPOSE OF PREPARING THESE RECORD DRAWINGS. FIELD INSPECTION OF CONSTRUCTION WAS PERFORMED BY OTHERS. TO THE BEST OF OUR KNOWLEDGE AND UNDERSTANDING THESE RECORD DRAWINGS REPRESENT THE "AS-BUILT" CONDITIONS.

STATE OF TEXAS
KEVIN N. CARLSON
89232
REGISTERED PROFESSIONAL ENGINEER
1-9-09

IRRIGATION PLAN

ADDISON RESIDENTIAL

TOWN OF ADDISON, TEXAS

Huitt - Zollars, Inc.
3131 Mckinney Ave., Suite 600, Dallas, TX 75204
Phone (214) 871-3311/Fax (214) 871-0757

DESIGN	CHECKED	APPR.	SCALE	DATE	PROJECT NO.	NO.
HZI	HZI	DEM	1"=20'	11/20/08		C44

h:\proj\0134080\dgn\3629LRR01B.DGN

Town of Addison Irrigation Specifications

Revised 04/22/04

These revised specifications supersede any and all others. However, any discrepancies between the approved construction plans and those of the Town MUST be brought to the attention of the Town's designated representative for a final determination. The contractor will present the Town's representative an as-built plan at the final walk-through, along with three Bucker VO75 quick coupling keys with hose-end swivels.

1. All work is to be accomplished by or directly supervised at all times by an on-site Irrigator licensed by the State of Texas.

2. The contractor shall verify the water pressure before the installation begins. If the static pressure is different than that of the design pressure, contact the designer and Town's representative immediately so changes can be made. Send a cax tp the Parks dept. at 972-450-2834 with the current dated and timed static pressure reading. Design head to head with no single head coverage. Use appropriate size nozzles for a given landscape area so as not to spray onto or over paved surfaces or structures. Do not exceed manufacturer's recommendations.

3. The irrigation installer is responsible for resetting head and/or box height due to settling and after turf, groundcover, shrubs, trees, and mulch is added to the landscape areas. The irrigation contractor must supply a workmanship warranty for (1) year from date of acceptance.

4. Plans are diagrammatic and field adjustments are often necessary. For this reason, prior to trenching, valve locations and head layout with flags needs to be done and approved by the Town's irrigation inspector. Not doing so may result in the relocation of heads and/or valves at the irrigation contractor's expense.

5. Water Taps: Water taps will be 2" in size. All parts must conform to the Town of Addison Water Department specifications and are the responsibility of the irritation contractor to provide. Inspection of taps by the Water Department Representative must occur. Excavation and tap permits are required. Contact the Town of Addison Water Department at (972) 450-2871.

6. Water Meters: Only Master or Hersey meters with two (2) brass flanges are acceptable. Meter lay lengths must be in accordance with the Town of Addison Water Department's specifications, housed in appropriate size (to be determined by the Town's Irrigation Inspector) concrete box with lid. New stainless steel bolts and nuts must be used in the installation along with new neoprene gaskets. The box should be level with the final grade using concrete pavers to support and prevent sinking. Backfill inside the box, 3" below meter base with at least 6" of fine (1/2") pea gravel. Connection to main must be approved and inspected by the Town's Water Department Inspector and all tap materials are to be purchased at the expense of the contractor and must comply with the Town of Addison's specifications.

7. Backflow Devices: Only Watts 007 M series inline check valve assemblies with the stainless steel ball valve handles and nuts are to be used. Irrigation contractor shall provide and install brass plugs for the test cocks. Connect to the flange using teflon taped copper nipple of sufficient length to center the DCA within its housing. The device will be housed in an appropriate size, (to be determined by the Town's Irrigation Inspector) rectangular concrete box with lid using concrete pavers for proper stability and height adjustment. The irrigation contractor shall be responsible for the DCA testing in accordance with State of Texas law, using a Licensed Backflow Assembly Tester registered with the Town of Addison Water Department.

8. Sleeves : All paving must have Town approved sleeve sizes and quantities present. It is the responsibility of the irrigation contractor to notify the Town's Irrigation Inspector of any area where sleeves should be present but are not and provide such materials at his cost. Any paving installed without sleeves will necessitate a bore and subsequent materials at the irrigation contractor's expense. All sleeves 2" and smaller will be Schedule 40 PVC with size and location noted on the plan. Larger sizes will be Class 200. All piping underneath paving, including sidewalks, must be sleeved. All sleeves are to be belled end PVC pipe. A minimum length of 12 inches of sleeve material must extend beyond the pavement.

9. Glue and Primer: Use Turftite brand glue on laterals and IPS Grey Heavy Body on main lines and a good quality purple primer on all . Avoid excessive use and wipe excess glue off of all joints and fittings with a clean rag.

10. Pipe: All main line pipe 2 inches and smaller is to be Schedule 40 belled PVC; larger sizes are to be Class 200 belled PVC with a minimum depth of 14" and a maximum depth of 16". Put not more than two (2) pipes in any one trench and separate the main line from the lateral line with at least two (2) inch of cover. Class 200 belled PVC lateral piping is to be used with a minimum depth of 12" and a maximum depth of 14".

11. Fittings: No crosses are permitted. Separate tees, 45's, elbows and other fittings by at least 12 inches. Reduction tees are preferred over use of single reducer bushings. Multiple reducer bushings will not be accepted. Only Spears and/or Lasco fittings are permitted. Allow 18 inches outside of sleeve before the first fitting. No 45 degree elbows on 1 inch and larger pipe are allowed.

12. Valves:
A. Master Valves: Every point of connection to the water supply system shall have a Weathermatic 11000 FCR series valve as the Master Valve, housed in a standard (large) Ametek rectangular plastic valve box with 4 to 6 inches of small (1/2") pea gravel placed underneath the valve in such a manner as to prevent soil infiltration into the box. Use concrete pavers or ricks plaed under edges of valve box for stability. Note: Valve box must not rest on pipe. Blue wire shall be used as the station wire for the Master Valve.

B. Station Valves: Only Weathermatic 11000 FCR series valves are permitted. A Ball Valve will be installed before every station or zone valve. They are to be located within a standard (large) Ametek rectangular plastic valve boxes with 4 to 6 inches of (1/2") pea gravel placed underneath the valve in such a manner as to prevent soil infiltration into the box. The pea gravel should be 2 inches from the bottom of the valve body. A minimum of 3"'s of valve box must extend below bottom of valve. If necessary use valve box extensions.

C. Ball Valves: Female threaded plastic Spears or Lasco ball valves with positive T-handle cut off must be installed on every 200 feet of mainline for isolation purposes. A ball valve is also required to be installed before every station valves. Use 10" Ametek valve box with a minimum of 3" extending below bottomof valve and fill to bottom of valve with½" pea gravel. Use bricks or concrete box.

D. Quick Coupler Valves: Use only Buckner VO75 single lug¾" quick coupling valves with a metal top. They are to be connected to a threaded fitting. Teflon tape and appropriate length of gray schedule 80 nipples and schedule 40 fittings are to be used for the swing joint. Secure to 18 inch by½ inch steel rebar with a stainless steel worm screw clamp. House QCV in a 10 inch round plastic Ametek valve box. Install Spears ball valve prior to each QCV. Bricks or pavers need to be installed under edges of valve boxes for stability. Backfill bottom of box with½" pea gravel half way up body of valve.

E. Flowmeters: Purchase from a Rain Master supplier and install appropriately sized Data Industrial flowmeter. Follow all installation instructions as approved by Rain Master. The irrigation contractor must also purchase from Rain Master and install shielded Rain Master EV-Cab-Sen flow meter cable and install within continuous¾" or larger gray PVC conduit with 6 inch or larger J-boxes placed every 200 feet or where 360 degrees of fittings are installed; only sweep fittings are permitted. Only a continuous run of cable is allowed; no splices will be allowed except at the point of connection to the flow meter. Connections at the flow meter must first be soldered and then water proofed within a 3-M DBY connector. Note: certain Rain Master requirements must also be met regarding installation order and distances of separation between DCA, flow meter, master valve and the first fitting. It is the responsibility of the irrigation contractor to adhere to these requirements. At final walk through, proper operation of the flow meter at the Rain Master controller must be demonstrated by the irrigation contractor.

13. Heads: All heads will be installed using polyethylene green nipples (3/4"x6" for rotors and½"x6" for pop-ups) screwed into threaded fittings unless noted otherwise. No swing joints on 4" pop-ups or rotors will be allowed.

A. Pop-ups - Only Rainbird 1800 series are permitted. Install¾inch above the finished grade.

a. 4 inch pop-ups: turf, tree bubblers within turf areas (use Hunter PCN 10 bubbler nozzles on spray heads.

b. 6 inch pop-ups with no side inlet: very low ground cover (less than 6 inches at mature height).

c.12 inch pop-ups with side inlet: Ground cover and low growing shrubs. The ground cover and shrubs should not be more than 12" at maturity. The Town Inspector reserves the right to determine if and when side inlets installed using funny pipe verses the bottom inlet will be allowed. When authorized, use Hardie Blue Line Pipe with Toro barb fittings.

d. Use½" Sch 80 risers with schrub adapter and Hunter PCN 10 bubbler nozzles for all tree wells with tree grates. Risers shall be a minimum of 2" below bottom of tree grates with nozzle 2" above mulch.

B. Rotors - Only Hunter I-20 Series are permitted, unless noted otherwise. Install¾" above finished grade.

14. Risers: Use Sch 80 PVC with Weathermatic LXS Series shrub head adapters with a ½"x6" green poly cut-off nipple screwed into the threaded fitting in the ground. The irrigation inspector reserves the right to determine placement of risers versus pop-ups.

15. Wiring: All wires will be 14 gauge UF. Station wires will be red. Common wires will be white. Master valve wire will be blue. Anytime the wiring changes direction, such as at an elbow or a tee, allow a loop of at least 12 inches alongside the fitting at that location. Only continuous wire runs are permissible. Wire should follow the main line where possible and lay along a single side not crossing over lateral lines. Wire is to be placed under mainline with 2" of dirt between wire and pipe.

16. Wire Connectors: Use only DBY connectors for all field wire splices other than at the valves themselves. Allow at least 36 inches of pigtailed wire at each splice. Use King One Step tan colored connectors for all valve splices. All valve box splices are to be housed in standard (large) Ametek rectangular plastic valve boxes. All field splices are to be in 10 inch round Ametek plastic valve boxes or standard, large rectangular Ametek plastic valve boxes at the discretion of the Town's representative.

17. Backfilling: Prior to any backfilling of trenches, an inspection by the Town's irrigation representative must take place and any necessary changes implemented; otherwise manual excavation to enable proper inspection will be necessary. Use clean and
approved topsoil to backfill all pipe to a depth. All heads and boxes are to be backfilled to grade with clean topsoil. No rocks greater than 1 inch are allowed. Compact trenches to alleviate settling. Minimal depth of coverage is 12 inches.

18. Valve sequencing must be performed by the contractor and in an order approved by the Town Irrigation Inspector. At least 12 inches of extra station wiring within the bottom of the pedestal is necessary for each zone and must be of neat and orderly appearance.

19. Any deficiencies in coverage noted by the Town's irrigation inspector will be rectified at the cost of the contractor.

20.Controller: A Town irrigation representative will determine the type of controller to be used. All controllers shall have a concrete pad of 36"x36"x6". Pad will be set at 3" above final grade. Install the controller after the concrete pad is completely cured (two days). Use only appropriately sized stainless steel bolts, washers and nuts to secure the controller to the concrete pad. All wiring is to enter the pedestal via appropriately sized PVC sweep elbows extending at least 1" thru and 6" out from under the pad. Control/master valve wiring, flow meter wiring and 120-V service wiring are to be separated with each having its own access elbow. An additional spare¾" sweep elbow for phone service is to be installed as well. All national and local codes must be followed during the installation.

A. A/C controller - Only Irritrol MC Plus controllers will be acceptable. Both Mini-click rain and freeze sensors will be installed and placed where they can operate properly. All non-Rain Master controllers must be permanently wired for quick attachment to a Rain Master remote control unit.

B. Battery and/or Solar Operated Controllers - Only LEIT controllers will be acceptable. Install rain or freeze sensors on these controllers with SKIT8821-4 installation kit. Install on galvanized thick wall poles and set controller panel to height above finished grade to be determined by Town's representative.

C. Rain Master: Only an approved size Rain Master Evolution DX-2 controller with a stainless steel pedestal and heavy duty transient protection is permitted. The controller must include all necessary hardware to ensure reliable communication and operation with the Town's central control located at 16801 Westgrove. Installation must include the following Rain Master hardware, purchased only from a Rain Master supplier: DX-03 sensor board, DX-PH phone communication option, Data Industrial flow meter (same size as the mainline), and shielded EV-CAB-SEN flow meter cable. It is the irrigation contractor's responsibility to entail the cost of and work in conjunction with South Western Bell Telephone to establish a dedicated phone service and install an interface within the pedestal at each controller location via direct burial cable within 1" PVC conduit. The entire installation must conform to Rain Master specifications and be approved by the Town's irrigation inspector prior to and be inspected during installation. Such specifications will include grounding and pad configurations and distances of separation from water meter to DCA to master valve to flow meter and the first fitting. A functional Mini-clik freeze and rain sensor wjith a Hunter bypass switch must be installed in an approved location and by an approved method. For part numbers and pricing of any Rain Master equipment, contact Mark Stricker of John Deere Landscapes at 972-881-0205. For technical questions, call John DuBose of RainMaster at 214-632-2289.

21. Communication is the key. If you are unsure, CALL Ron Lee, the Operations Manager of the Addison Parks Department (972) 450-2863.

BENCHMARKS:

BM#5
"□" CUT ON 8' INLET ON NORTH CURB LINE OF GOODMAN AVE. ±75' EAST OF PASCHAL PLACE. ELEV. 629.98

BM#6
"□" CUT AT ℄ OF 8' INLET AT THE SOUTHWEST CORNER OF MORRIS AVE. AND WITT PLACE. ELEV. 627.29

BM#7
"□" CUT AT WEST CORNER OF ADDISON THEATRE CENTRE PARKING LOT, SECOND ENTRANCE NORTH OF ADDISON RD. ELEV. 637.66

RECORD DRAWING

THIS DRAWING HAS BEEN MODIFIED FROM THE ORIGINAL TO SHOW ONLY THE FIELD CHANGES AND ADJUSTMENTS MADE DURING CONSTRUCTION BY THE CONTRACTOR WHICH WERE DOCUMENTED AND FURNISHED TO THE ENGINEER FOR THE PURPOSE OF PREPARING THESE RECORD DRAWINGS. FIELD INSPECTION OF CONSTRUCTION WAS PERFORMED BY OTHERS. TO THE BEST OF OUR KNOWLEDGE AND UNDERSTANDING THESE RECORD DRAWINGS REPRESENT THE "AS-BUILT" CONDITIONS.

STATE OF TEXAS
KEVIN N. CARLSON
89232
REGISTERED PROFESSIONAL ENGINEER
1-9-09

TOWN OF ADDISON IRRIGATION SPECS.

ADDISON RESIDENTIAL

TOWN OF ADDISON, TEXAS

Huitt - Zollars, Inc.
3131 Mckinney Ave., Suite 600, Dallas, TX 75204
Phone (214) 871-3311/Fax (214) 871-0757

DESIGN	CHECKED	APPR.	SCALE	DATE	PROJECT NO.	NO.
HZI	HZI	DEM	NTS	11/20/08		C45

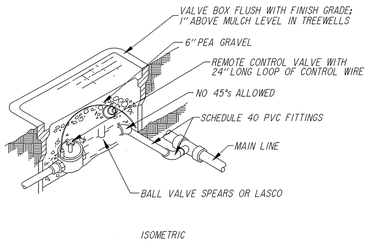

REMOTE CONTROL AND BALL VALVE

not to scale

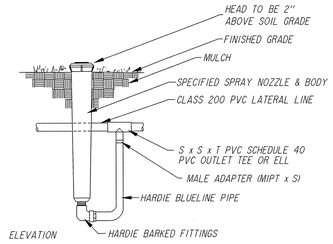

HIGH RISER ASSEMBLY

not to scale

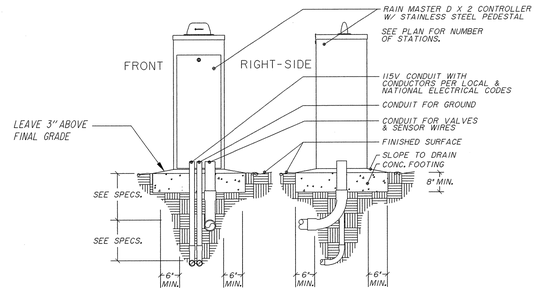

PEDESTAL MOUNTED CONTROLLER

not to scale

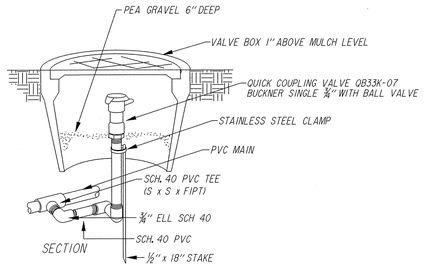

QUICK-COUPLING VALVE

not to scale

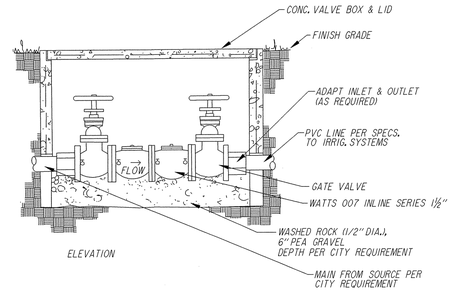

BACKFLOW PREVENTER

not to scale

IRRIGATION LEGEND

- RAINBIRD 1800 POP-UP WITHOUT SIDE INLET. 5' QUARTER NOZZLE (0.1 gpm)
- RAINBIRD 1800 POP-UP WITHOUT SIDE INLET. 5' HALF NOZZLE (0.2 gpm)
- (B) HUNTER PCN BUBBLER NOZZLE (0.5 gpm). USE APPROPRIATE SIZED ½" SCH. 80 RISER SO NOZZLE WILL NOT TOUCH BOTTOM OF GRATE AND NOZZLE WILL BE 2" ABOVE MULCH.
- SCHEDULE 40 PVC MAINLINE
- CLASS 200 PVC LATERAL LINE NOTE: (ALL DIRECTLY BURIED LINE BENEATH PAVING SHALL BE SLEEVED IN SCHEDULE 40 PVC. ALL LINES UNDER PAVING SHALL BE SLEEVED; NO DIRECT BURIAL ALLOWED.)
- 6" CLASS 200 PVC SLEEVE
- 4" SCHEDULE 40 PVC SLEEVE
- 18 / 3 / 1½" — GPM THROUGH VALVE; VALVE SEQUENCING NUMBER; SIZE OF VALVE
- BUCKNER V075 QUICK COUPLING VALVE
- RAIN MASTER FLOW METER
- WEATHERMATIC 11000 FCR SERIES STATION VALVE WITH LASCO OR SPEARS BALL VALVE UP STREAM OF VALVE.
- MASTER VALVE WEATHERMATIC 11000 FCR SERIES
- (M) IRRIGATION WATER METER (MASTER OR HERSEY BRAND) WITH TWO (2) BRASS FLANGES (PROVIDE 1-1/2" IRRIGATION METER WITH 2" TAP)
- WATTS DOUBLE CHECK VALVE: 1-1/2" #007 M SERIES IN LINE QT. IN FLUSH VALVE BOX WITH 2" TAP.
- (C) RAIN MASTER EVOLUTION DX-2 CONTROLLER
- P.O.C. POINT OF CONNECTION TO BE VERIFIED WITH RON LEE.

IRRIGATION NOTES

1. LINE LAYOUT IS DIAGRAMMATIC-ADJUST HEAD AND LINE LOCATIONS ON SITE TO ACCOMMODATE EXISTING JOB CONDITIONS, SLEEVE LOCATIONS AND TO ACHIEVE COMPLETE COVERAGE.
2. ALL MAIN LINE PIPING SHALL BE BURIED TO HAVE A MINIMUM COVER OF 14". ALL LATERAL PIPING DOWNSTREAM OF THE MAIN LINE SHALL BE BURIED TO HAVE A MINIMUM COVER OF 12".
3. ALL VALVE BOXES SHALL BE GREEN LID AND BLACK BODY (AMETEK) TEN(10") INCHES BY FOUTEEN(14") INCHES (RECTANGULAR) FOR REMOTE CONTROL VALVES AND TEN(10") INCHES (ROUND) FOR QUICK COUPLER VALVES.
4. CONTRACTOR SHALL NOTIFY THE LANDSCAPE ARCHITECT, IF THE STATIC PRESSURE IS LESS THAN THE DESIGN STATIC PRESSURE OF 65 PSI. PRESSURE REGULATION AT THE SOURCE SHALL BE REQUIRED IF PRESSURE IS GREATER THAN 75 PSI.
5. ALL WIRING FROM THE IRRIGATION CONTROLLER TO THE REMOTE CONTROL VALVES SHALL BE UF-14/1 DIRECT BURIAL CABLE. (WHITE FOR COMMON, RED FOR STATIONS AND BLUE FOR MASTER VALVE) ALL WIRE SPLICES SHALL BE MADE IN VALVE BOXES ONLY USING KING CONNECTORS AND SEALANT. PROVIDE SCHEDULE 40 SLEEVES FOR WIRE UNDER PAVED AREAS AS REQUIRED.
6. CONTRACTOR SHALL NOT TRENCH IN CRITICAL ROOT ZONE AREA FOR EXISTING TREES.
7. CONTRACTOR SHALL PROVIDE FOR RAINMASTER REMOTE CONTROL SYSTEM.
8. CONTRACTOR SHALL PROVIDE PHONE SERVICE AND ELECTRICAL SERVICE TO THE CONTROLLER.
9. NO FITTINGS WILL BE ALLOWED UNDER PAVED SURFACES WITHOUT SLEEVES.
10. ALL IRRIGATION INSTALLATION SHALL CONFORM TO THE LOCAL CODES AND REGULATIONS.
11. IRRIGATION SYSTEM SHALL BE INSTALLED AND FULLY OPERATIONAL BEFORE LANDSCAPING INSTALLATION.
12. IRRIGATION HEADS SHALL BE PLACED AND ADJUSTED SO AS NOT TO SPRAY ON ANY STRUCTURE, SIDEWALK OR STREET.
13. IRRIGATION HEADS SHALL BE PLACED AND SIZED SO AS NOT TO BE SUSCEPTIBLE TO DAMAGE BY AUTOMOBILE OVERHANGES.
14. IRRIGATION CONTRACTOR SHALL PLACE ADJUSTABLE ARC NOZZLES IN PLACE OF FIXED ARC NOZZLE AS NEEDED TO ELIMINATE OVERSPRAY ON TO PAVEMENT.
15. ***TOWN OF ADDISON'S SPECIFICATIONS SUPERSEDE ALL OTHER SPECIFICATIONS.***

BENCHMARKS:

BM#5
"D" CUT ON 8' INLET ON NORTH CURB LINE OF GOODMAN AVE. ±75' EAST OF PASCHAL PLACE.
ELEV. 629.98

BM#6
"D" CUT AT ℄ OF 8' INLET AT THE SOUTHWEST CORNER OF MORRIS AVE. AND WITT PLACE.
ELEV. 627.29

BM#7
"D" CUT AT WEST CORNER OF ADDISON THEATRE CENTRE PARKING LOT, SECOND ENTRANCE NORTH OF ADDISON RD.
ELEV. 637.66

RECORD DRAWING

THIS DRAWING HAS BEEN MODIFIED FROM THE ORIGINAL TO SHOW ONLY THE FIELD CHANGES AND ADJUSTMENTS MADE DURING CONSTRUCTION BY THE CONTRACTOR WHICH WERE DOCUMENTED AND FURNISHED TO THE ENGINEER FOR THE PURPOSE OF PREPARING THESE RECORD DRAWINGS. FIELD INSPECTION OF CONSTRUCTION WAS PERFORMED BY OTHERS. TO THE BEST OF OUR KNOWLEDGE AND UNDERSTANDING THESE RECORD DRAWINGS REPRESENT THE 'AS-BUILT' CONDITIONS.

STATE OF TEXAS
KEVIN N. CARLSON
89232
REGISTERED PROFESSIONAL ENGINEER
7-9-09

IRRIGATION DETAILS						
ADDISON RESIDENTIAL						
TOWN OF ADDISON, TEXAS						
Huitt - Zollars, Inc. 3131 Mckinney Ave., Suite 600, Dallas, TX 75204 Phone (214) 871-3311/Fax (214) 871-0757						
DESIGN	CHECKED	APPR.	SCALE	DATE	PROJECT NO.	NO.
HZI	HZI	DEM	NTS	11/20/08		C46

h:\proj\0134080l\dgn\3629LRR03.DGN

REF: 3629BLDGN; 2,3,10,59-61
PRF ROTATION=90.000000
h:\proj\0134080l\dgn\3629LRR03.DGN
h:\proj\0134080l\dgn\3629LRR03.prf
\\WXDALLAS2\USGO\PLOTTING\400N\3629lrr03.prf
jpence
no ref logo(s), *no ref name(s)*, *no ref levels*