GENERAL NOTES & TYPICAL DETAILS

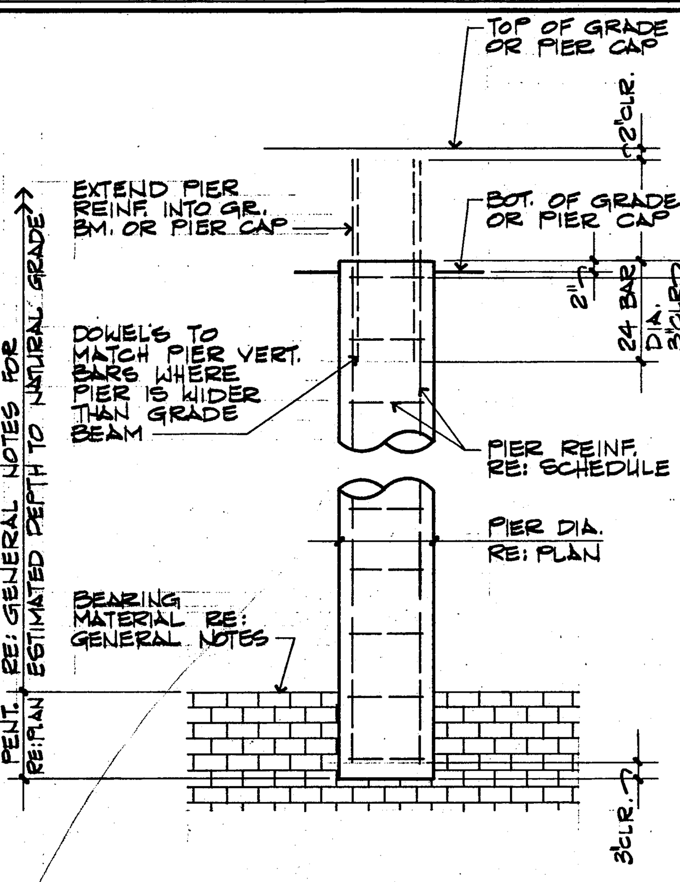

TYPICAL PIER ELEVATION

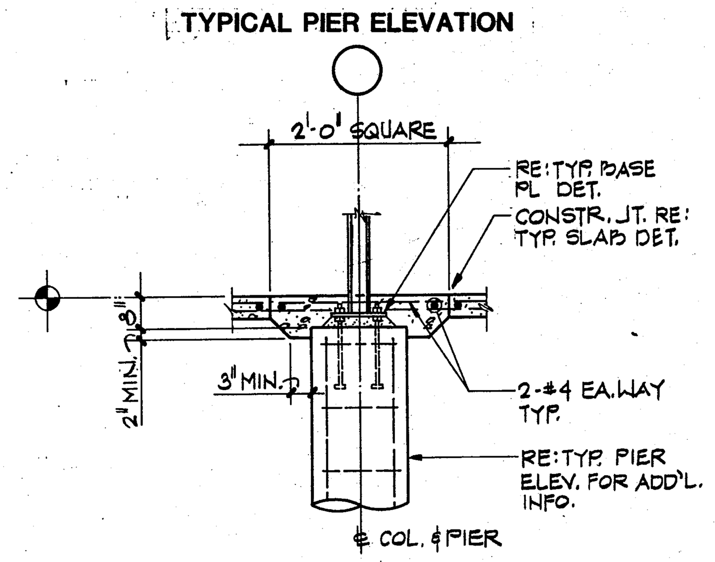

TYPICAL INTERIOR PIER

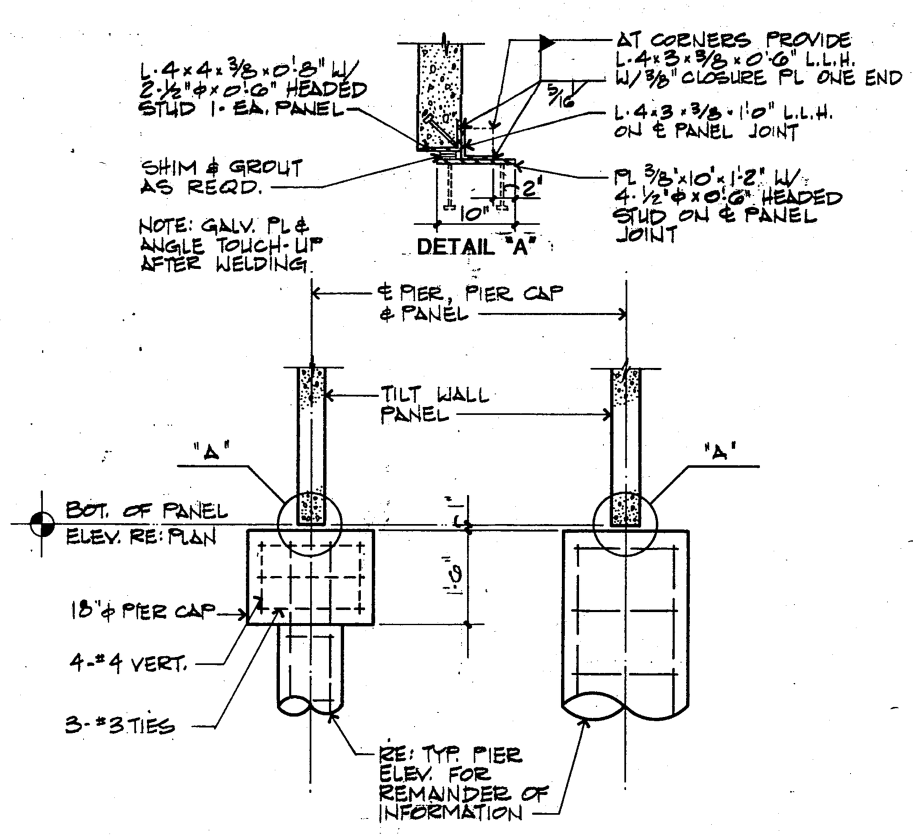

TYPICAL PIER AT TILT WALL PANEL

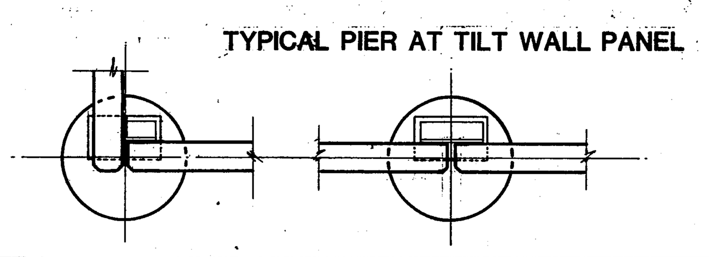

PIER SCHEDULE

MK	SHAFT DIA./ PENETRATION	VERT. REINF.	TIE SIZE & SPACING	REMARKS
P1	18"/12"	6 #5	#3@10"	
P2	18"/24"	6 #5	#3@10"	
P3	12"/12"	1 #7	———	
P4				
P5				

PIER NOTES

1. THE CONTRACTOR SHALL VERIFY DEPTHS OF PIERS BEFORE PIER STEEL IS CUT. PIER STEEL SHALL BE DELIVERED TO THE JOB SITE IN STANDARD 60'-0" LENGTHS AND CUT AS REQUIRED. 30 BAR DIA. LAPS WILL BE ALLOWED IN THE PIER STEEL IF NO MORE THAN 50 PERCENT OF THE BARS ARE LAPPED IN ANY 5'-0" LENGTH OF THE PIER.
2. THE OWNER'S TESTING AGENCY SHALL MAKE ACCURATE MEASUREMENTS OF THE DEPTH OF PENETRATION INTO THE BEARING STRATA TO BE ASSURED OF CONFORMANCE WITH THE DEPTH OF PENETRATION REQUIRED BY THE TYPICAL PIER DETAIL AND SUBMIT A REPORT OF DEPTHS OF PENETRATION DRILLED TO THE ARCHITECT AND ENGINEER.
3. PIER HOLES SHALL BE CONCRETED WITHIN 8 HOURS AFTER DRILLING.

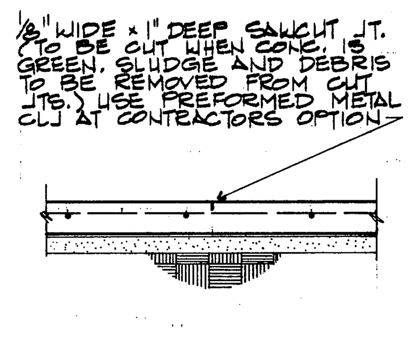

CONTROL JOINT (CLJ)

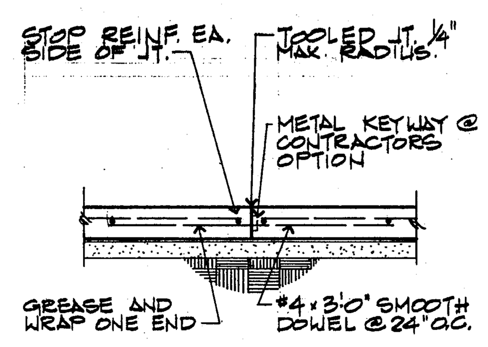

CONSTRUCTION JOINT (CJ)

CONTRACTOR NOTE:

PROVIDE CONTROL JTS. OR CONSTRUCTION JTS. WHERE INDICATED ON PLAN. CONSTRUCTION JTS. MAY BE SUBSTITUTED FOR CONTROL JTS. AT CONTRACTORS OPTION. BUT AT NO TIME SHOULD CONTROL JTS. BE SUBSTITUTED FOR CONSTRUCTION JTS. UNLESS APPROVED BY ENGINEER.

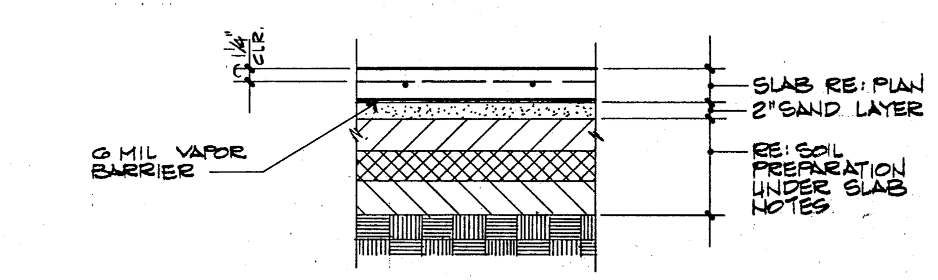

SECTION – SLAB AND SUBGRADE

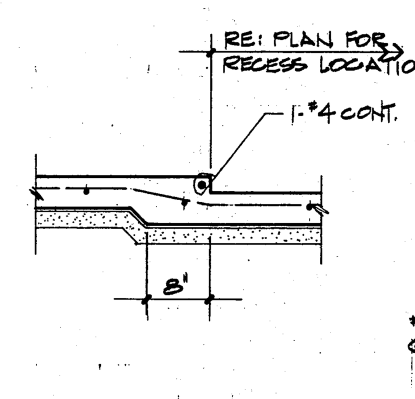

DROP LESS THAN 4"

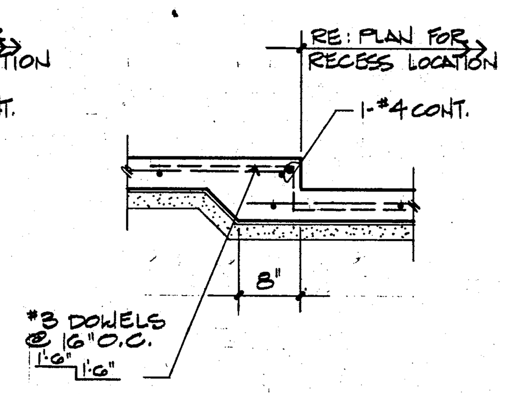

DROP 4" OR GREATER

SLAB RECESS

SOILS PREPARATION UNDER SLAB NOTES

1. PLACE ALL FLOOR SLABS ON A MINIMUM OF TWO AND ONE/HALF (2.5) FEET OF SELECT FILL. USE SELECT FILL HAVING A PLASTICITY INDEX BETWEEN FOUR (4) AND TWELVE (12). PLACE SELECT FILL IN LOOSE LIFTS NOT TO EXCEED EIGHT (8) INCHES. UNIFORMLY COMPACT SELECT FILL TO A MINIMUM OF NINETY-FIVE (95) PERCENT OF STANDARD PROCTOR DRY DENSITY (ASTM D-698) AND AT LEAST OPTIMUM MOISTURE CONTENT. REFERENCE SOILS REPORT FOR SPECIFIC FILL REQUIREMENTS.
2. PRIOR TO SELECT FILL PLACEMENT, THE SUBGRADE SHALL BE SCARIFIED TO A DEPTH OF SIX (6) INCHES AND RECOMPACTED TO AT LEAST NINETY-FIVE (95) PERCENT OF STANDARD PROCTOR DRY DENSITY (ASTM D698) AND A MOISTURE CONTENT OF AT LEAST THE OPTIMUM VALUE, AS DEFINED BY ASTM D-698.
3. USE SAME SELECT FILL FOR BACKFILLING UNDERSLAB UTILITY TRENCHES; REFER TO THE SOILS REPORT FOR SPECIFIC REQUIREMENTS. BACKFILL AT ALL EXTERIOR GRADE BEAMS WITH EXISTING SITE SOIL.

TOWN OF ADDISON
BUILDER'S COPY OF PLANS
This set of plans contains various corrections and comments made by the City Staff. All trades will be required to comply with these corrections and comments; failure to inform all trades of this information will not be accepted as a reason to approve construction which is in violation of local ordinances.
This set of plans is to be kept on the job site at all times and is to be made available for use by city inspectors at their request. Failure to have these plans available may delay approval of a requested inspection.

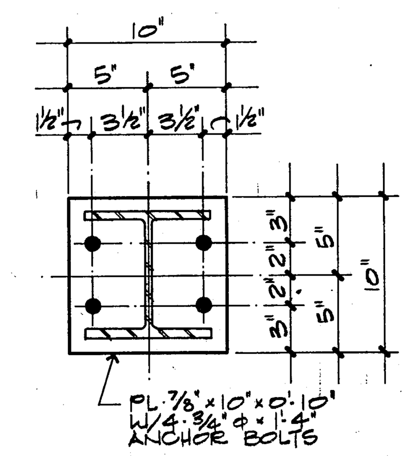

PLAN

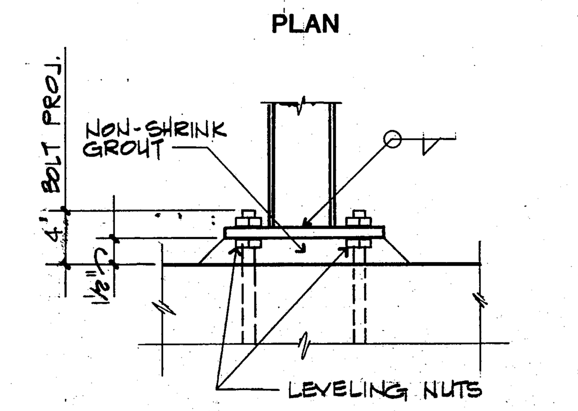

ELEVATION

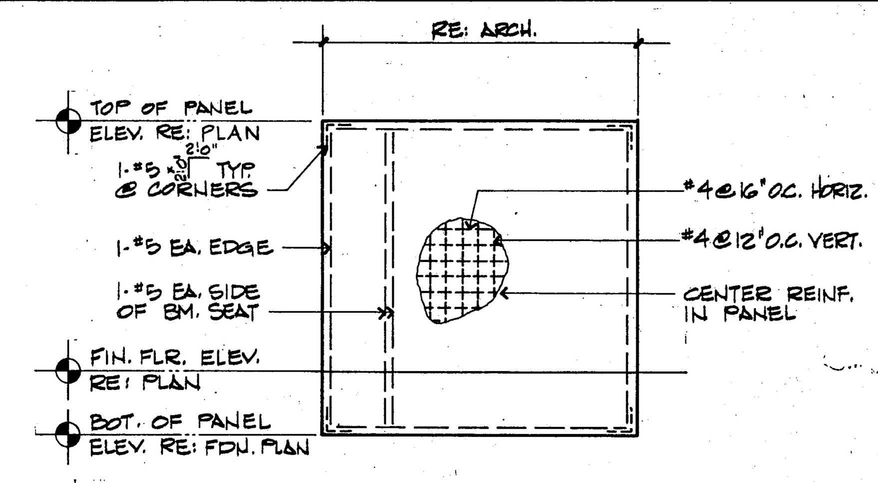

TYPICAL TILT WALL PANEL ELEVATION

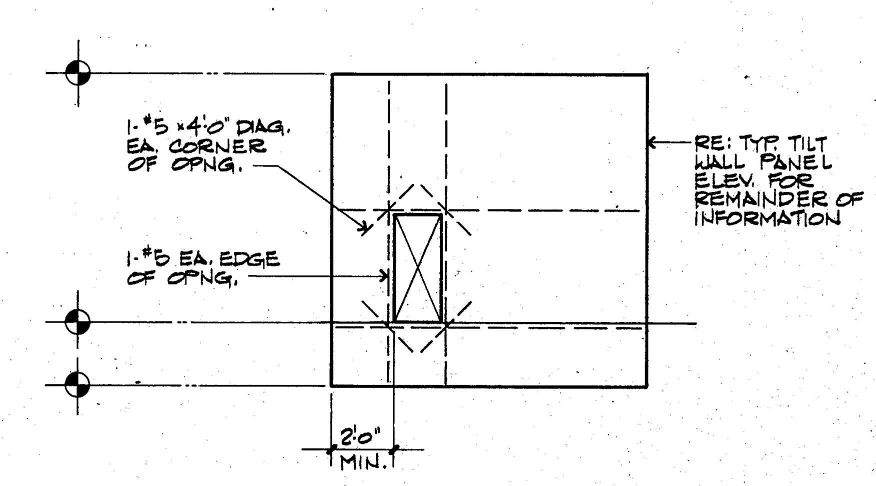

TYPICAL TILT WALL PANEL ELEVATION WITH OPENING

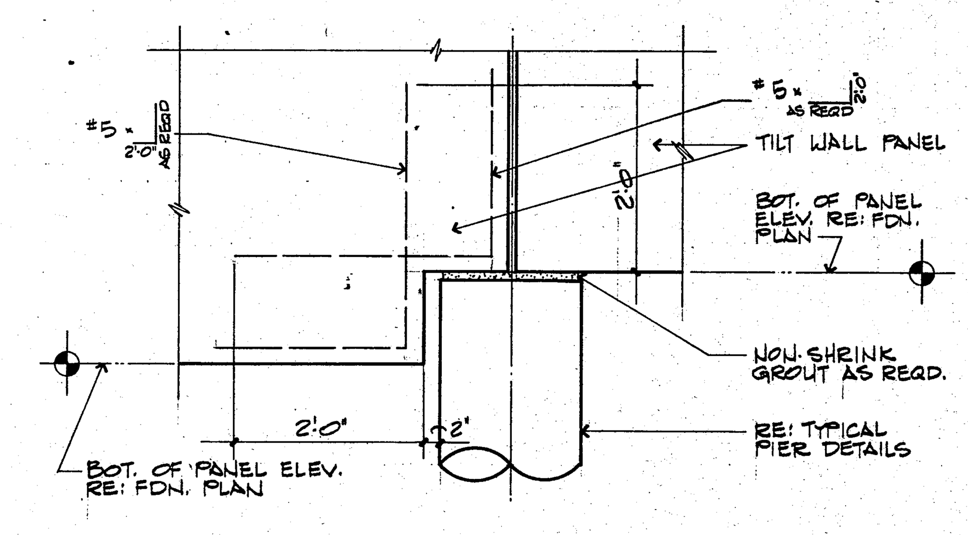

TYPICAL TILT WALL PANEL DETAIL AT STEP IN BOTTOM OF PANEL ELEVATION

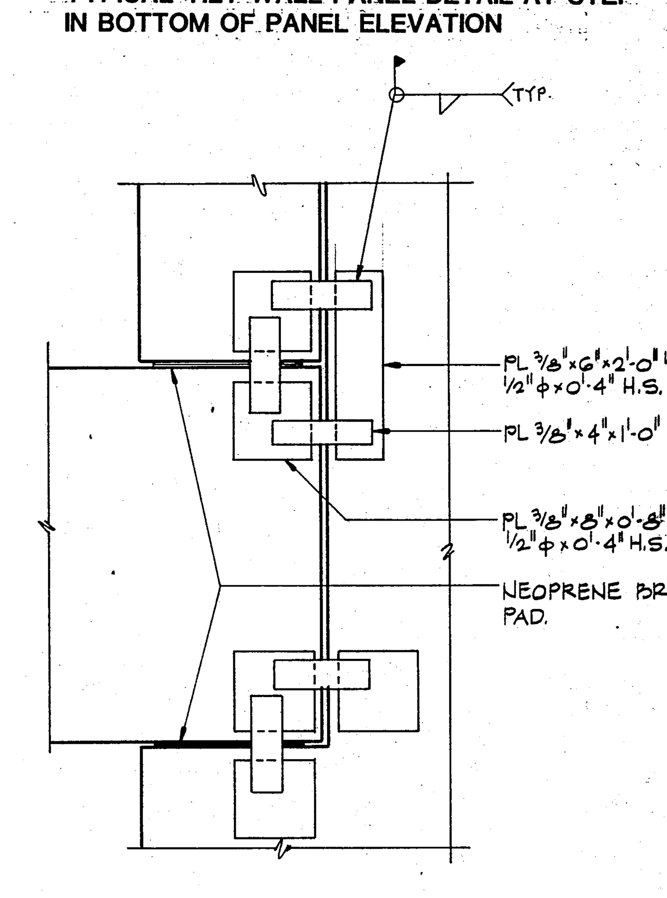

CONNECTION AT SUSPENDED PANELS

TILT WALL PANEL NOTES

A. PANEL THICKNESS SHALL BE 7-1/4" TYPICAL.
B. REINFORCING STEEL COVERAGE IN PANELS SHALL BE 3/4" MINIMUM.
C. SEE STRUCTURAL DETAILS FOR ALL DOWELS TO SLAB, CONNECTIONS FOR STEEL BEAMS AND STEEL JOIST, ANGLES SUPPORTING DECK, ETC.
D. CONTRACTOR SHALL SUBMIT TO ENGINEER, THE METHOD OF LIFTING PANELS PRIOR TO POURING PANELS, AND SHALL FURNISH AND INSTALL LIFTING INSERTS AND ANY ADDITIONAL REINFORCING REQUIRED BY LIFTING METHOD.
E. SEE ARCHITECTURAL, MECHANICAL, ELECTRICAL AND STRUCTURAL DRAWINGS AND DETAILS FOR ALL BOLTS, PLATES, DOWELS, REGLETS, CHAMFERS, REVEALS, FINISHES, CONDUIT, BOXES, ETC., TO BE CAST INTO PANELS, CONTRACTOR SHALL COORDINATE THE PLACEMENT OF ALL SUCH MATERIALS TO BE CAST INTO PANELS.

REPRODUCTION NOTE

THE USE OF REPRODUCTIONS OF THESE CONTRACT DRAWINGS BY ANY CONTRACTOR, SUB-CONTRACTOR, ERECTOR, FABRICATOR, OR MATERIAL SUPPLIER IN LIEU OF PREPARATION OF SHOP DRAWINGS SHALL NOT BE PERMITTED.

1. CODES & DESIGN SPECIFICATION
   A. BUILDING CODE: UNIFORM BUILDING CODE, 1982
   B. STRUCTURAL STEEL: 1978 SPECIFICATION FOR THE DESIGN, FABRICATION AND ERECTION OF STRUCTURAL STEEL FOR BUILDINGS OF THE AMERICAN INSTITUTE OF STEEL CONSTRUCTION.
   C. STRUCTURAL CONCRETE: 1983 BUILDING CODE FOR REINFORCED CONCRETE OF THE AMERICAN CONCRETE INSTITUTE (ACI 318-83)
2. DESIGN LIVE LOADS
   ROOF ....20 PSF
   OFFICE....................40 PSF
   PARTITION....................20 PSF
   MEZZANINE STORAGE....................100 PSF
   BASIC WIND PRESSURE....................13 PSF
   EXPOSURE B
3. SOILS REPORT
   A. IDENTIFICATION
   "GOETECHNICAL INVESTIGATION FOR 8400 SQUARE FEET BUILDING, DOOLEY ROAD, ADDISON, TEXAS.", BY SOUTHWESTERN LABORATORIES, DALLAS, TEXAS (80-286) DATED MARCH 24, 1980.
   B. FOUNDATION SYSTEM
   1) UTILIZE STRAIGHT DRILLED CONCRETE SHAFTS SITUATED WITHIN THE BLUE LIMESTONE STRATA WHICH WAS ENCOUNTERED AT A DEPTH OF APPROXIMATELY 12'-6" BELOW EXISTING GRADE.
   2) DESIGN VALUES
   a) END BEARING....................50,000 PSF
   b) SIDE FRICTION....................6,000 PSF
4. CONCRETE
   A. ALL CONCRETE WORK SHALL BE IN ACCORDANCE WITH THE A.C.I. STANDARD "BUILDING CODE REQUIREMENTS FOR REINFORCED CONCRETE: (A.C.I. 318-83)".
   B. NORMAL-WEIGHT CONCRETE, (W-145PCF): AIR ENTRAINED, EXCEPT FOR PIERS, MINIMUM COMPRESSIVE STRENGTHS: 3,000 PSI.
   C. SHORE PROPERLY BEFORE BACKFILLING AGAINST EARTH RETAINING WALLS.
   D. FACES OF GRADE BEAMS NOT EXPOSED MAY BE EARTH FORMED, PROVIDED BEAM WIDTHS SHOWN ON THESE DRAWINGS ARE INCREASED BY 2".
   E. DETAILS ON STRUCTURAL DRAWINGS REPRESENT CONCRETE WHICH IS NOT "EARTH-FORMED".
   F. CONTRACTOR SHOULD MAKE ALLOWANCES, AS NOTED IN "D", BASED UPON THE INTENDED CONSTRUCTION PROCEDURE.
   G. SEE ARCHITECTURAL DRAWINGS FOR FLOOR ELEVATIONS, SLOPES, AND THE LOCATION OF FLOOR DEPRESSIONS.
5. REINFORCING STEEL
   A. BARS – CONFORM TO ASTM A-615 – GRADE 60, DOWELS AND STIRRUPS – GRADE 40.
   B. WELDED WIRE FABRIC – CONFORM TO ASTM A-185 OR A-497. FURNISH IN FLAT SHEETS.
   C. DETAILING – CONFORM TO ACI DETAILING MANUAL, 315-74. REINFORCING STEEL COVERAGE:
   PIERS....................3" BOTTOM AND SIDES
   GRADE BEAMS....................1-1/2" TOP, 3" BOTTOM, 2" SIDES (3" SIDES IF EARTH FORMED)
   D. LAP CONTINUOUS UNSCHEDULED REINFORCING STEEL AS FOLLOWS:
   BOTTOM BARS IN MEMBERS SUPPORTED BY COLUMNS OR PIERS – 12" AT SUPPORTS ONLY, ALL OTHERS – 36 BAR DIAMETERS AT MIDSPAN.
   E. PROVIDE 90 DEGREE BENDS AND 12" RETURNS AT CORNERS FOR HORIZONTAL WALL REINFORCING.
   F. SPACE STIRRUPS FROM FACE OF SUPPORT.
   G. PROVIDE STANDARD BAR CHAIRS WITH SHEET METAL BASES AT SLABS ON GRADE. BAR CHAIRS SHALL BE SPACED AT 4' – 0" MAXIMUM CENTERS EACH WAY.
6. STEEL FRAMING
   A. STRUCTURAL STEEL SHALL CONFORM TO THE AISC "SPECIFICATION FOR THE DESIGN, FABRICATION AND ERECTION OF STRUCTURAL STEEL FOR BUILDINGS: 1978 EDITION".
   B. CONFORM TO ASTM A-36, A-53-B (FOR PIPE) AND A-500-B (FOR TUBING), AND THE STANDARDS OF THE AMERICAN INSTITUTE OF STEEL CONSTRUCTION.
   C. UNLESS NOTED OTHERWISE, PROVIDE FRAMED BEAM CONNECTIONS IN ACCORDANCE WITH PART 4, AISC MANUAL – 3/4" ASTM A-325 BOLTS. DESIGN FOR SHEARS IN TABLES FOR ALLOWABLE LOADS ON BEAMS, PART 2.
   D. FIELD CONNECTIONS SHALL BE EQUIVALENT TO STANDARD BOLTED CONNECTIONS USING 3/4" ASTM A-325 BOLTS UNLESS OTHERWISE SHOWN. CONNECTIONS SHALL BE BOLTED OR WELDED – SEE DETAILS.
   E. WELDING SHALL CONFORM TO THE "CODE FOR WELDING IN BUILDING CONSTRUCTION" BY THE AMERICAN WELDING SOCIETY, LATEST EDITION. WELDS NOT CALLED OUT ON DRAWINGS SHALL BE 3/16" CONTINUOUS FILLET WELDS. WELDING ELECTRODES SHALL CONFORM TO AWS A5.1 OR A5.5 E70XX.
   F. ANCHOR BOLTS SHALL CONFORM TO ASTM A-307 FOR HEADED A.B. AND A-36 FOR UNHEADED AND HOOKED A.B., AND SHALL BE SET USING RIGID TEMPLATES.
   G. PREGROUTING OF BASE PLATES WILL NOT BE PERMITTED.
7. OPEN-WEB JOISTS
   A. DESIGN, FABRICATION AND ERECTION OF OPEN-WEB JOISTS SHALL CONFORM TO SPECIFICATIONS OF THE STEEL JOIST INSTITUTE.
   B. UNLESS SHOWN OTHERWISE, JOISTS SHALL BE WELDED TO SUPPORTING BEAMS WITH A 3/16" FILLET WELD, 1-1/2" LONG, ON EACH SIDE OF EACH END. AT COLUMNS NOT FRAMED WITH BEAMS IN BOTH DIRECTIONS, PROVIDE BOLTED CONNECTION FOR NEAREST ADJACENT JOIST.
   C. PROVIDE BRIDGING FOR JOISTS AS SHOWN ON DRAWINGS AND IN ACCORDANCE WITH THE LATEST EDITION OF THE STANDARD SPECIFICATIONS OF THE STEEL JOIST INSTITUTE.
   D. JOISTS SHALL BE CAMBERED AS SPECIFIED BY THE STEEL JOIST INSTITUTE, UNLESS NOTED OTHERWISE.
8. STEEL DECK
   A. DESIGN, FABRICATION AND ERECTION OF METAL DECK SHALL CONFORM TO THE STEEL DECK INSTITUTES "CODE OF RECOMMENDED STANDARD PRACTICE AND BASIC DESIGN SPECIFICATIONS", LATEST EDITION.
   B. WELDING MATERIALS AND PROCEDURES SHALL BE MADE TO ENSURE AGAINST BURNING OF HOLES IN DECK.
   C. MAJOR OPENINGS ARE SHOWN ON THE DRAWINGS. OPENINGS NOT SHOWN ON THE DRAWINGS AND LARGER THAN 12" SQUARE OR ROUND SHALL HAVE STRUCTURAL STEEL FRAMING AROUND OPENINGS FOR DECK SUPPORT. ALL OPENINGS SHALL BE SHOWN ON SHOP DRAWINGS, VERIFIED BY CONTRACTOR AS TO SIZE AND LOCATION.
   D. COORDINATE MECHANICAL UNIT OPENINGS WITH UNIT MANUFACTURERS.
   E. FLOOR DECK SHALL BE GALVANIZED CORRUGATED STEEL DECK WITH THE FOLLOWING TYPE GAGE AND PHYSICAL PROPERTIES (PER FOOT WIDTH):
   GAGE: 28
   MOMENT OF INERTIA: 0.011 IN 4/FT
   SECTION MODULUS: 0.035 IN 3/FT
   MINIMUM DEPTH: 19/35"(NOMINAL)
   SLAB REINF.: 4 X 4 – W2.1 X W2.1
   USE: VULCRAFT TYPE .6C28 OR APPROVED EQUAL.
   F. FLOOR DECK WELDS SHALL CONFORM TO THE FOLLOWING PATTERN:
   1) SIDE LAPS: WELD AT EACH JOIST
   2) AT END SUPPORTS: WELD AT 12" O.C.
   G. ROOF DECK SHALL BE PAINTED STEEL DECK WITH THE FOLLOWING TYPE GAGE AND PHYSICAL PROPERTIES (PER FOOT WIDTH):
   ROOF DECK..............GAGE: 22
   MOMENT OF INERTIA 0.120 IN 4/FT
   SECTION MODULUS: 0.111 IN 3/FT
   MINIMUM DEPTH: 1-1/2" (NOMINAL)
   USE: VULCRAFT 1.5F22 OR APPROVED EQUAL.
   H. ROOF DECK WELDS SHALL CONFORM TO THE FOLLOWING PATTERNS USING STARDARD WELDING WASHERS AT SUPPORTING MEMBERS.
   1) SIDE LAPS: #12 SELF TAPPING SCREWS AT 18" O.C.
   2) AT INTERMEDIATE SUPPORTS: WELDS AT 12" O.C.
   AT END SUPPORTS: WELDS AT 6" O.C.
   3) AT PERIMETER OF ROOF: WELDS AT 12" O.C.

PRELIMINARY DRAWING
NOT TO BE USED FOR CONSTRUCTION

INTERFIELD ENGINEERING CO.
CONSULTING ENGINEERS
5401 N. CENTRAL EXPWY.
SUITE 340
DALLAS, TEXAS 75205
(214) 526-6854

STATE OF TEXAS
[illegible] CADDUMI
[illegible]
REGISTERED PROFESSIONAL ENGINEER

EDI ARCHITECTS, INC.
ARCHITECTURE PLANNING ENGINEERING INTERIOR DESIGN
8440 WALNUT HILL LANE AMERICAN BANK TOWER
SUITE 100 SUITE 300
DALLAS, TEXAS 75231 AUSTIN, TEXAS 78701
214 / 750-1945 512 / 469-8308

TOWN OF ADDISON

ADDITION TO PUBLIC WORKS SERVICE CENTER
Westgrove Road Addison Texas

DATE:
11 JUNE 86
24 JULY 1986 – BID

SHEET NO:
S1.1
OF SHEETS
JOB NO: 851-137