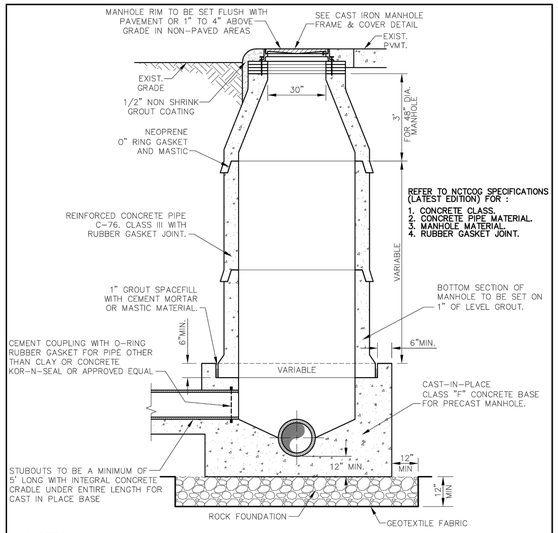

NOTES:

1. IF FALSE MANHOLE BOTTOMS ARE REQUIRED, THEY SHALL BE CONSTRUCTED, INSTALLED, AND REMOVED PER WASTEWATER MANHOLE FALSE BOTTOM STD. DETAIL.
2. WHERE MANHOLE'S ARE OUTSIDE OF PAVEMENT, FRAME & COVER SHALL BE CENTERED IN 5'x5' CONCRETE PAD CLASS 'A' CONCRETE, 4" THICK
3. ALL MANHOLES SHALL PASS VACUUM TEST AS PER NCTCOG SPECIFICATIONS

PUBLIC WORKS DEPARTMENT	PRECAST CONCRETE PIPE MANHOLE ALTERNATE "A"	STANDARD CONSTRUCTION DETAILS WASTEWATER		
		DATE: AUGUST, 2010	REV DATE: –	SHEET : SD-WW06

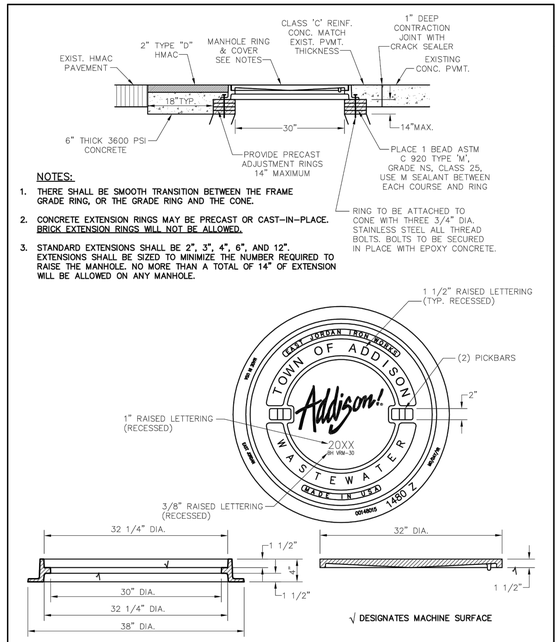

√ DESIGNATES MACHINE SURFACE

NOTES:

1. THERE SHALL BE SMOOTH TRANSITION BETWEEN THE FRAME GRADE RING, OR THE GRADE RING AND THE CONE.
2. CONCRETE EXTENSION RINGS MAY BE PRECAST OR CAST-IN-PLACE. BRICK EXTENSION RINGS WILL NOT BE ALLOWED.
3. STANDARD EXTENSIONS SHALL BE 2", 3", 4", 6", AND 12". EXTENSIONS SHALL BE SIZED TO MINIMIZE THE NUMBER REQUIRED TO RAISE THE MANHOLE. NO MORE THAN A TOTAL OF 14" OF EXTENSION WILL BE ALLOWED ON ANY MANHOLE.

PUBLIC WORKS DEPARTMENT	CAST IRON MANHOLE FRAME AND COVER	STANDARD CONSTRUCTION DETAILS WASTEWATER		
		DATE: AUGUST, 2010	REV DATE: –	SHEET : SD-WW11

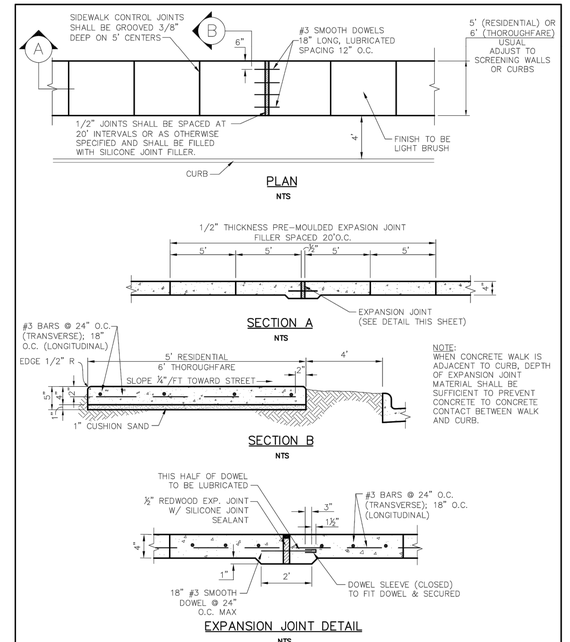

PUBLIC WORKS DEPARTMENT	CONCRETE SIDEWALK	STANDARD CONSTRUCTION DETAILS PAVING		
		DATE: AUGUST, 2010	REV DATE: –	SHEET : SD-P26

NOTES:

1. THE FINISHED GRADE IN ALL AREAS DISTURBED DURING DRIVEWAY CONSTRUCTION SHALL RECEIVE SOLID SOD.
2. WHEN SIDEWALK CROSSES DRIVEWAYS, THE CROSS SLOPE SHALL NOT EXCEED 2%.

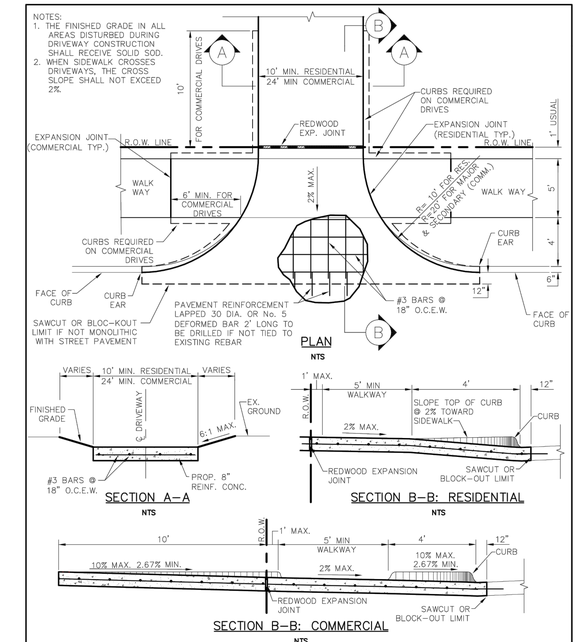

PUBLIC WORKS DEPARTMENT	DRIVEWAY RETURN DETAILS	STANDARD CONSTRUCTION DETAILS PAVING		
		DATE: AUGUST, 2010	REV DATE: –	SHEET : SD-P35

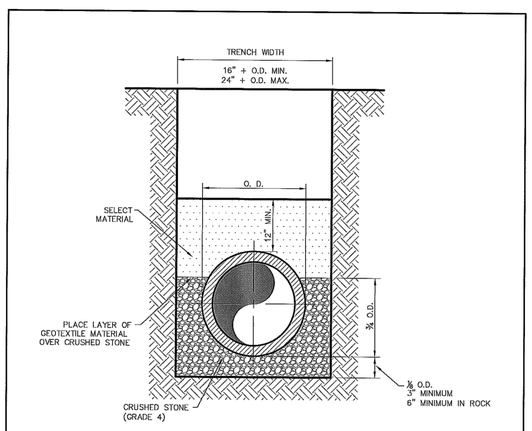

CLASS "B+" EMBEDMENT

CRUSHED STONE SHALL BE 3/4", PASSING # 4 SIEVE

TYPICAL P.V.C. WATER MAIN EMBEDMENT

PUBLIC WORKS DEPARTMENT	P.V.C. WATER MAIN EMBEDMENT	STANDARD CONSTRUCTION DETAILS WATER		
		DATE: AUGUST, 2010	REV DATE: –	SHEET : SD-W01

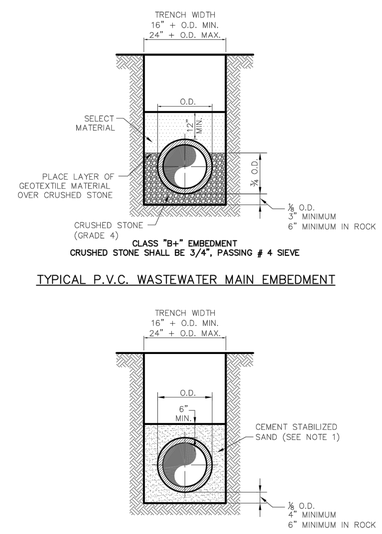

CLASS "B+" EMBEDMENT

CRUSHED STONE SHALL BE 3/4", PASSING # 4 SIEVE

TYPICAL P.V.C. WASTEWATER MAIN EMBEDMENT

NOTE:

1. CEMENT STABILIZED SAND SHALL HAVE A MINIMUM OF 10% CEMENT PER CUBIC YARD OF CEMENT STABILIZED SAND MIXTURE, BASED ON LOOSE DRY WEIGHT VOLUME (AT LEAST 2.5 BAGS OF CEMENT PER CUBIC YARD OF MIXTURE). THE USE OF BROWN COLORING IN CEMENT STABILIZED SAND IS REQUIRED FOR PRESSURE RATED WASTEWATER MAIN AND LATERAL BEDDING.

P.V.C. WASTEWATER MAIN CEMENT STABILIZED SAND EMBEDMENT

PUBLIC WORKS DEPARTMENT	P.V.C. WASTEWATER MAIN EMBEDMENT	STANDARD CONSTRUCTION DETAILS WASTEWATER		
		DATE: AUGUST, 2010	REV DATE: –	SHEET : SD-WW01

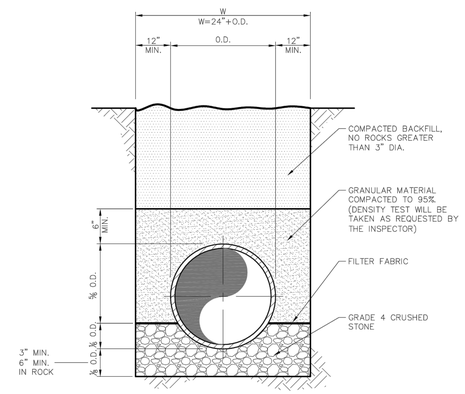

RCP STORM SEWER PIPE BEDDING

NTS

NOTE:

1. THE DEPTH OF TRENCH BELOW THE PROPOSED CONDUIT SHALL BE AS FOLLOWS:
   - 3" MIN. FOR 27" PIPE & SMALLER.
   - 4" MIN. FOR 30" TO 60" PIPE.
   - 6" MIN. FOR 66" PIPE OR LARGER.

PUBLIC WORKS DEPARTMENT	RCP STORM SEWER PIPE BEDDING	STANDARD CONSTRUCTION DETAILS STORM DRAINAGE		
		DATE: AUGUST, 2010	REV DATE: –	SHEET : SD-D03

STORM SEWER – GENERAL NOTES:

1. ALL CONCRETE DRAINAGE STRUCTURES SHALL BE CLASS C CONCRETE MINIMUM.
2. ALL CRUSHED STONE SHALL BE 3/4", PASSING #4 SIEVE (GRADE 4).
3. ALL FIELD JOINTS WILL BE APPROVED BY THE TOWN ENGINEER IF NECESSARY. FIELD JOINTS SHALL BE WIPED ON THE INSIDE AND OUTSIDE TO PROVIDE FOR SMOOTH FLOW OF WATER.
4. RAMNECK COMPOUND OR APPROVED EQUAL SHALL BE USED FOR JOINT SEALS.
5. ALL STORM SEWER PIPE SHALL BE CAMERA INSPECTED AFTER THE INSTALLATION OF ALL PAVING AND UTILITIES AND PRIOR TO FINAL ACCEPTANCE OF THE PROJECT.

PUBLIC WORKS DEPARTMENT	STORM SEWER GENERAL NOTES	STANDARD CONSTRUCTION DETAILS STORM DRAINAGE		
		DATE: AUGUST, 2010	REV DATE: –	SHEET : SD-D01