SPECTRUM DR.
Ext. N+S

DAVE'S OFFICE
12/31/03

CIVIL AND LANDSCAPE PLANS FOR CONSTRUCTION OF
PAVING, STREETSCAPE AND UTILITY IMPROVEMENTS

SPECTRUM DRIVE
NORTH / SOUTH EXTENSION

TOWN OF
ADDISON

SHEET NO.	INDEX OF DRAWINGS
1	COVER SHEET
2	HORIZONTAL CONTROL PLAN
3	TYPICAL SECTIONS
4-8	PAVING PLANS & PROFILES
9	PAVING DETAILS
10-11	STREETSCAPE PLANS
12-13	STREETSCAPE DETAILS
14	PLANTING DETAILS
15-16	DRAINAGE AREA MAPS
17	DRAINAGE CALCULATIONS
18-23	DRAINAGE PLANS & PROFILES
24-27	DRAINAGE DETAILS & NOTES
28-33	WATER PLANS & PROFILES
34-35	WATER DETAILS
36-38	WASTEWATER PLANS & PROFILES
39	WASTEWATER DETAILS
40	EROSION CONTROL PLAN
41	EROSION CONTROL DETAILS
42-44	ELECTRICAL DUCT BANK PLANS & PROFILES
45-53	ELECTRICAL DUCT BANK DETAILS
54-54A	STREET LIGHT CONDUIT & POWER PLAN
55	STREET LIGHT DETAILS & NOTES
56	RAILROAD CROSSING PLAN
57	RAILROAD CROSSING DETAILS
58	RETAINING WALL PLAN
59	RETAINING WALL DETAILS
60-62	SIGNALIZATION PLANS
63-67	TRAFFIC SIGNAL DETAILS
68	SIGNAGE & STRIPING PLAN
69-70	IRRIGATION PLANS
71-72	IRRIGATION DETAILS & NOTES
73-74	PAVING CROSS-SECTIONS

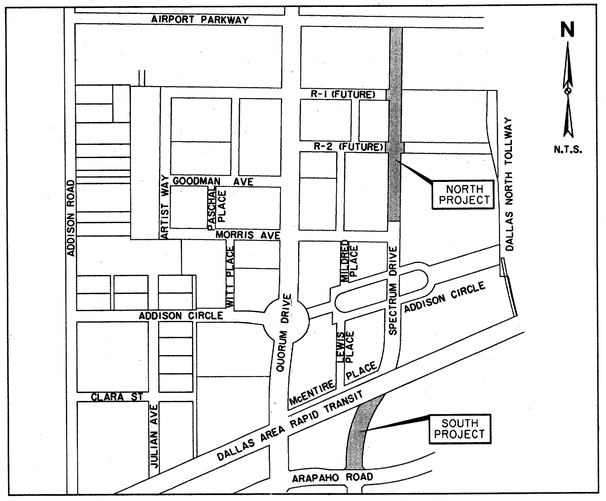

LOCATION MAP

OWNER:

TOWN OF ADDISON
DEPARTMENT OF PUBLIC WORKS
16801 WESTGROVE
P.O. BOX 9010
ADDISON, TEXAS 75001
(972) 450-2871 FAX (972) 450-2837

ENGINEER:

HUITT-ZOLLARS, INC.
3131 McKINNEY AVE., SUITE 600
DALLAS, TEXAS 75204
(214) 871-3311 FAX (214) 871-0757
DAVID E. MEYERS, P.E.
TX. REG. NO. 81512

STATE OF TEXAS
DAVID E. MEYERS
81512
REGISTERED
PROFESSIONAL ENGINEER
1/5/04

ISSUED FOR CONSTRUCTION 1/05/04

FF 8
FF-8

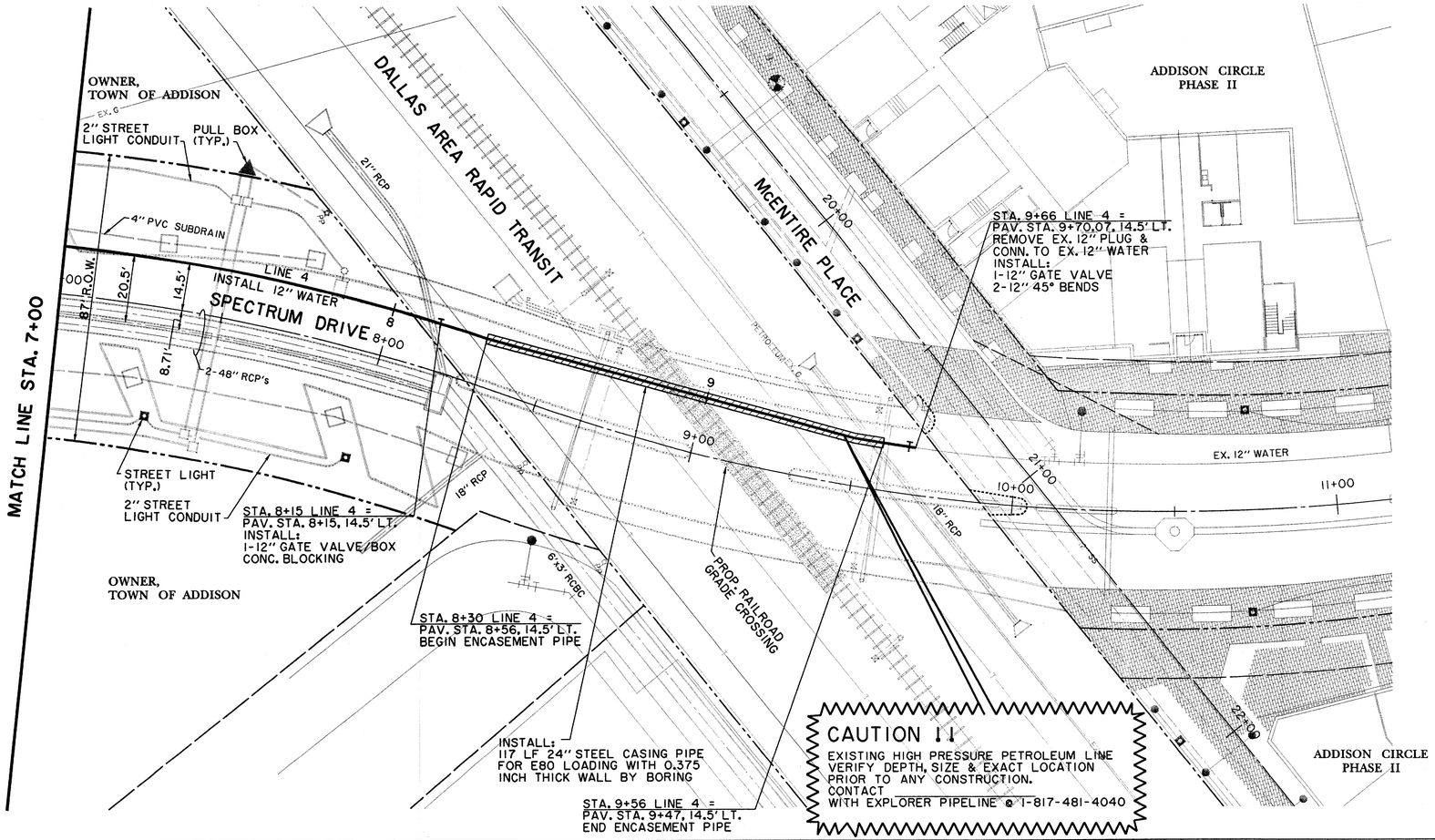

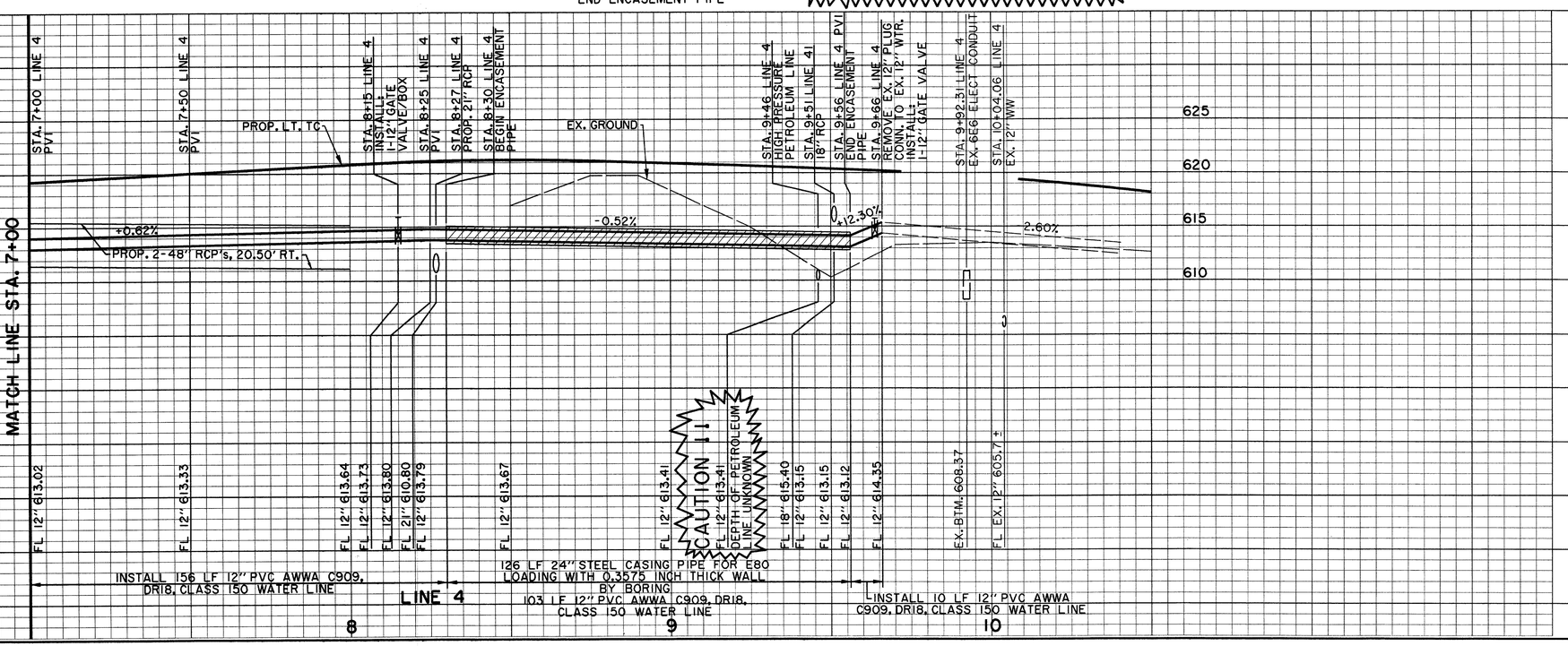

NOTES:

1. METERS, METER CANS, VAULTS AND BACKFLOW PREVENTION ASSEMBLIES TO BE INSTALLED AND TESTED PER TOWN OF ADDISON GENERAL REQUIREMENTS.

2. INCLUDE "LOCATOR WIRE" ON ALL PLASTIC WATER MAINS.

3. ALL FITTINGS SHALL BE ANCHORED BY FLANGE, RESTRAINING GLAND OR ANCHOR COUPLING.

BENCHMARKS:

"□" CUT SOUTHWEST CORNER OF CURB INLET, WEST SIDE OF SPECTRUM DRIVE, ±30' NORTH OF MORRIS AVENUE.
ELEV. 611.84

"X" CUT ON CONC. TOP OF CURB OF MEDIAN NOSE ON SPECTRUM DRIVE AT INTERSECTION OF McENTIRE PLACE.
ELEV. 619.30

STATE OF TEXAS
DAVID E. MEYERS
81512
REGISTERED PROFESSIONAL ENGINEER
11/5/03
115104

DATE	DESCRIPTION	REF NO.
1/05/04	ISSUED FOR CONSTRUCTION	
11/07/03	ISSUED FOR BID	

WATER PLAN & PROFILE
LINE 4 - SPECTRUM DRIVE
SPECTRUM DRIVE EXTENSION
TOWN OF ADDISON, TEXAS

Hulitt - Zollars, Inc.
3131 Mckinney Ave., Suite 600, Dallas, TX 75204
Phone (214) 871-3311/Fax (214) 871-0757

DESIGN	DRAWN	APPR.	SCALE	DATE	PROJECT NO.	NO.
HZI	HZI	DEM	H: 1"=20' V: 1"=6'	NOV 2003	01-3220-01	33

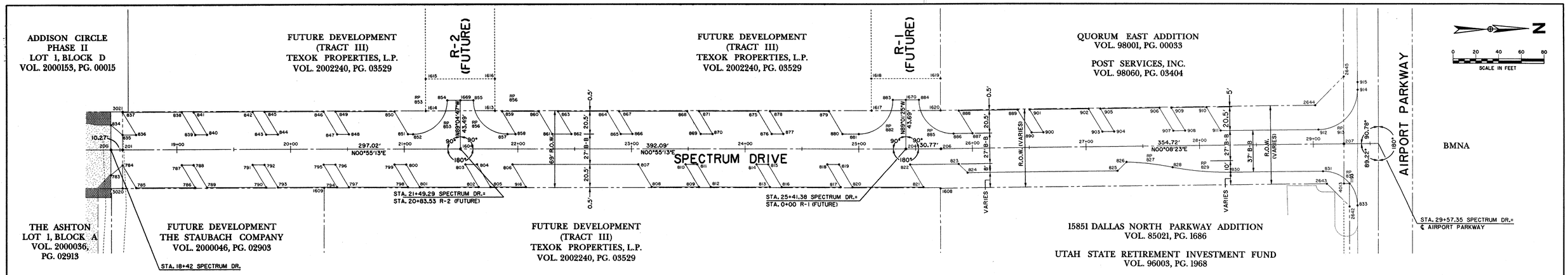

PAVING DATA

PT. NO.	NORTHING	EASTING
700	9746.47100	10513.44300
701	9786.47100	10513.48000
702	9786.56100	10473.48000
703	9799.72900	10473.51000
704	9799.09900	11060.51200
705	9854.88600	10476.16700
706	9863.61200	10498.77500
707	9914.94800	10506.80700
708	9906.08900	10483.85300
709	9917.73100	10486.13500
710	9923.81600	10509.00100
711	9973.98200	10522.53600
712	9967.65500	10498.75500
713	9979.17300	10502.34000
714	9982.75300	10525.73000
715	10031.16200	10544.60500
716	10027.44500	10520.29000
717	10038.53100	10525.11100
718	10039.34500	10548.34600
719	10085.22300	10572.73600
720	10084.40300	10549.18000
721	10096.69700	10557.40200
722	10096.26300	10581.98500
723	10114.00900	10596.53800
724	10114.46100	10570.94500
725	10313.19100	10346.08500
726	10147.29800	10596.04400
727	10490.14400	10079.46200
728	10191.66000	10622.88400
729	10246.70700	10649.67100
730	10259.65000	10655.02500
731	10287.73200	10665.72100
732	9746.57800	10395.41200
733	9776.57800	10395.45800
734	9777.22300	10425.45100
735	9780.44700	10575.41700
736	9826.71900	10432.73200
737	9872.99100	10290.04700
738	9858.66900	10439.36200
739	9834.79400	10688.21900
740	9934.26800	10458.86100
741	10033.74100	10229.50300
742	9965.80800	10470.09700
743	9970.51800	10471.44700
744	9964.53400	10448.29400

PAVING DATA

PT. NO.	NORTHING	EASTING
745	9984.56200	10453.85100
746	9990.72600	10477.70700
747	9999.38200	10480.62500
748	9995.44600	10457.20500
749	10024.65500	10468.10600
750	10028.58500	10491.52300
751	10136.41900	10211.57300
752	10050.20000	10498.91600
753	9963.98100	10786.26000
754	10118.55800	10529.14900
755	9799.09900	11060.51200
756	10156.13800	10553.63600
757	10164.34500	10559.31100
758	10222.87800	10594.21300
759	10262.61000	10612.96700
760	10266.54400	10609.02700
761	10264.09800	10603.31600
762	10259.96500	10605.09100
763	10132.98800	10559.59000
764	10145.77300	10568.35200
765	10177.08900	10588.97200
766	10192.42400	10598.08200
767	10191.47600	10599.84300
768	10190.48000	10601.57800
769	10179.81100	10595.30800
770	10143.47000	10571.62100
771	10130.77000	10562.91700
772	10131.87800	10561.25500
773	10223.43100	10614.68900
774	10233.85400	10619.75700
775	10273.62600	10636.88800
776	10286.37700	10642.74100
777	10285.97000	10643.65400
778	10285.57500	10644.57200
779	10275.83100	10642.02200
780	10236.23300	10625.29500
781	10221.64800	10618.27000
782	10222.54000	10616.47900
783	11121.27800	10712.19300
784	11131.69100	10703.34700
785	11143.19400	10724.03500
786	11195.15000	10724.86800
787	11183.64500	10704.18100
788	11194.03600	10704.34800
789	11205.53900	10725.03600

PAVING DATA

PT. NO.	NORTHING	EASTING
790	11257.49500	10725.86900
791	11245.99000	10705.18200
792	11256.38100	10705.34900
793	11267.88400	10726.03700
794	11319.84000	10726.87000
795	11308.33500	10706.18300
796	11318.72600	10706.35000
797	11330.22900	10727.03800
798	11382.18500	10727.87100
799	11370.68000	10707.18400
800	11381.07100	10707.35100
801	11392.57400	10728.03900
802	11444.53000	10728.87200
803	11433.02500	10708.18500
804	11443.41600	10708.35200
805	11454.91900	10729.04000
806	11474.58900	10708.85300
807	11585.35300	10710.63400
808	11596.85800	10731.32200
809	11638.42100	10731.98900
810	11626.91600	10711.30200
811	11637.30700	10711.46800
812	11648.81000	10732.15600
813	11700.76600	10732.98900
814	11689.26100	10712.30200
815	11699.65200	10712.46900
816	11711.15500	10733.15700
817	11763.11100	10733.99000
818	11751.60600	10713.30300
819	11761.99700	10713.47000
820	11773.50000	10734.15800
821	11835.84400	10735.15800
822	11824.37900	10714.53800
823	11867.19500	10714.94800
824	11874.94500	10722.96700
825	12006.94600	10723.28900
826	12014.87500	10715.52600
827	12003.83400	10965.28200
828	12055.39700	10720.65800
829	12106.96100	10476.03300
830	12106.35100	10726.03200
831	12187.72100	10726.23000
832	12187.64800	10756.23000
833	12217.64600	10756.59600
834	11122.00400	10667.18900

PAVING DATA

PT. NO.	NORTHING	EASTING
835	11132.12500	10676.35100
836	11143.95900	10676.54100
837	11132.45400	10655.85400
838	11184.40800	10656.68800
839	11195.91300	10677.37500
840	11206.30400	10677.54200
841	11194.79900	10656.85500
842	11246.75300	10657.68900
843	11258.25800	10678.37600
844	11268.64900	10678.54300
845	11257.14400	10657.85600
846	11309.09800	10658.69000
847	11320.60300	10679.37700
848	11330.99400	10679.54400
849	11319.48900	10658.85700
850	11371.44300	10659.69100
851	11382.94800	10680.37800
852	11387.53800	10680.46300
853	11388.09000	10650.46800
854	11418.08700	10650.93800
855	11441.08400	10651.33000
856	11471.08000	10651.80300
857	11470.61100	10681.80000
858	11477.73200	10681.91100
859	11466.22100	10661.21300
860	11498.54900	10661.73400
861	11510.05500	10682.42200
862	11526.88900	10682.69300
863	11515.38400	10662.00600
864	11558.80400	10662.70300
865	11570.30600	10683.38900
866	11580.69600	10683.55600
867	11569.19500	10662.87000
868	11629.18000	10663.83300
869	11640.68500	10684.52000
870	11651.07600	10684.68700
871	11639.57100	10664.00000
875	11691.52500	10664.83400
876	11703.03000	10685.52100
877	11713.42100	10685.68800
878	11701.91600	10665.00100
879	11753.87000	10665.83500
880	11765.37600	10686.52300
881	11779.69300	10686.75300
882	11780.17500	10656.75700

PAVING DATA

PT. NO.	NORTHING	EASTING
883	11810.17400	10657.03400
884	11833.17100	10657.42600
885	11863.16600	10657.93700
886	11863.09300	10687.93700
887	11879.79100	10687.97800
888	11868.00500	10667.44900
889	11919.96700	10667.57600
890	11931.75300	10688.10500
900	11942.14500	10688.13000
901	11930.35900	10667.60100
902	11982.32100	10667.72800
903	11994.10700	10688.25700
904	12004.49900	10688.28200
905	11992.71300	10667.75300
906	12044.67500	10667.88000
907	12056.46100	10688.40900
908	12066.85300	10688.43400
909	12055.06700	10667.90500
910	12086.24400	10667.98100
911	12098.22600	10688.85400
912	12184.27500	10689.22100
913	12184.36100	10654.22100
914	12219.35800	10654.69300
915	12219.44800	10647.96800
916	11486.09300	10729.53900

C.L. DATA

ID	Northing	Easting
200	11121.63901	10689.68370
201	11131.90773	10689.84865
204	11820.92919	10700.91661
206	11851.69411	10701.41079
207	12206.41027	10702.27562
1422	9800.49360	10460.51321
1423	9759.09909	11060.51159
1424	10144.62134	10569.98700
1425	10490.14359	10079.46241
1478	9705.47494	10460.29237
1604	11428.88942	10694.61916
1669	11429.58794	10651.13404
1670	11821.63095	10657.22929
5049	10274.73100	10639.46010

RIGHT OF WAY DATA

PT. NO.	NORTHING	EASTING
1193	12210.89590	10737.43105
1608	11851.24994	10735.90811
1609	11315.39350	10727.30051
1613	11459.93960	10660.61348
1614	11398.94747	10659.63374
1615	11399.39718	10631.63735
1616	11460.38932	10632.61709
1617	11791.34663	10665.93696
1618	11791.78847	10637.94045
1619	11852.49073	10638.89845
1620	11852.01324	10666.91147
2568	10158.44456	10622.11492
2588	10126.11310	10600.97732
2630	10102.81086	10492.62502
2631	9800.59586	10416.51333
2636	9800.39134	10504.51309
2637	10117.47320	10604.68934
2638	9776.49226	10504.45755
2639	9756.93872	10524.41215
2640	9756.57792	10396.41097
2641	9776.54565	10416.45743
2642	12210.60300	10757.42891
2643	12190.89596	10737.38229
2644	12186.91563	10667.72799
2645	12207.20847	10647.77889
3020	11131.35362	10724.34420
3021	11132.46185	10655.35309
4013	12205.89554	10737.41886

BENCHMARKS:

"□" CUT SOUTHWEST CORNER OF CURB INLET, WEST SIDE OF SPECTRUM DRIVE, ±30' NORTH OF MORRIS AVENUE.
ELEV. 611.84

"□" CUT ON TOP EAST END OF CURB INLET ON NORTH SIDE OF MORRIS AVENUE AND ±150' EAST OF QUORUM DRIVE CENTERLINE.
ELEV. 616.39

"X" CUT ON CONC. TOP OF CURB OF MEDIAN NOSE ON SPECTRUM DRIVE AT INTERSECTION OF McENTIRE PLACE.
ELEV. 619.30

STATE OF TEXAS
DAVID E. MEYERS
81512
REGISTERED PROFESSIONAL ENGINEER
1/5/04

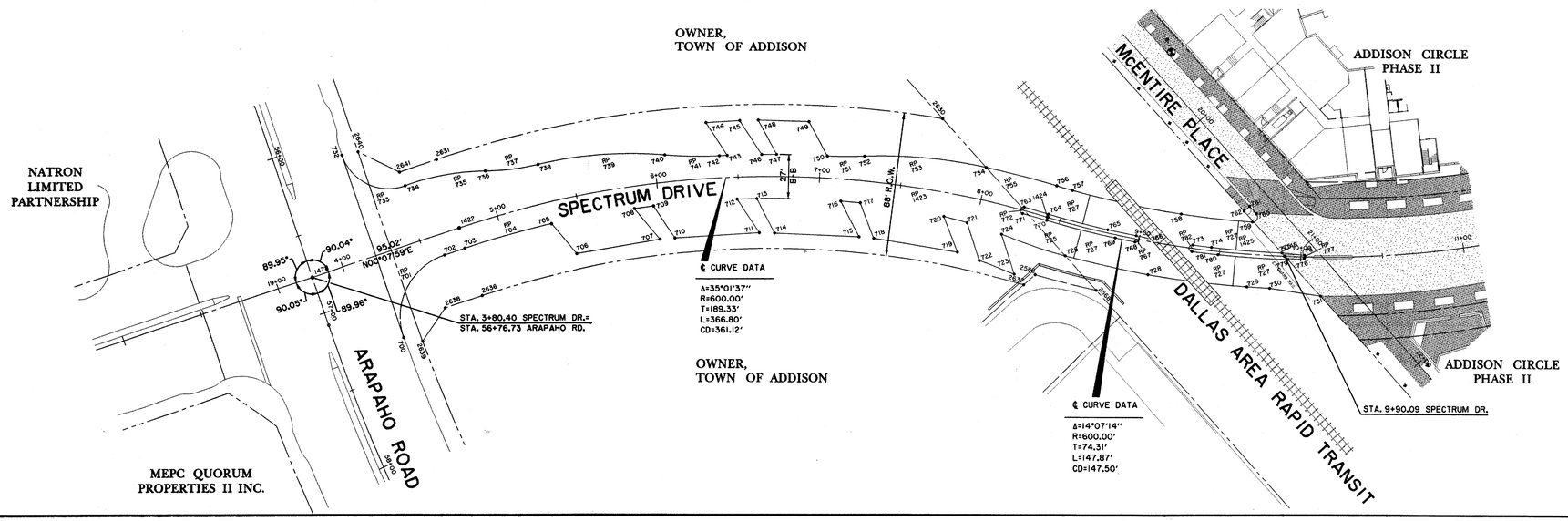

DATE	DESCRIPTION	REF NO.
1/05/04	ISSUED FOR CONSTRUCTION	
11/07/03	ISSUED FOR BID	

HORIZONTAL CONTROL PLAN

SPECTRUM DRIVE EXTENSION

TOWN OF ADDISON, TEXAS

Huitt - Zollars, Inc.
3131 Mckinney Ave., Suite 600, Dallas, TX 75204
Phone (214) 871-3311/Fax (214) 871-0757

DESIGN	DRAWN	APPR.	SCALE	DATE	PROJECT NO.	NO.
HZI	HZI	DEM	1"=40'	NOV 2003	01-3220-01	2

h:\proj\0132201\dgn\322001HC01.DGN

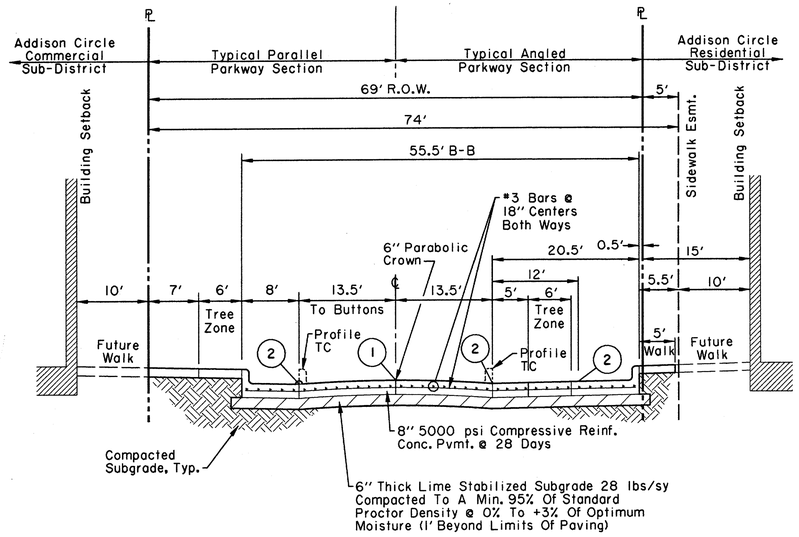

2 LANES UNDIVIDED
SPECTRUM DRIVE (NORTH EXTENSION)

(LOOKING SOUTH)

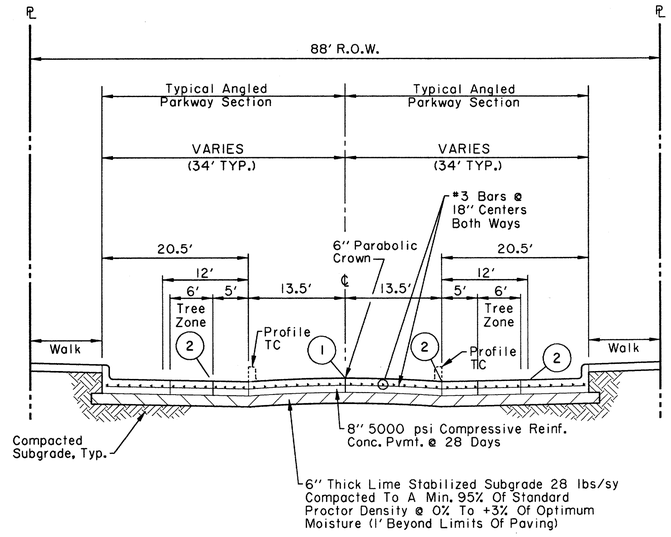

2 LANES UNDIVIDED
SPECTRUM DRIVE (SOUTH EXTENSION)

(LOOKING SOUTH)

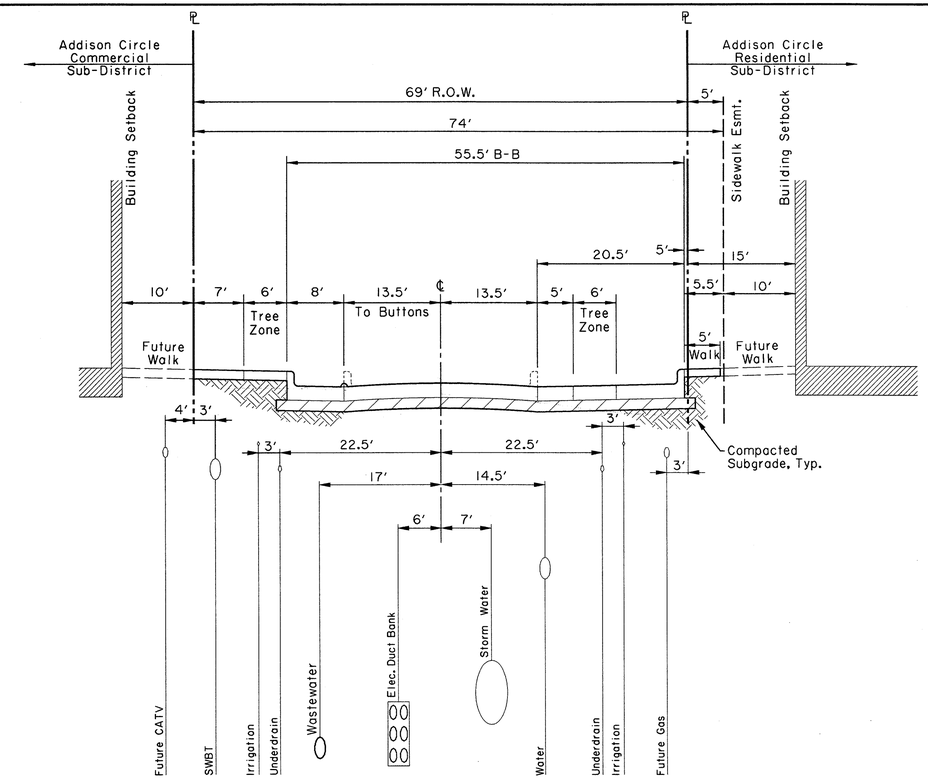

SPECTRUM DRIVE (NORTH EXTENSION)

(LOOKING SOUTH)

1. SAWED LONGITUDINAL DUMMY JOINT (SEE SHEET 8 FOR TYPICAL SPACING)
2. CONSTRUCTION JOINT (SEE SHEET 8 FOR TYPICAL SPACING)
3. EXPANSION JOINT (SEE PAVING PLANS FOR LOCATION)
4. LONGITUDINAL BUTT JOINT (SEE PAVING PLANS FOR LOCATION)

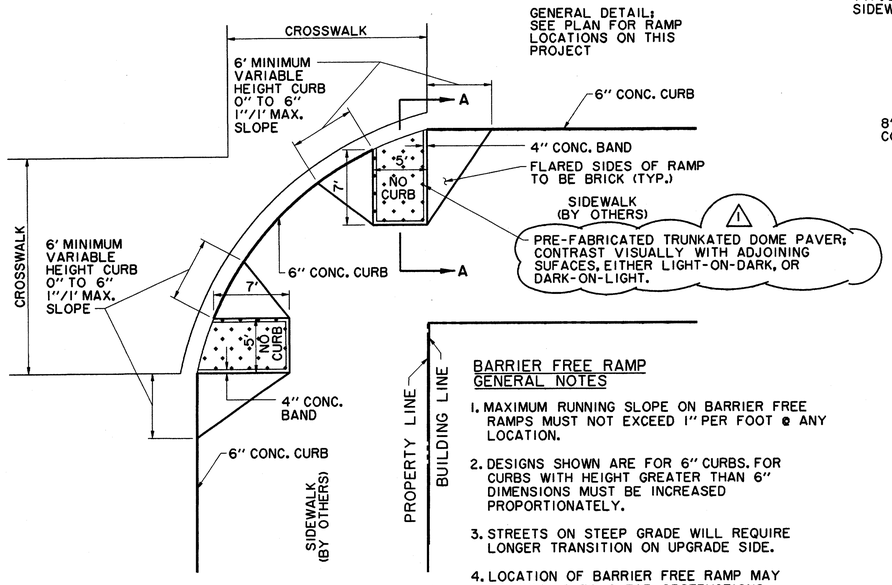

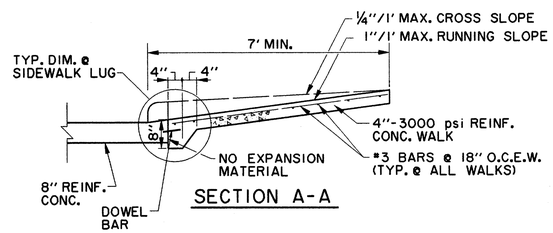

SECTION A-A

BARRIER FREE RAMP DETAIL AT INTERSECTING STREET

BARRIER FREE RAMP GENERAL NOTES

1. MAXIMUM RUNNING SLOPE ON BARRIER FREE RAMPS MUST NOT EXCEED 1" PER FOOT @ ANY LOCATION.
2. DESIGNS SHOWN ARE FOR 6" CURBS. FOR CURBS WITH HEIGHT GREATER THAN 6" DIMENSIONS MUST BE INCREASED PROPORTIONATELY.
3. STREETS ON STEEP GRADE WILL REQUIRE LONGER TRANSITION ON UPGRADE SIDE.
4. LOCATION OF BARRIER FREE RAMP MAY BE SHIFTED TO CLEAR OBSTRUCTIONS.
5. CONC. TO HAVE MINIMUM 3000 psi COMPRESSIVE STRENGTH @ 28 DAYS.
6. REINFORCEMENT TO BE #3 DEFORMED BARS @ 18" O.C.E.W. & SUPPORTED BY APPROVED BAR CHAIRS ON 3'-0" CENTERS.

NOTES:

1. BACKFILL MATERIAL IS NOT A SEPARATE PAY ITEM. MATERIAL ACQUIRED FROM EXCAVATION MAY BE USED IF APPROVED BY ENGINEER.
2. PAY LINE FOR UNCLASSIFIED STREET EXCAVATION IS TO THE TOE OF SLOPE IN FILL SECTIONS & TOP OF SLOPE IN CUT SECTIONS.
3. SAWED DUMMY JOINTS SHALL BE @ 12'-15' INTERVALS.
4. PROFILE GRADES SHOWN ON THE PAVING PLAN & PROFILE SHEETS ARE TOP OF CURB @ BACK OF CURB FOR A NORMAL ROADWAY CROSS-SECTION AS INDICATED ON THE TYPICAL SECTIONS BY "PROFILE T.C.".
5. CROSS SLOPES ON SIDEWALKS SHALL NOT EXCEED A 2% GRADE AND LONGITUDINAL SLOPES SHALL NOT EXCEED A 5% GRADE EXCEPT WHERE STREET GRADES REQUIRE A STEEPER GRADE. SLOPES IN EXCESS OF THE ABOVE NOTED MAXIMUMS WILL BE SUBJECT TO REMOVAL AND REPLACEMENT AS DIRECTED BY THE ACCESSIBILITY REVIEWER.
6. ALL GRASSED AREAS SHALL BE WATERED UNTIL WELL ESTABLISHED. USE TEMPORARY IRRIGATION SYSTEM.
7. ALL SWEEPNG SHALL BE VACUUM TYPE.

STATE OF TEXAS
DAVID E. MEYERS
81512
REGISTERED PROFESSIONAL ENGINEER
David E. Meyers
1/5/04

DATE	DESCRIPTION	REF NO.
1/05/04	ISSUED FOR CONSTRUCTION	
11/20/03	ADDENDUM NO. 1	1
11/07/03	ISSUED FOR BID	

TYPICAL SECTIONS

SPECTRUM DRIVE EXTENSION

TOWN OF ADDISON, TEXAS

Huitt - Zollars, Inc.
3131 Mckinney Ave., Suite 600, Dallas, TX 75204
Phone (214) 871-3311/Fax (214) 871-0757

DESIGN	DRAWN	APPR.	SCALE	DATE	PROJECT NO.	NO.
HZI	HZI	DEM	N.T.S.	NOV 2003	01-3220-01	3

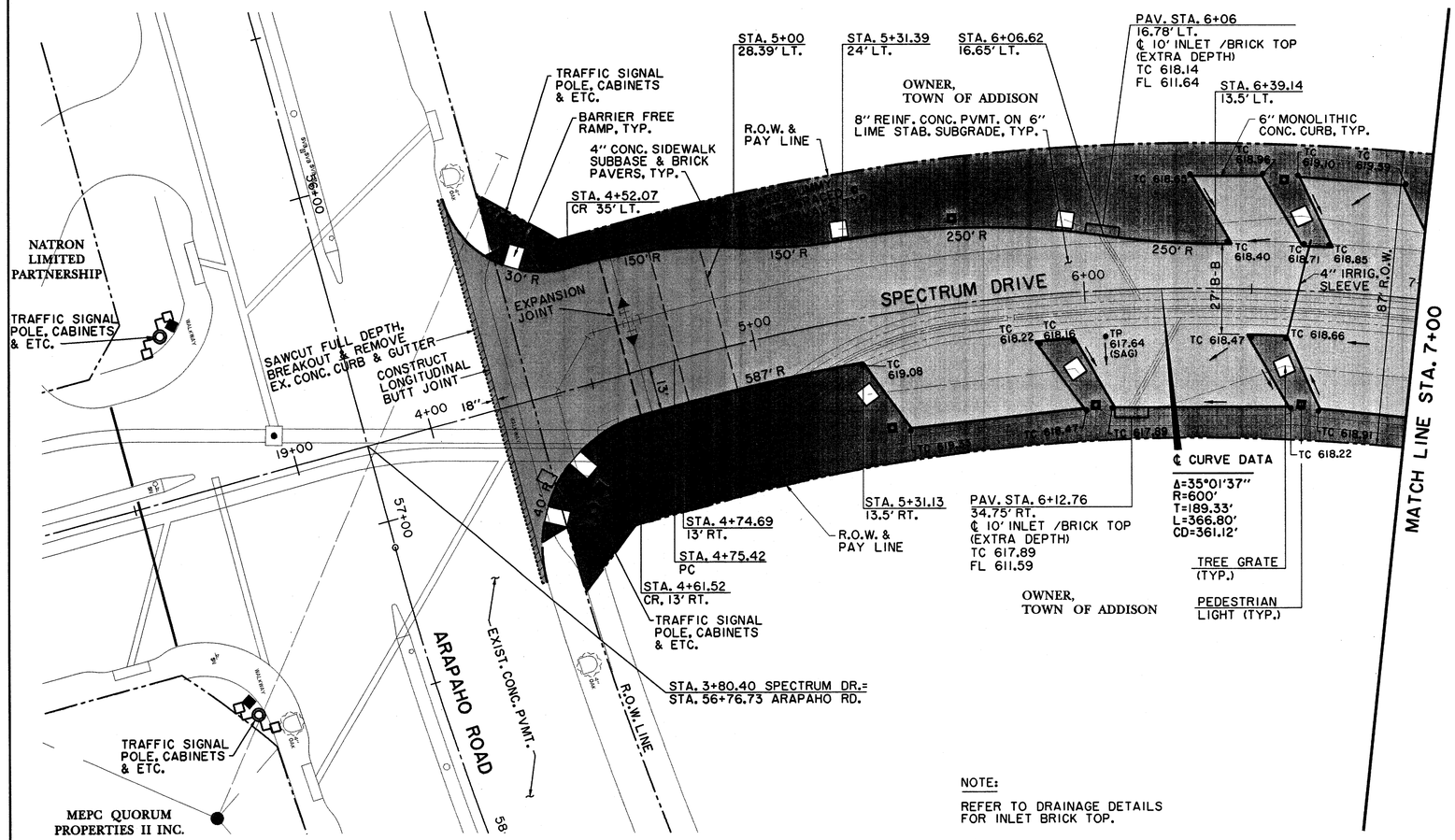

NOTE:

REFER TO DRAINAGE DETAILS FOR INLET BRICK TOP.

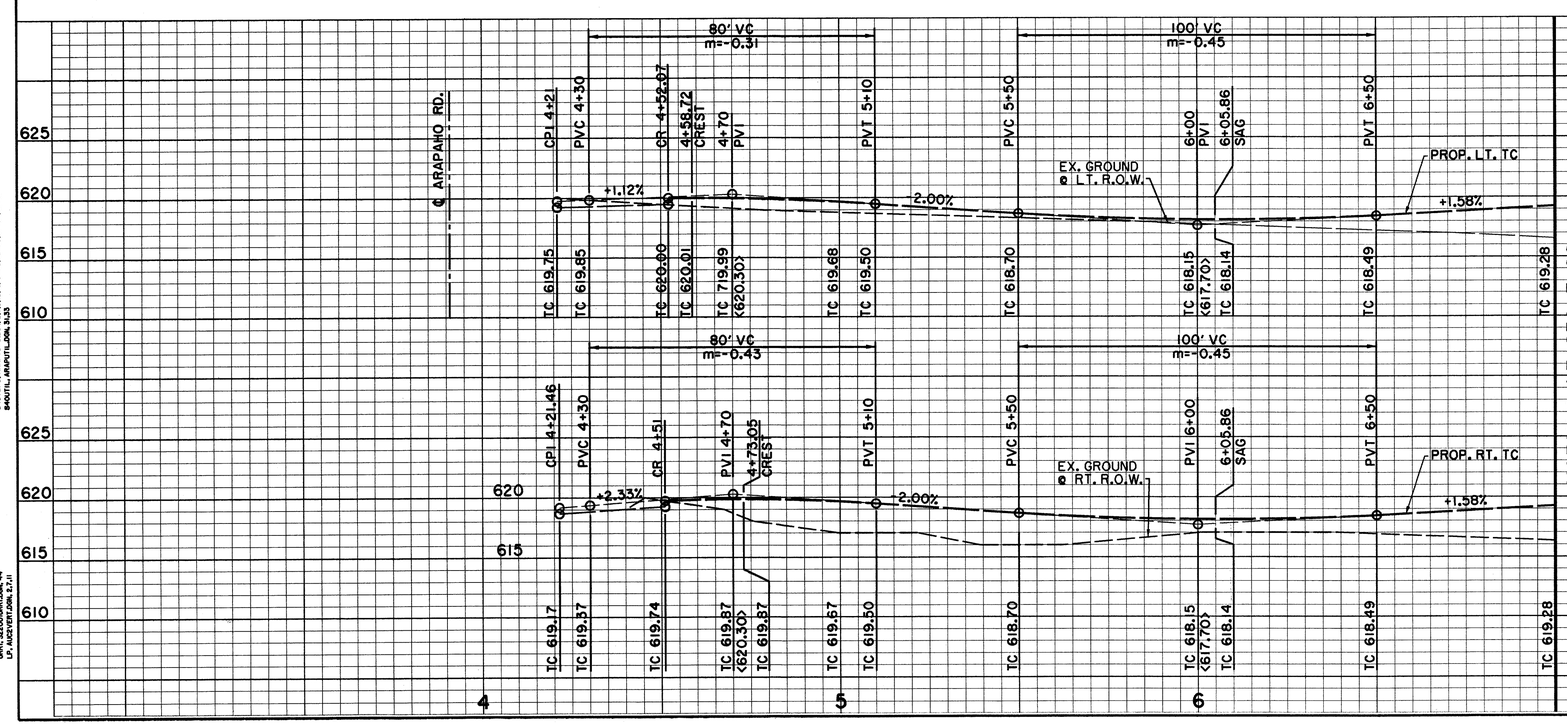

BENCHMARKS:

"□" CUT SOUTHWEST CORNER OF CURB INLET, WEST SIDE OF SPECTRUM DRIVE, ±30' NORTH OF MORRIS AVENUE.
ELEV. 611.84

"X" CUT ON CONC. TOP OF CURB OF MEDIAN NOSE ON SPECTRUM DRIVE AT INTERSECTION OF McENTIRE PLACE.
ELEV. 619.30

STATE OF TEXAS
DAVID E. MEYERS
81512
REGISTERED PROFESSIONAL ENGINEER
1/5/04

DATE	DESCRIPTION	REF NO.
1/05/04	ISSUED FOR CONSTRUCTION	
11/07/03	ISSUED FOR BID	

PAVING PLAN & PROFILE
SPECTRUM DRIVE STA. 3+00 TO STA. 7+00

SPECTRUM DRIVE EXTENSION

TOWN OF ADDISON, TEXAS

Huitt - Zollars, Inc.
3131 McKinney Ave., Suite 600, Dallas, TX 75204
Phone (214) 871-3311/Fax (214) 871-0757

DESIGN	DRAWN	APPR.	SCALE	DATE	PROJECT NO.	NO.
HZI	HZI	DEM	H: 1"=20' V: 1"=6'	NOV 2003	01-3220-01	4

h:\proj\01322001\dgn\32200ICS01.DGN

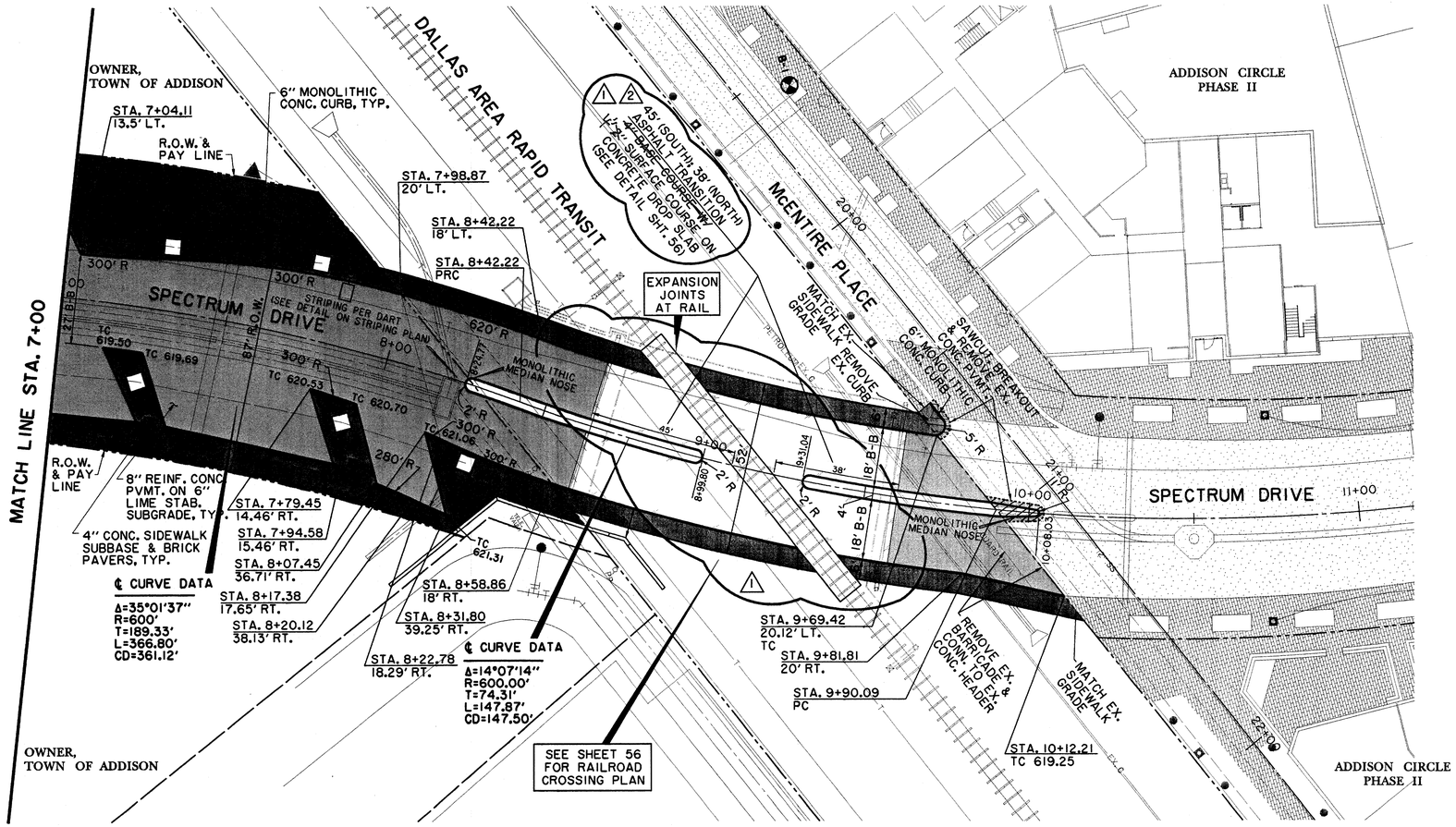

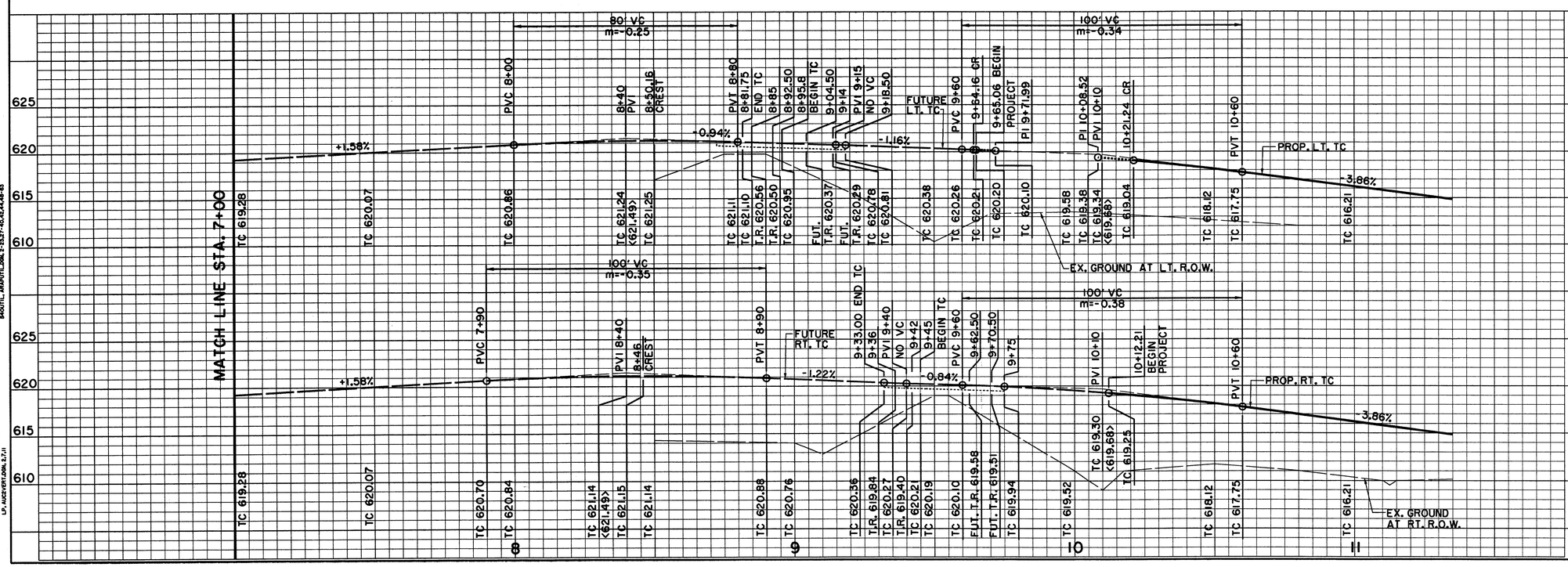

BENCHMARKS:

"□" CUT SOUTHWEST CORNER OF CURB INLET, WEST SIDE OF SPECTRUM DRIVE, ±30' NORTH OF MORRIS AVENUE.
ELEV. 611.84

"X" CUT ON CONC. TOP OF CURB OF MEDIAN NOSE ON SPECTRUM DRIVE AT INTERSECTION OF McENTIRE PLACE.
ELEV. 619.30

STATE OF TEXAS — DAVID E. MEYERS 81512 — REGISTERED PROFESSIONAL ENGINEER — 1/5/04

DATE	DESCRIPTION	REF NO.
1/05/04	ISSUED FOR CONSTRUCTION	
12/16/03	REVISED ASPHALT TRANSITION LIMITS	2
11/20/03	ADDENDUM NO. 1	1
11/07/03	ISSUED FOR BID	

PAVING PLAN & PROFILE
SPECTRUM DRIVE STA. 7+00 TO STA. 11+00

SPECTRUM DRIVE EXTENSION

TOWN OF ADDISON, TEXAS

Huitt - Zollars, Inc.
3131 McKinney Ave., Suite 600, Dallas, TX 75204
Phone (214) 871-3311/Fax (214) 871-0757

DESIGN	DRAWN	APPR.	SCALE	DATE	PROJECT NO.	NO.
HZI	HZI	DEM	H: 1"=20' V: 1"=6'	NOV 2003	01-3220-01	5

h:\proj\01322001\dgn\32200ICS02.DGN

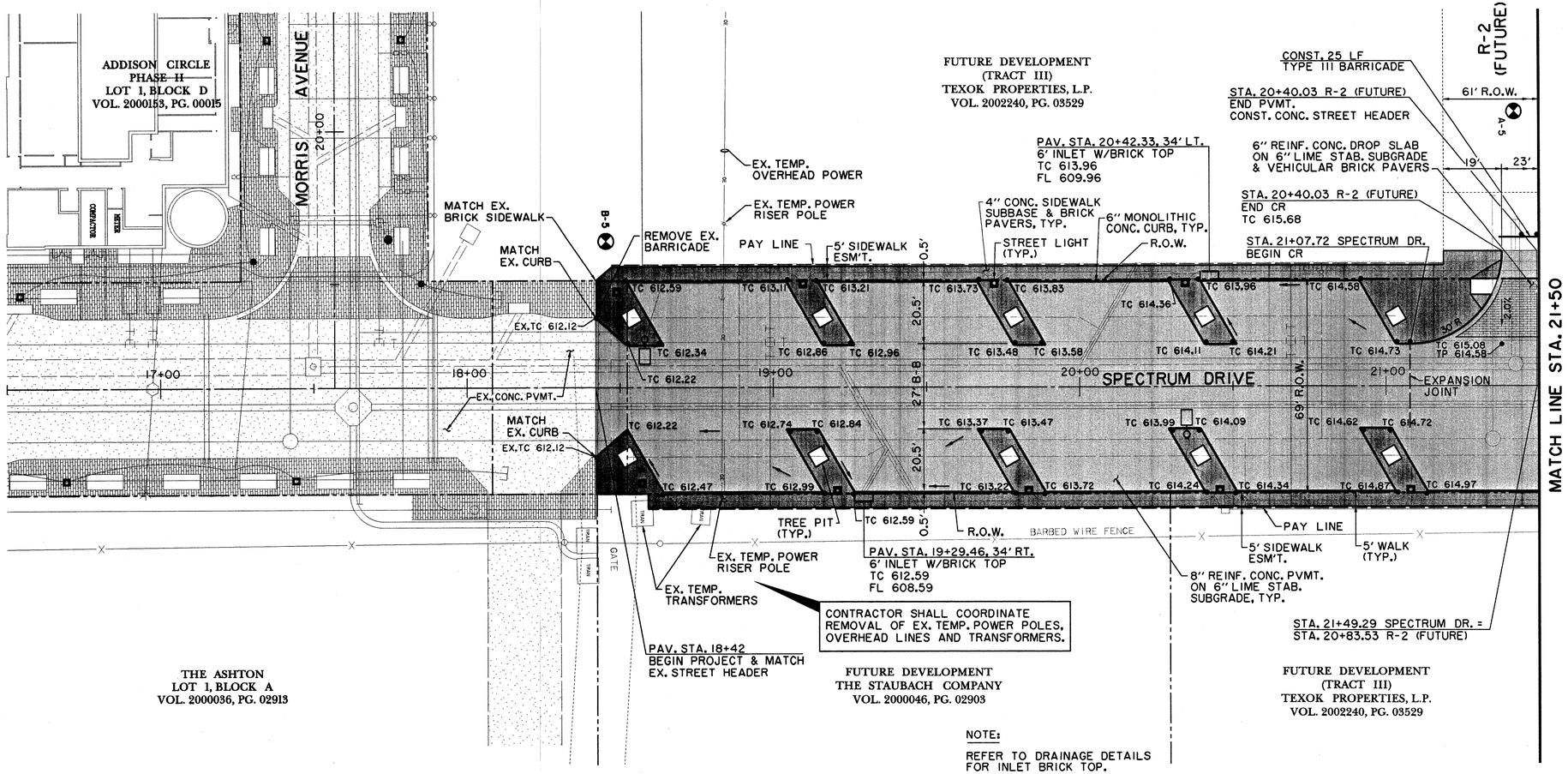

NOTE:

REFER TO DRAINAGE DETAILS FOR INLET BRICK TOP.

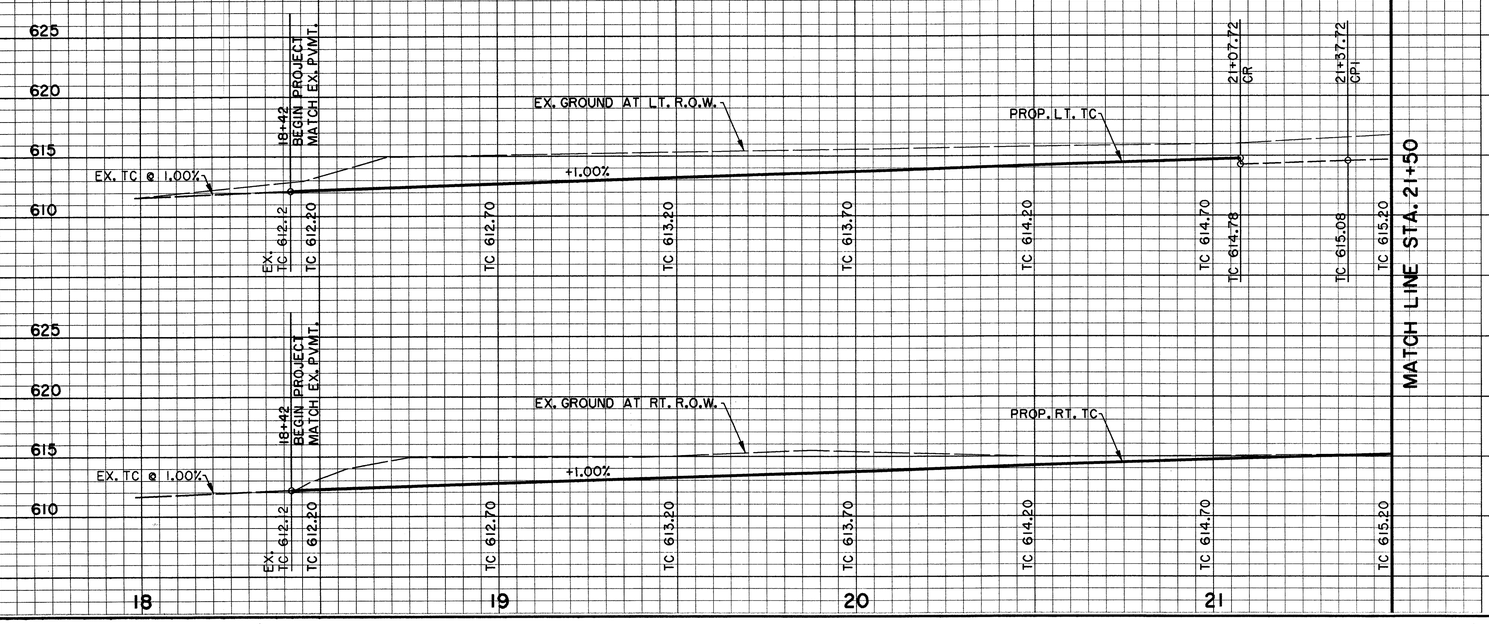

BENCHMARKS:

"□" CUT SOUTHWEST CORNER OF CURB INLET, WEST SIDE OF SPECTRUM DRIVE, ±30' NORTH OF MORRIS AVENUE. ELEV. 611.84

"□" CUT ON TOP EAST END OF CURB INLET ON NORTH SIDE OF MORRIS AVENUE AND ±150' EAST OF QUORUM DRIVE CENTERLINE. ELEV. 616.39

STATE OF TEXAS
DAVID E. MEYERS
81512
REGISTERED PROFESSIONAL ENGINEER
1/5/04

DATE	DESCRIPTION	REF NO.
1/05/04	ISSUED FOR CONSTRUCTION	
11/07/03	ISSUED FOR BID	

PAVING PLAN & PROFILE
SPECTRUM DRIVE STA. 18+42 TO STA. 21+50
SPECTRUM DRIVE EXTENSION

TOWN OF ADDISON, TEXAS

Huitt - Zollars, Inc.
3131 Mckinney Ave., Suite 600, Dallas, TX 75204
Phone (214) 871-3311/Fax (214) 871-0757

DESIGN	DRAWN	APPR.	SCALE	DATE	PROJECT NO.	NO.
HZI	HZI	DEM	H: 1"=20' V: 1"=6'	NOV 2003	01-3220-01	6

h:\proj\01322001\dgn\32200ICS03.DGN

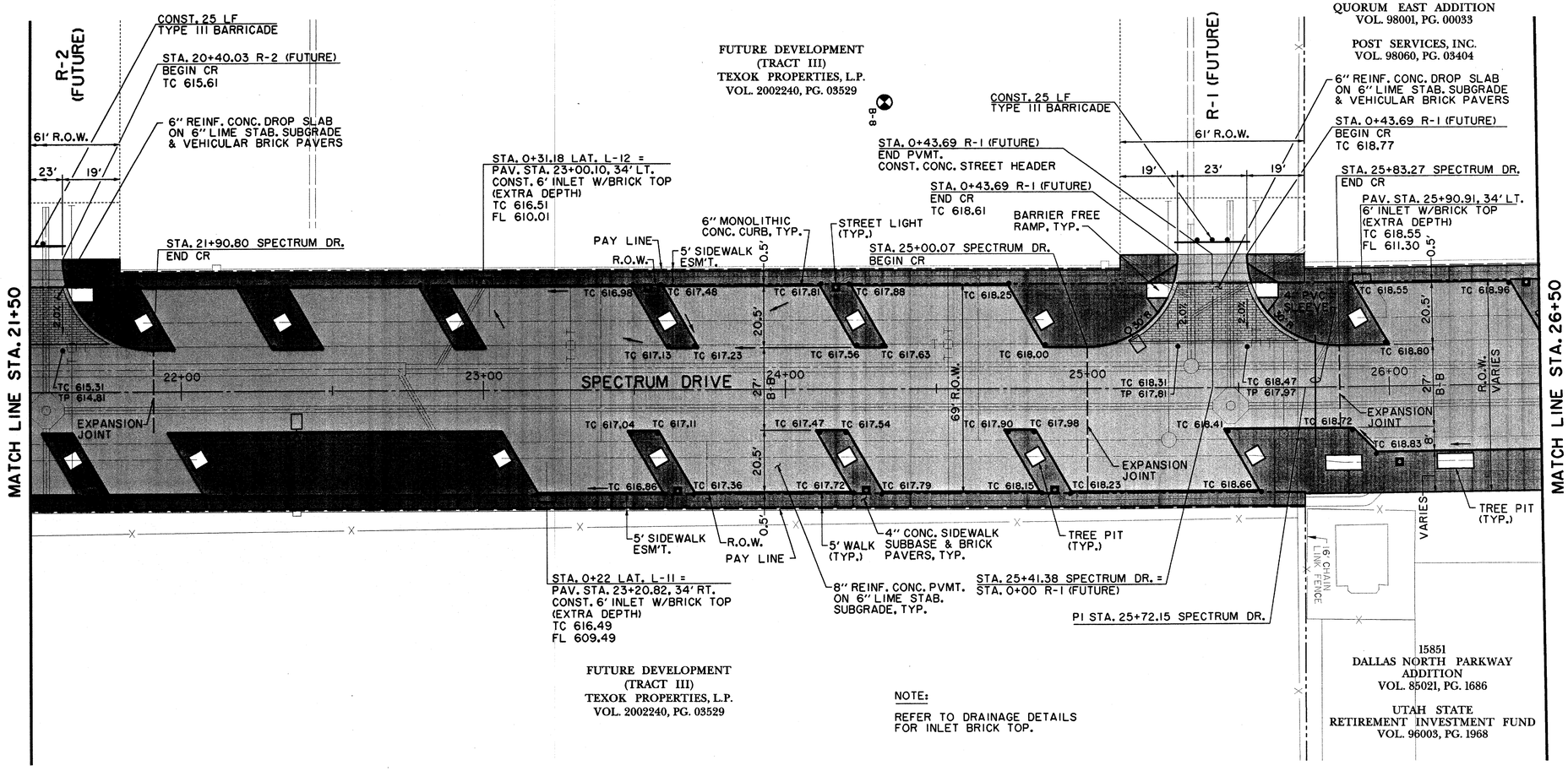

NOTE:

REFER TO DRAINAGE DETAILS FOR INLET BRICK TOP.

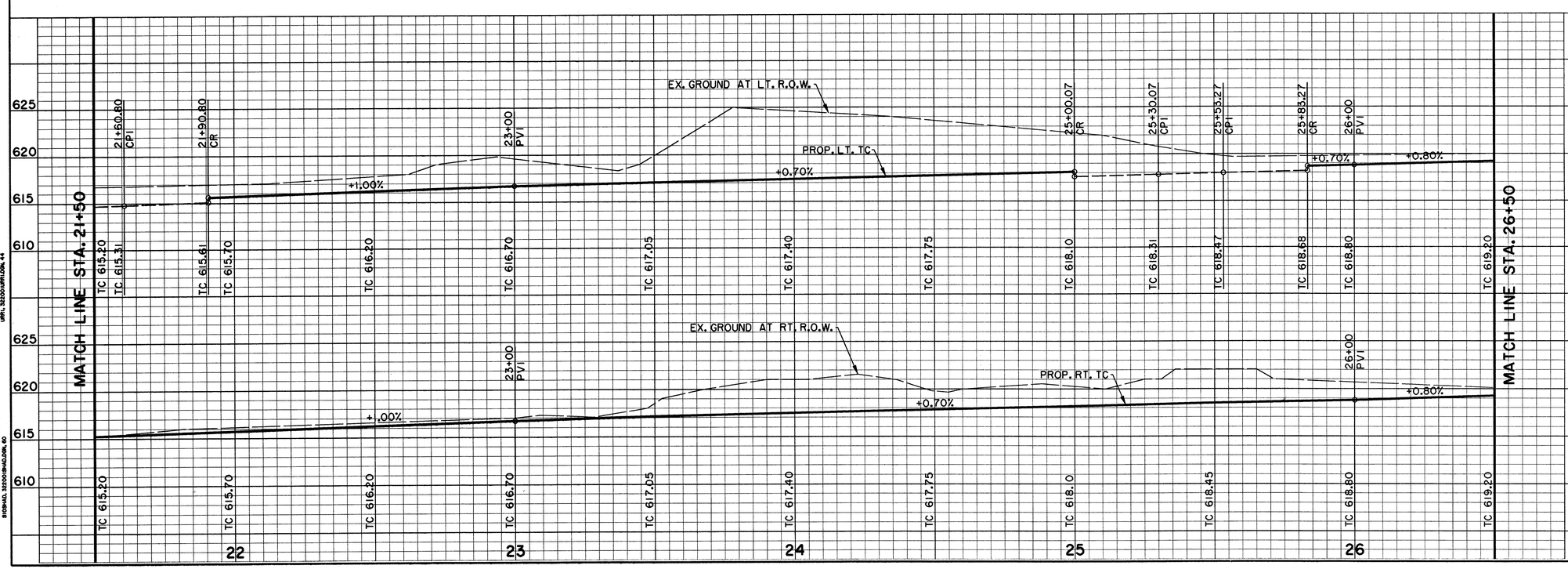

BENCHMARKS:

"□" CUT SOUTHWEST CORNER OF CURB INLET, WEST SIDE OF SPECTRUM DRIVE, ±30' NORTH OF MORRIS AVENUE. ELEV. 611.84

"□" CUT ON TOP EAST END OF CURB INLET ON NORTH SIDE OF MORRIS AVENUE AND ±150' EAST OF QUORUM DRIVE CENTERLINE. ELEV. 616.39

STATE OF TEXAS — DAVID E. MEYERS 81512 — REGISTERED PROFESSIONAL ENGINEER — 1/5/04

DATE	DESCRIPTION	REF NO.
1/05/04	ISSUED FOR CONSTRUCTION	
11/07/03	ISSUED FOR BID	

PAVING PLAN & PROFILE
SPECTRUM DRIVE STA. 21+50 TO STA. 26+50
SPECTRUM DRIVE EXTENSION
TOWN OF ADDISON, TEXAS

Huitt - Zollars, Inc.
3131 Mckinney Ave., Suite 600, Dallas, TX 75204
Phone (214) 871-3311 Fax (214) 871-0757

DESIGN	DRAWN	APPR.	SCALE	DATE	PROJECT NO.	NO.
HZI	HZI	DEM	H: 1"=20' V: 1"=6'	NOV 2003	01-3220-01	7

h:\proj\0132200\1\dgn\32200ICS04.DGN

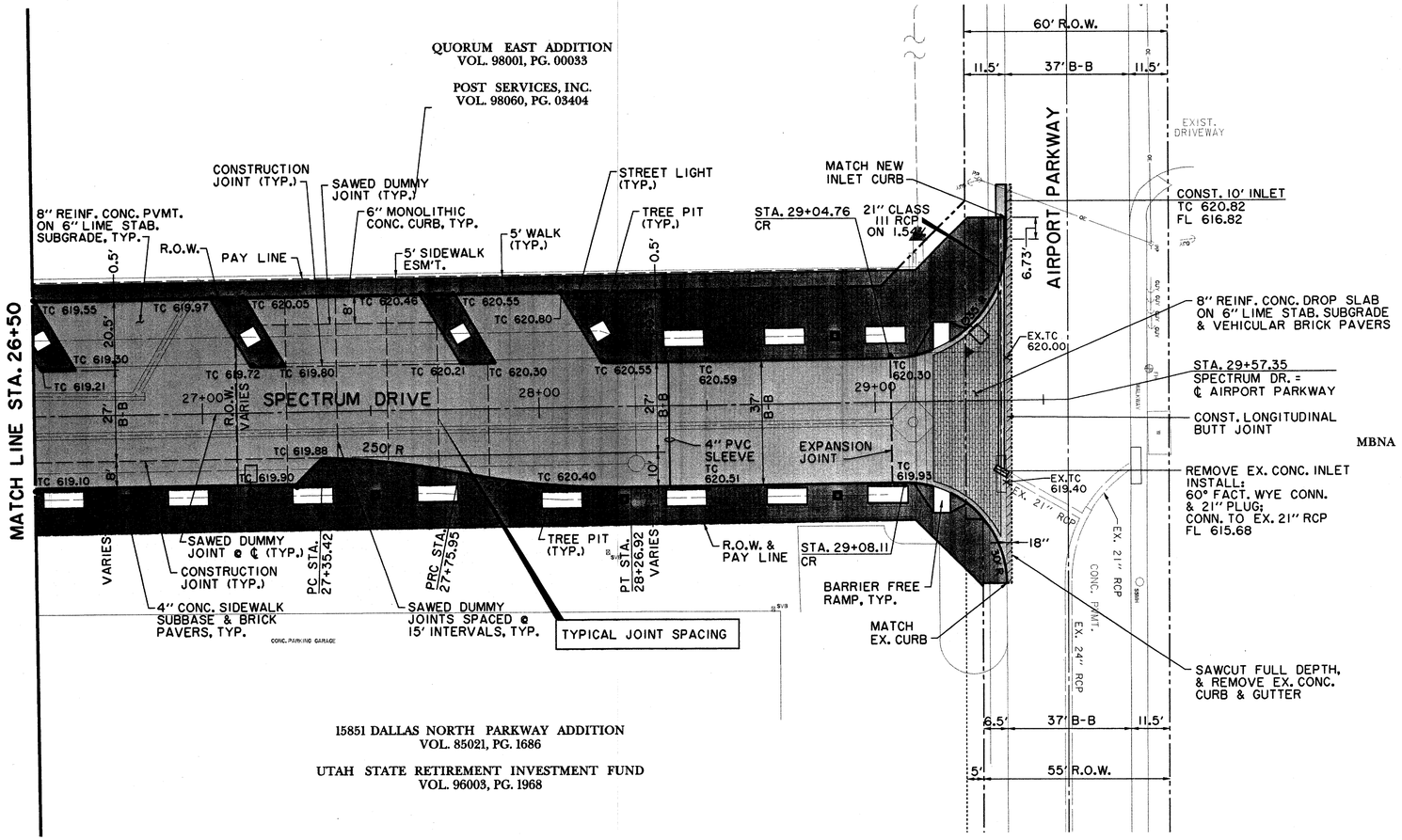

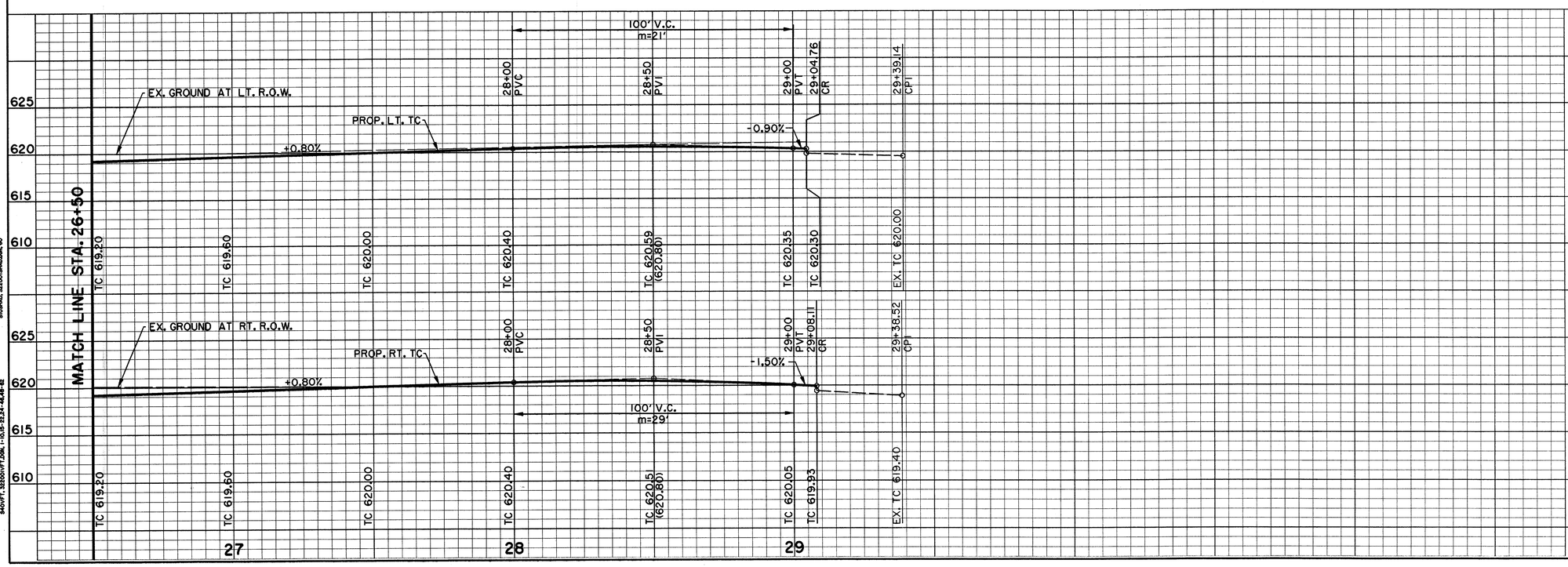

BENCHMARKS:

"□" CUT SOUTHWEST CORNER OF CURB INLET, WEST SIDE OF SPECTRUM DRIVE, ±30' NORTH OF MORRIS AVENUE. ELEV. 611.84

"□" CUT ON TOP EAST END OF CURB INLET ON NORTH SIDE OF MORRIS AVENUE AND ±150' EAST OF QUORUM DRIVE CENTERLINE. ELEV. 616.39

STATE OF TEXAS
DAVID E. MEYERS
81512
REGISTERED PROFESSIONAL ENGINEER
11/5/04

DATE	DESCRIPTION	REF NO.
1/05/04	ISSUED FOR CONSTRUCTION	
11/07/03	ISSUED FOR BID	

PAVING PLAN & PROFILE

SPECTRUM DRIVE STA. 26+50 TO STA. 29+57.35

SPECTRUM DRIVE EXTENSION

TOWN OF ADDISON, TEXAS

Huitt - Zollars, Inc.
3131 Mckinney Ave., Suite 600, Dallas, TX 75204
Phone (214) 871-3311/Fax (214) 871-0757

DESIGN	DRAWN	APPR.	SCALE	DATE	PROJECT NO.	NO.
HZI	HZI	DEM	H: 1"=20' V: 1"=6'	NOV 2003	01-3220-01	8

h:\proj\0132201\dgn\32201CS05.DGN

NOTES-PAVING AND GRADING

1. UNLESS SPECIFICALLY STATED OTHERWISE IN PLANS OR CONTRACT DOCUMENTS, THE CONTROLLING SPECIFICATIONS FOR ALL WORK WITHIN PUBLIC RIGHTS-OF-WAY AND EASEMENTS SHALL BE THE STANDARD SPECIFICATIONS FOR PUBLIC WORKS CONSTRUCTION, THIRD EDITION 1998, AS AMENDED BY THE NORTH CENTRAL TEXAS COUNCIL OF GOVERNMENTS ("STANDARD SPECIFICATIONS"). COPIES OF THE STANDARD SPECIFICATIONS MAY BE PURCHASED BY MAIL OR OVER THE COUNTER FROM THE NORTH CENTRAL TEXAS COUNCIL OF GOVERNMENTS, 616 SIX FLAGS DRIVE, P.O. BOX DRAWER COG, ARLINGTON, TEXAS 76005-5888, PHONE METRO 817/640-3300. BULK DISCOUNTS ARE AVAILABLE. THIS DOCUMENT IS COPYRIGHTED.
2. THE PAVING AREAS WILL BE GRADED TO +/- .10' OF FINISHED SUBGRADE ELEVATIONS. SIDEWALK AREAS WILL BE GRADED TO +/- .10' OF FINISHED PAVEMENT ELEVATION.
3. ALL TRAFFIC CONTROL NECESSARY FOR THE WORK SHALL BE PROVIDED BY THE SUCCESSFUL CONTRACTOR. ALL BARRICADES, WARNING SIGNS, LIGHTS, DEVICES, ETC. FOR THE GUIDANCE AND PROTECTION OF TRAFFIC AND PEDESTRIANS MUST CONFORM TO THE INSTALLATIONS SHOWN IN THE LATEST ISSUE OF THE "TEXAS MANUAL ON UNIFORM TRAFFIC CONTROL DEVICES FOR STREETS AND HIGHWAYS (MUTCD)", AS CURRENTLY AMENDED, TEXAS DEPARTMENT OF TRANSPORTATION.
4. ALL FILL SHALL BE PLACED IN MAXIMUM 8-INCH LIFTS COMPACTED TO 95% OF STANDARD PROCTOR DENSITY BETWEEN 0% AND +3% OF OPTIMUM MOISTURE CONTENT.
5. ALL TREES, STUMPS, BRUSH, GRASSES AND SURFACE ORGANICS WITHIN PROPOSED RIGHT-OF-WAY ARE TO REMOVED AND PROPERLY DISPOSED OF OFF-SITE. TREE REMOVAL PERMITS, IF REQUIRED, WILL BE OBTAINED BY THE OWNER.
6. EXISTING UTILITY POLES, IF ANY, WILL BE REMOVED OR RELOCATED BY THE UTILITY COMPANIES THROUGH COORDINATION BY THE OWNER. CONTRACTOR SHALL BRING TO THE OWNER'S ATTENTION ANY FACILITIES THAT APPEAR TO BE IN CONFLICT SO THAT THE OWNER HAS SUFFICIENT TIME TO ACCOMPLISH THE NECESSARY RELOCATIONS.
7. WHERE DEEP VERTICAL EXCAVATIONS (IN EXCESS OF 3 FEET) ARE INDICATED, CUTS SHALL BE LAID BACK AT A STABLE SLOPE (ON OWNER'S PROPERTY). BACKFILL MATERIAL SHALL BE STOCKPILED ON-SITE AT THE DIRECTION OF THE OWNER.
8. ALL REINFORCING STEEL AND DOWEL BARS IN PAVEMENT SHALL BE SUPPORTED AND MAINTAINED AT THE CORRECT CLEARANCES BY THE USE OF BAR CHAIRS OR OTHER APPROVED SUPPORT. INSERTION OF RE-BAR INTO "GREEN" CONCRETE IS PROHIBITED.
9. THE USE OF WOOD FORMS FOR PAVEMENT CONSTRUCTION WILL BE PERMITTED.
10. BARRIER-FREE RAMPS WILL BE BUILT ON THIS PROJECT. LOCATIONS MAY BE ADJUSTED AS DIRECTED BY THE ENGINEER TO CLEAR OBSTRUCTIONS.
11. VARIABLE HEIGHT CURB AT INTERSECTIONS AND SLOPING CURBS AT DRIVES SHALL BE BUILT TO MATCH BARRIER-FREE RAMPS PER PLANS. NO SEPARATE PAY ITEMS ARE APPROVED.
12. TWO-WAY TRAFFIC MUST BE MAINTAINED AT ALL TIMES ON EXISTING PUBLIC STREETS ADJACENT TO THIS PROJECT UNLESS SPECIFIED OTHERWISE IN THE PLANS AND SPECIFICATIONS. THE TRAVELWAY WIDTH SHALL NOT BE LESS THAN 11 FEET.
13. SEE TYPICAL SECTIONS SHEET FOR ADDITIONAL MATERIAL SPECIFICATIONS.
14. ALL CURBS SHALL BE PLACED INTEGRAL WITH PAVEMENT.
15. CURBS SHALL MEET THE SAME COMPRESSIVE STRENGTH AS SPECIFIED FOR THE CONCRETE PAVEMENT.
16. BAR LAPS SHALL BE 30 DIAMETERS.
17. FINISH SHALL BE TRANSVERSE WITH TRAFFIC LANES AND SHALL BE STEEL TINED BROOM FINISH.
18. SEE SURFACE PATTERNING PLANS FOR BRICK AND SIDEWALK PATTERNS. POUR SIDEWALK AROUND NOTED LEAVEOUTS PER LOCATIONS ON SURFACE PATTERNING PLANS.

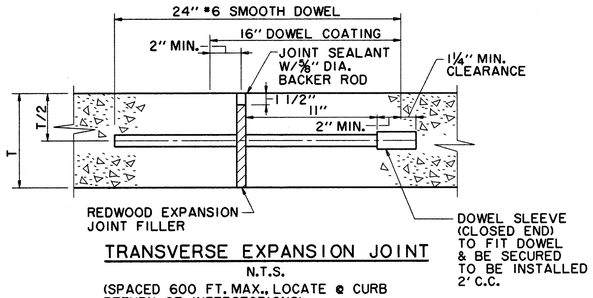

TRANSVERSE EXPANSION JOINT
N.T.S.

(SPACED 600 FT. MAX., LOCATE @ CURB RETURN OF INTERSECTIONS)
NOTE:
DOWELS & REINF. BARS SHALL BE SUPPORTED BY AN APPROVED DEVICE.

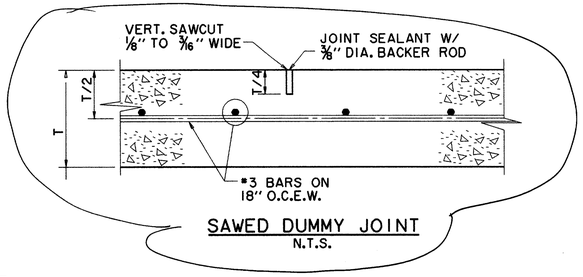

SAWED DUMMY JOINT
N.T.S.

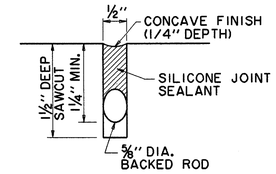

TYPICAL CONSTRUCTION JOINT DETAIL (8" PAVEMENT)
N.T.S.

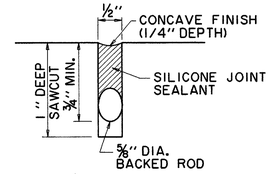

TYPICAL CONSTRUCTION JOINT DETAIL (6" PAVEMENT)
N.T.S.

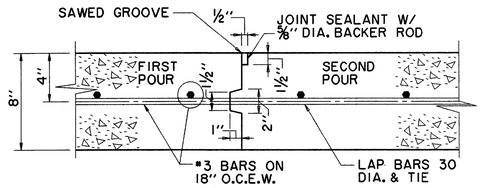

CONSTRUCTION JOINT FOR 8" PAVEMENT
N.T.S.

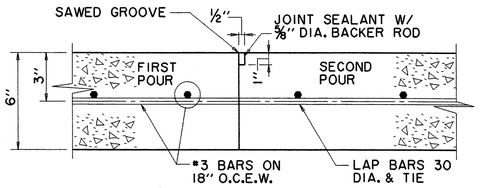

CONSTRUCTION JOINT FOR 6" PAVEMENT
N.T.S.

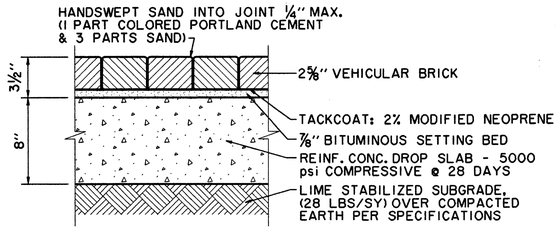

VEHICULAR BRICK INSTALLATION IN VEHICULAR AREAS
N.T.S.

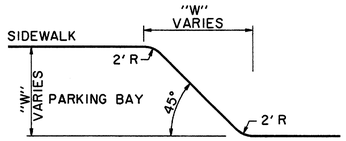

PARKING TRANSITION DETAIL
N.T.S.

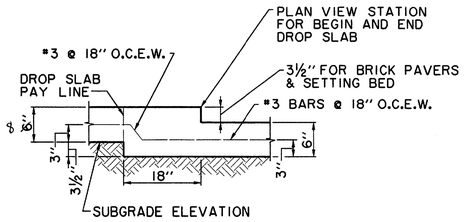

LONGITUDINAL SECTION AT DROP SLAB IN STREET
N.T.S.

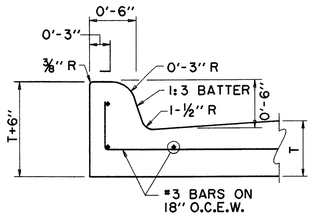

INTEGRAL CURB AND GUTTER
N.T.S.

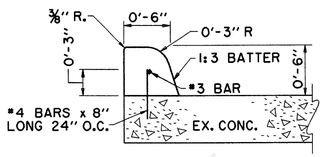

6 INCH DOWELLED ON CURB
N.T.S.

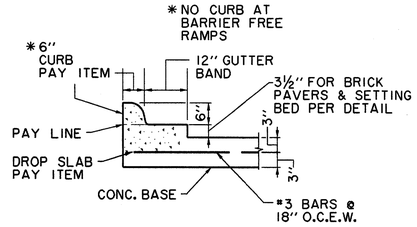

SECTION THRU CURB AT DROP SLAB
N.T.S.

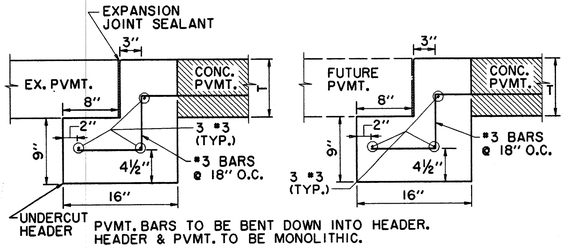

PVMT. BARS TO BE BENT DOWN INTO HEADER.
HEADER & PVMT. TO BE MONOLITHIC.

STREET HEADER
N.T.S.

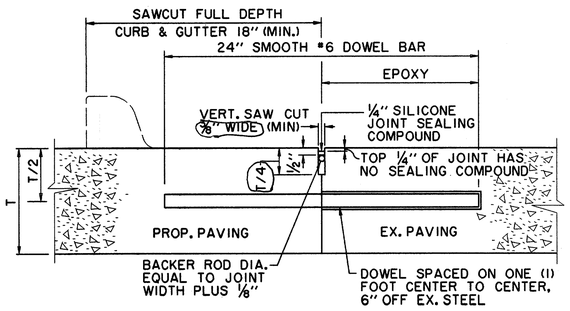

DOWEL BARS SHALL BE DRILLED INTO EX. PVMT. HORIZONTALLY BY USE OF A MECHANICAL RIG. DRILLING BY HAND IS NOT ACCEPTABLE. PUSHING DOWEL BARS INTO GREEN CONC. NOT ACCEPTABLE.

LONGITUDINAL BUTT JOINT
N.T.S.

STATE OF TEXAS
DAVID E. MEYERS
81512
REGISTERED PROFESSIONAL ENGINEER
1/5/04

DATE	DESCRIPTION	REF NO.
1/05/04	ISSUED FOR CONSTRUCTION	
11/07/03	ISSUED FOR BID	

PAVING DETAILS

SPECTRUM DRIVE EXTENSION

TOWN OF ADDISON, TEXAS

Huitt - Zollars, Inc.
3131 Mckinney Ave., Suite 600, Dallas, TX 75204
Phone (214) 871-3311/Fax (214) 871-0757

DESIGN	DRAWN	APPR.	SCALE	DATE	PROJECT NO.	NO.
HZI	HZI	DEM	N.T.S.	NOV 2003	01-3220-01	9

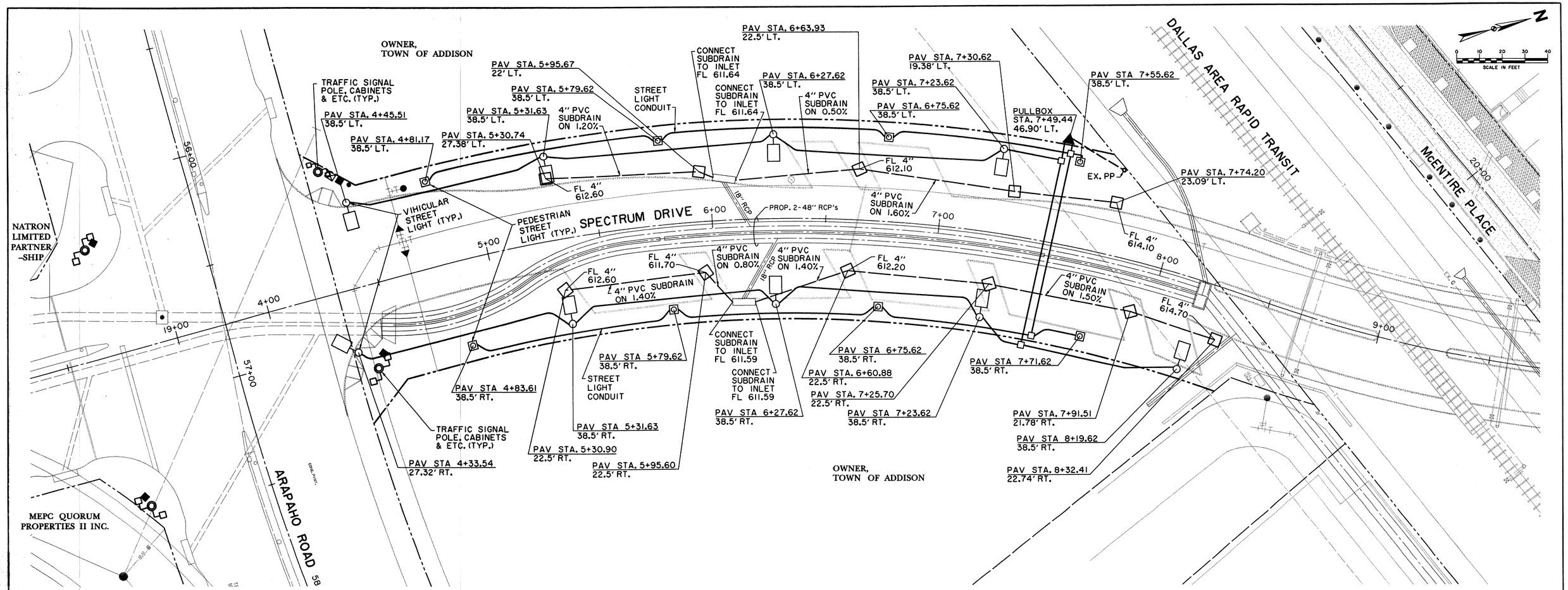

BENCHMARKS:

"□" CUT SOUTHWEST CORNER OF CURB INLET, WEST SIDE OF SPECTRUM DRIVE, ±30' NORTH OF MORRIS AVENUE.
ELEV. 611.84

"X" CUT ON CONC. TOP OF CURB OF MEDIAN NOSE ON SPECTRUM DRIVE AT INTERSECTION OF McENTIRE PLACE.
ELEV. 619.30

NOTE:

1. CENTER TO CENTER TREE DIMENSIONS ARE MEASURED ALONG THE CENTERLINE OF THE STREET.
2. CONDUIT ROUTINGS ARE SCHEMATIC. ROUTE ALL CONDUITS WITHIN THE RIGHT-OF-WAY AND SIDEWALK EASEMENTS ADJUSTING AS NECESSARY TO AVOID CONFLICTS WITH OTHER IMPROVEMENTS.

STATE OF TEXAS
DAVID E. MEYERS
81512
REGISTERED PROFESSIONAL ENGINEER
4/22/04

DATE	DESCRIPTION	REF NO.
4/22/04	DELETED 7 PEDESTRIAN POLES/FOUNDATIONS	2
3/04/04	REVISED ALL PEDESTRIAN & STREET LIGHTING	1
1/05/04	ISSUED FOR CONSTRUCTION	
11/07/03	ISSUED FOR BID	

STREETSCAPE PLAN

SPECTRUM DRIVE EXTENSION

TOWN OF ADDISON, TEXAS

Huitt - Zollars, Inc.
3131 Mckinney Ave., Suite 600, Dallas, TX 75204
Phone (214) 871-3311/Fax (214) 871-0757

DESIGN	DRAWN	APPR.	SCALE	DATE	PROJECT NO.	NO.
HZI	HZI	DEM	1"=20'	NOV 2003	01-3220-01	10

h:\proj\01322001\dgn\322001LS01.DGN

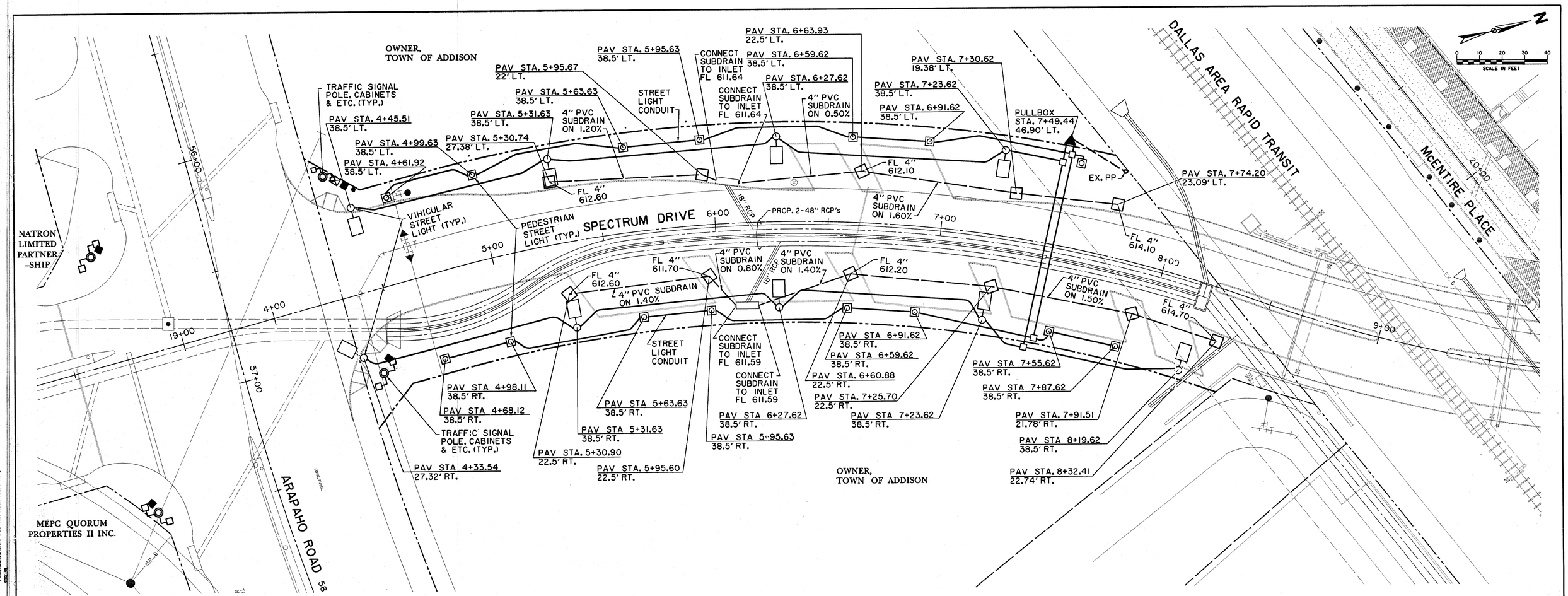

BENCHMARKS:

"□" CUT SOUTHWEST CORNER OF CURB INLET, WEST SIDE OF SPECTRUM DRIVE, ±30' NORTH OF MORRIS AVENUE.
ELEV. 611.84

"X" CUT ON CONC. TOP OF CURB OF MEDIAN NOSE ON SPECTRUM DRIVE AT INTERSECTION OF McENTIRE PLACE.
ELEV. 619.30

NOTE:

1. CENTER TO CENTER TREE DIMENSIONS ARE MEASURED ALONG THE CENTERLINE OF THE STREET.
2. CONDUIT ROUTINGS ARE SCHEMATIC. ROUTE ALL CONDUITS WITHIN THE RIGHT-OF-WAY AND SIDEWALK EASEMENTS ADJUSTING AS NECESSARY TO AVOID CONFLICTS WITH OTHER IMPROVEMENTS.

STATE OF TEXAS
DAVID E. MEYERS
81512
REGISTERED PROFESSIONAL ENGINEER
3/4/04

DATE	DESCRIPTION	REF NO.
3/04/04	REVISED ALL PEDESTRIAN & STREET LIGHTING	1
1/05/04	ISSUED FOR CONSTRUCTION	
11/07/03	ISSUED FOR BID	

STREETSCAPE PLAN

SPECTRUM DRIVE EXTENSION

TOWN OF ADDISON, TEXAS

Huitt - Zollars, Inc.
3131 Mckinney Ave., Suite 600, Dallas, TX 75204
Phone (214) 871-3311/Fax (214) 871-0757

DESIGN	DRAWN	APPR.	SCALE	DATE	PROJECT NO.	NO.
HZI	HZI	DEM	1"=20'	NOV 2003	01-3220-01	10

h:\proj\01322001\dgn\32200ILS01.DGN

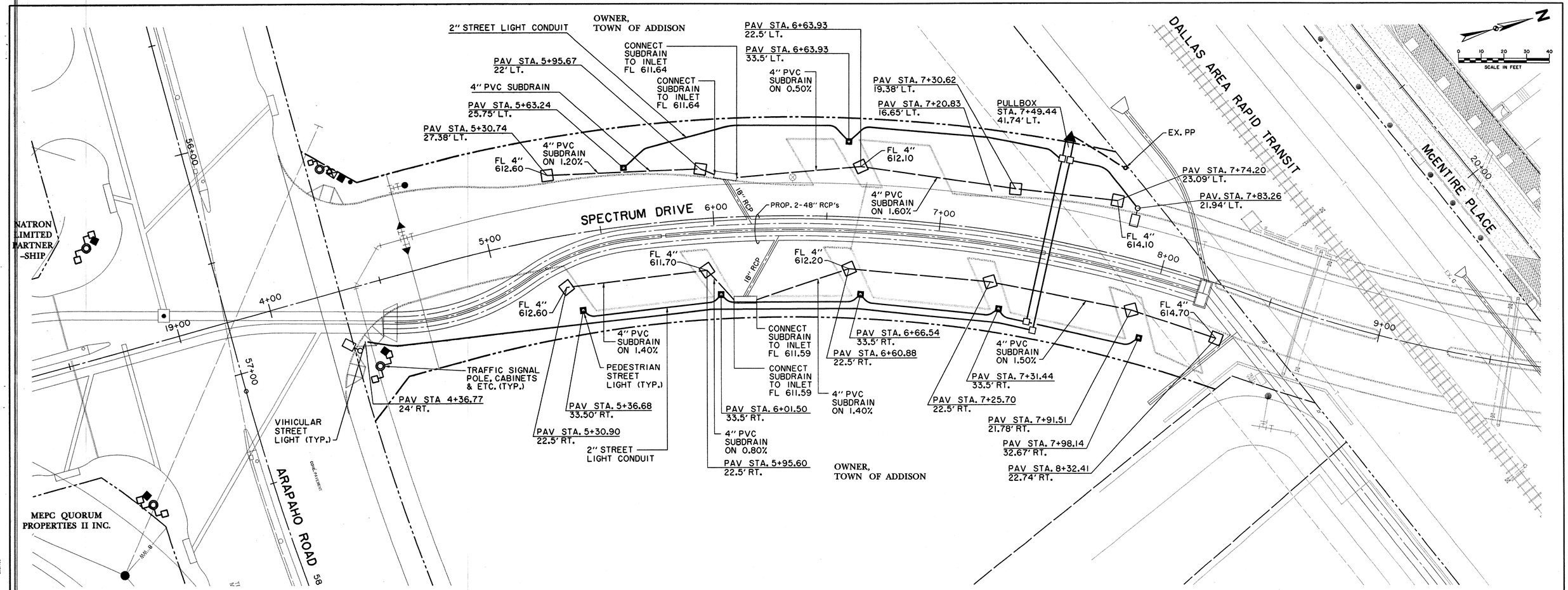

NOTE:

CENTER TO CENTER TREE DIMENSIONS ARE MEASURED ALONG THE CENTERLINE OF THE STREET.

BENCHMARKS:

"□" CUT SOUTHWEST CORNER OF CURB INLET, WEST SIDE OF SPECTRUM DRIVE, ±30' NORTH OF MORRIS AVENUE.
ELEV. 611.84

"X" CUT ON CONC. TOP OF CURB OF MEDIAN NOSE ON SPECTRUM DRIVE AT INTERSECTION OF McENTIRE PLACE.
ELEV. 619.30

STATE OF TEXAS
DAVID E. MEYERS
81512
REGISTERED PROFESSIONAL ENGINEER
1/5/04

DATE	DESCRIPTION	REF NO.
1/05/04	ISSUED FOR CONSTRUCTION	
11/07/03	ISSUED FOR BID	

STREETSCAPE PLAN

SPECTRUM DRIVE EXTENSION

TOWN OF ADDISON, TEXAS

Huitt - Zollars, Inc.
3131 Mckinney Ave., Suite 600, Dallas, TX 75204
Phone (214) 871-3311/Fax (214) 871-0757

DESIGN	DRAWN	APPR.	SCALE	DATE	PROJECT NO.	NO.
HZI	HZI	DEM	1"=20'	NOV 2003	01-3220-01	10

h:\proj\01322001\dgn\32200ILS01.DGN

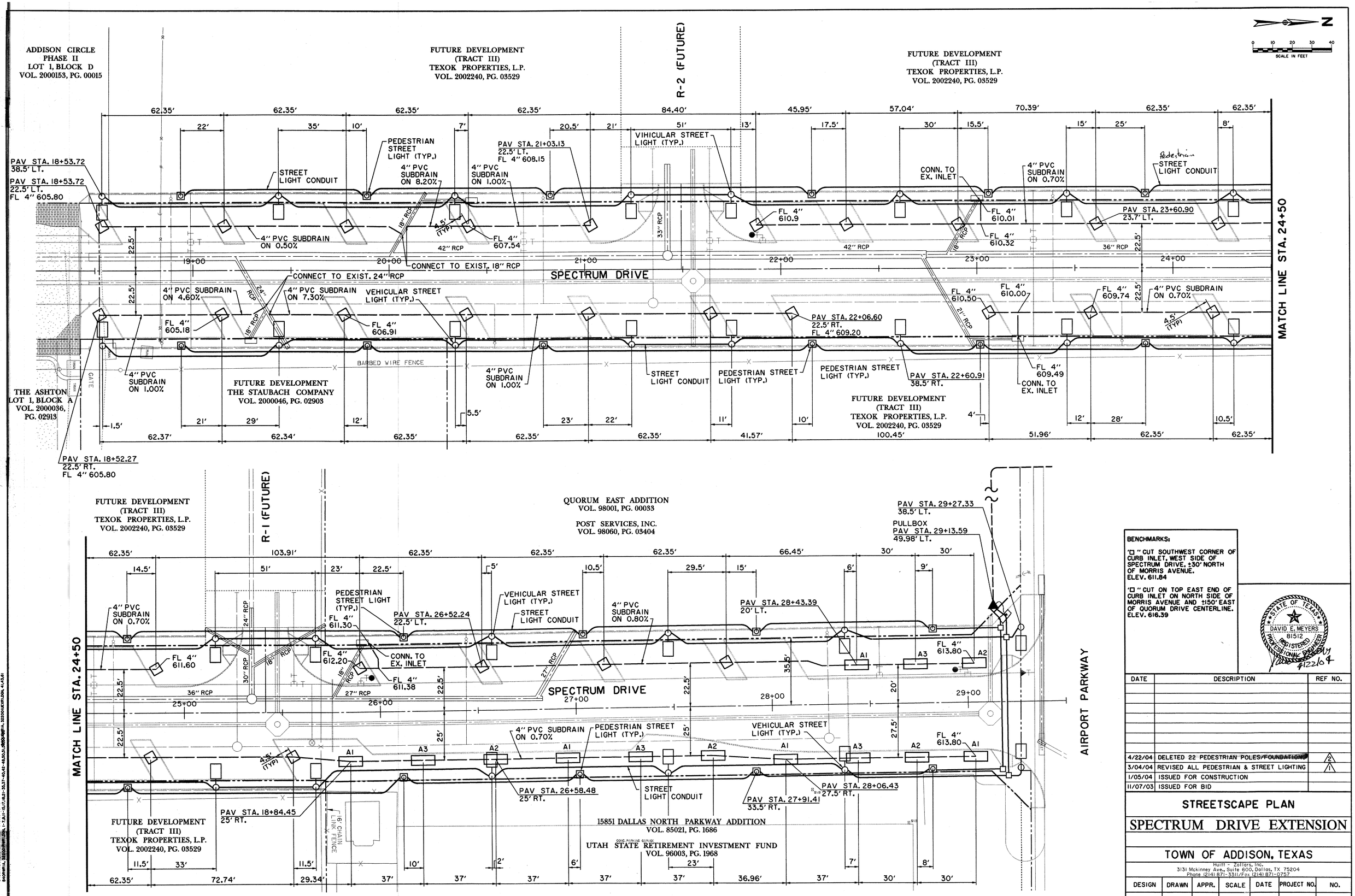

BENCHMARKS:

'□" CUT SOUTHWEST CORNER OF CURB INLET, WEST SIDE OF SPECTRUM DRIVE, ±30' NORTH OF MORRIS AVENUE. ELEV. 611.84

'□" CUT ON TOP EAST END OF CURB INLET ON NORTH SIDE OF MORRIS AVENUE AND ±150' EAST OF QUORUM DRIVE CENTERLINE. ELEV. 616.39

STATE OF TEXAS — DAVID E. MEYERS 81512 — REGISTERED PROFESSIONAL ENGINEER — 4/22/04

DATE	DESCRIPTION	REF NO.
4/22/04	DELETED 22 PEDESTRIAN POLES/FOUNDATIONS	2
3/04/04	REVISED ALL PEDESTRIAN & STREET LIGHTING	1
1/05/04	ISSUED FOR CONSTRUCTION	
11/07/03	ISSUED FOR BID	

STREETSCAPE PLAN

SPECTRUM DRIVE EXTENSION

TOWN OF ADDISON, TEXAS

Hulitt - Zollars, Inc.
3131 Mckinney Ave., Suite 600, Dallas, TX 75204
Phone (214) 871-3311/Fax (214) 871-0757

DESIGN	DRAWN	APPR.	SCALE	DATE	PROJECT NO.	NO.
HZI	HZI	DEM	1"=20'	NOV 2003	01-3220-01	11

h:\proj\01132200\dgn\32200ILS02.DGN

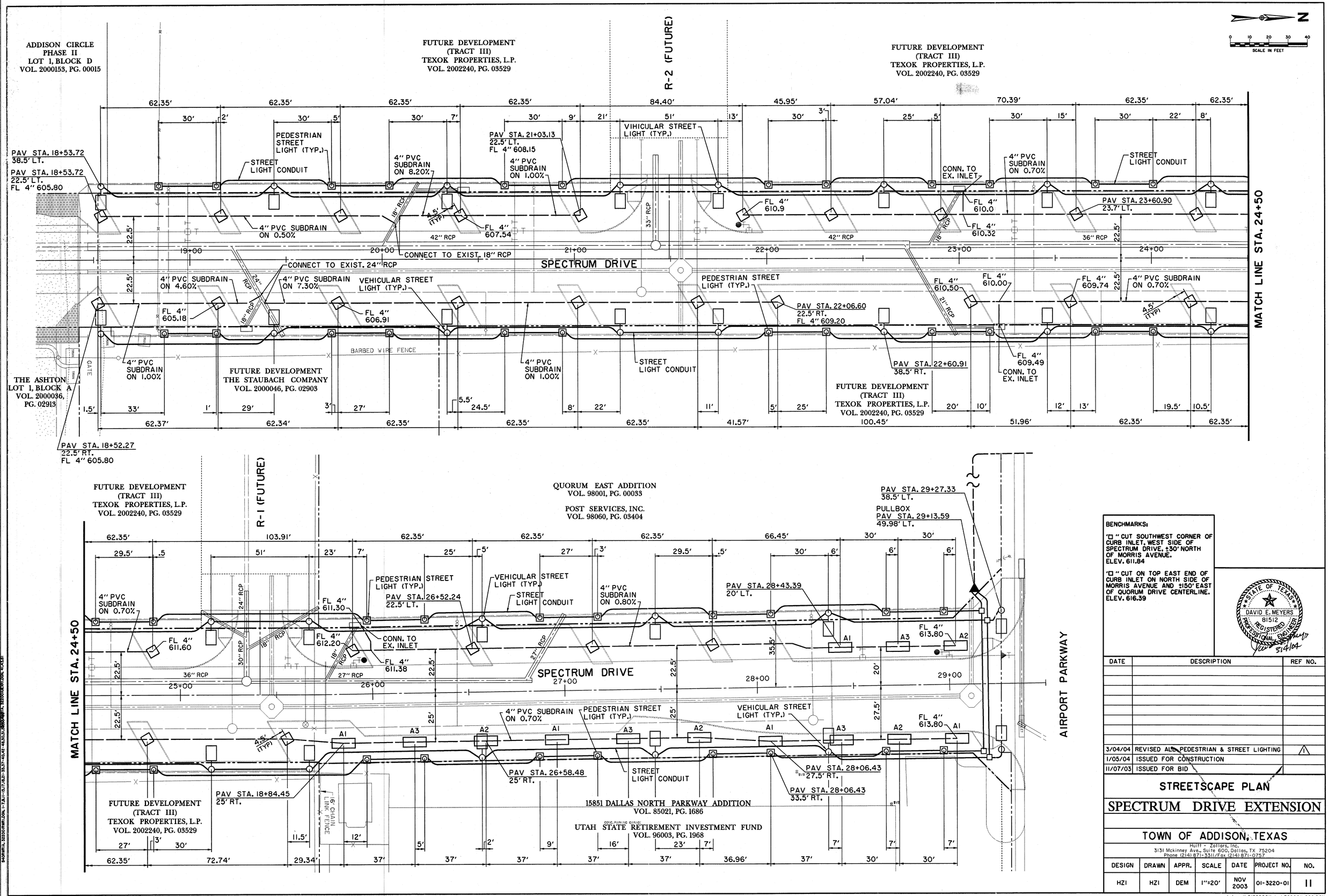

BENCHMARKS:

'□ " CUT SOUTHWEST CORNER OF CURB INLET, WEST SIDE OF SPECTRUM DRIVE, ±30' NORTH OF MORRIS AVENUE.
ELEV. 611.84

'□ " CUT ON TOP EAST END OF CURB INLET ON NORTH SIDE OF MORRIS AVENUE AND ±150' EAST OF QUORUM DRIVE CENTERLINE.
ELEV. 616.39

STATE OF TEXAS
DAVID E. MEYERS
81512
REGISTERED PROFESSIONAL ENGINEER
3/4/04

DATE	DESCRIPTION	REF NO.
3/04/04	REVISED ALL PEDESTRIAN & STREET LIGHTING	1
1/05/04	ISSUED FOR CONSTRUCTION	
11/07/03	ISSUED FOR BID	

STREETSCAPE PLAN

SPECTRUM DRIVE EXTENSION

TOWN OF ADDISON, TEXAS

Huitt - Zollars, Inc.
3131 Mckinney Ave., Suite 600, Dallas, TX 75204
Phone (214) 871-3311/Fax (214) 871-0757

DESIGN	DRAWN	APPR.	SCALE	DATE	PROJECT NO.	NO.
HZI	HZI	DEM	1"=20'	NOV 2003	01-3220-01	11

h:\proj\01322001\dgn\322001LSC2.DGN

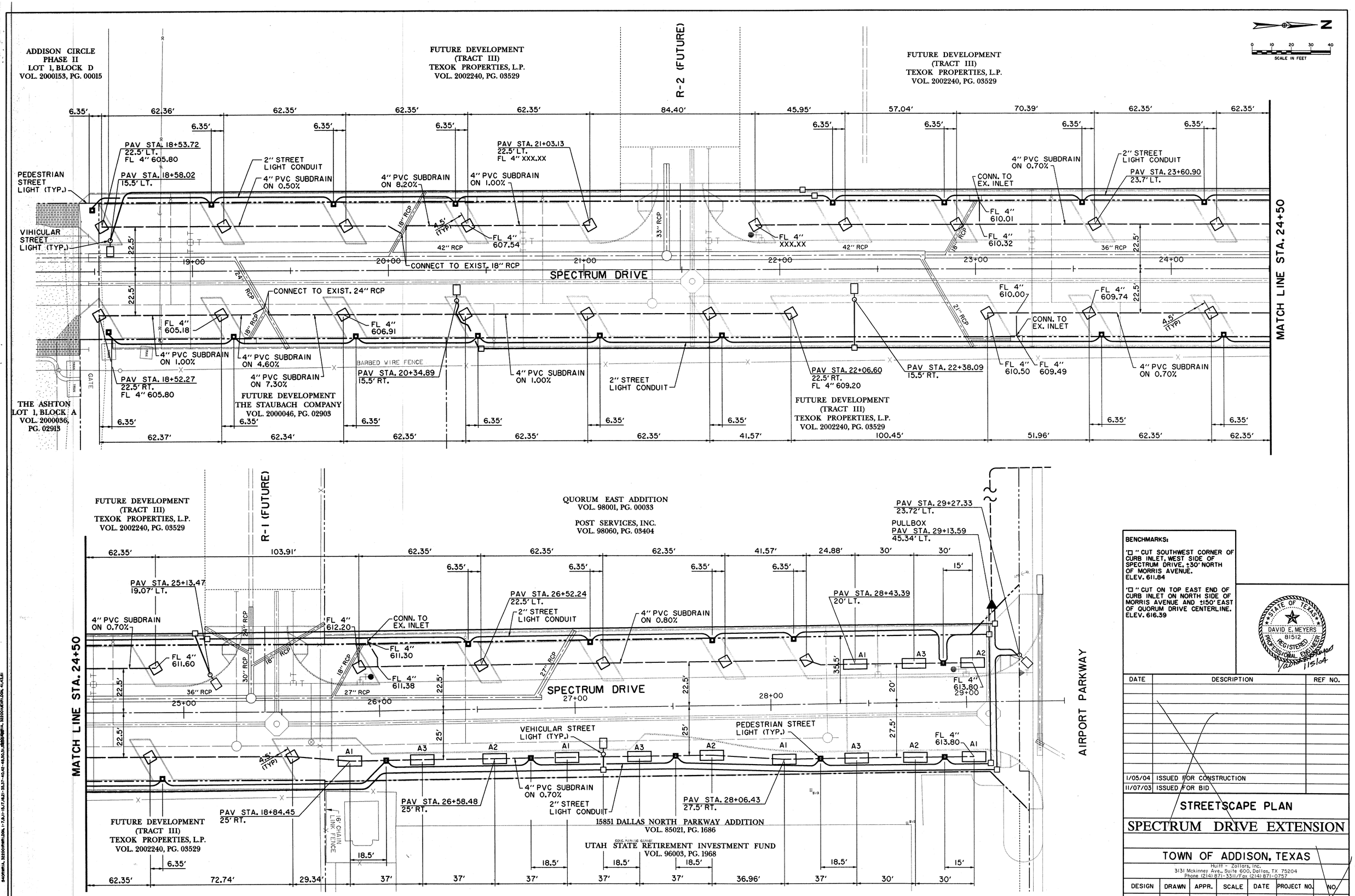

BENCHMARKS:

'□' CUT SOUTHWEST CORNER OF CURB INLET, WEST SIDE OF SPECTRUM DRIVE, ±30' NORTH OF MORRIS AVENUE. ELEV. 611.84

'□' CUT ON TOP EAST END OF CURB INLET ON NORTH SIDE OF MORRIS AVENUE AND ±150' EAST OF QUORUM DRIVE CENTERLINE. ELEV. 616.39

STATE OF TEXAS
DAVID E. MEYERS
81512
REGISTERED PROFESSIONAL ENGINEER
11/5/04

DATE	DESCRIPTION	REF NO.
1/05/04	ISSUED FOR CONSTRUCTION	
11/07/03	ISSUED FOR BID	

STREETSCAPE PLAN

SPECTRUM DRIVE EXTENSION

TOWN OF ADDISON, TEXAS

Hulitt - Zollars, Inc.
3131 Mckinney Ave., Suite 600, Dallas, TX 75204
Phone (214) 871-3311/Fax (214) 871-0757

DESIGN	DRAWN	APPR.	SCALE	DATE	PROJECT NO.	NO.
HZI	HZI	DEM	1"=20'	NOV 2003	01-3220-01	1

h:\proj\01322001\dgn\32200ILS02.DGN

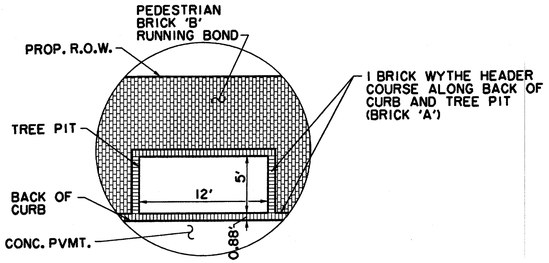

A — 5' X 12' TREE PIT DETAIL (SPECTRUM DRIVE - EAST SIDE)

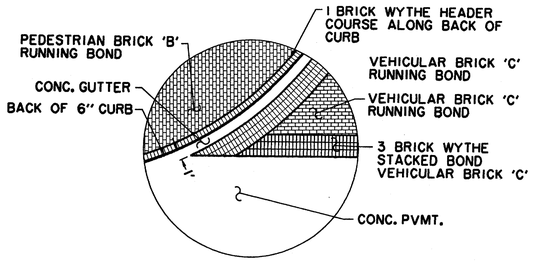

B — CROSSWALK DETAIL

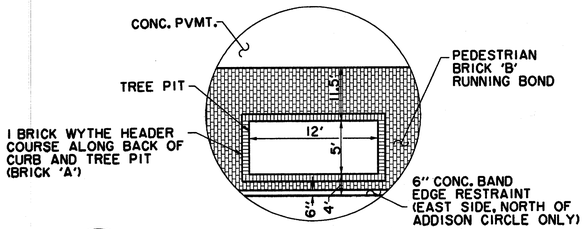

C — 5' X 12' TREE PIT DETAIL (SPECTRUM DRIVE - WEST SIDE)

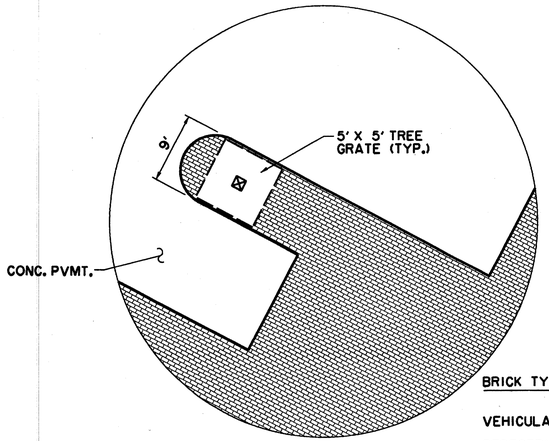

D — HEAD-IN PARKING DETAIL

BRICK TYPES:

VEHICULAR BRICK "C" - 2⅜"x3½"x7½" (ACME)

PEDESTRIAN BRICK "A" - 2¼"x4"x8" (BROWN)

PEDESTRIAN BRICK "B" - 2¼"x4"x8" (AUTUMN HAZE)

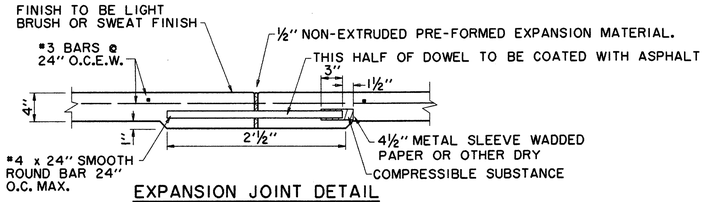

EXPANSION JOINT DETAIL

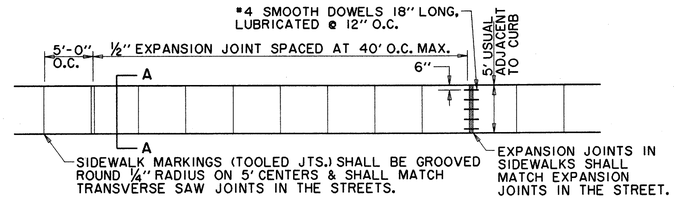

PLAN

REINFORCED CONCRETE SIDEWALK

N.T.S.

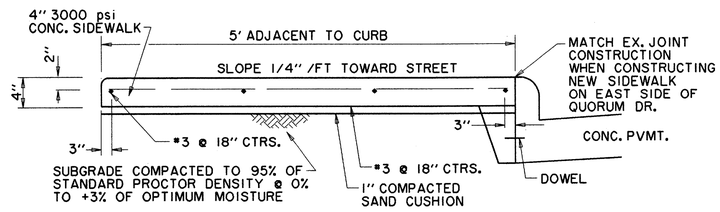

TYPICAL SECTION A-A

N.T.S.

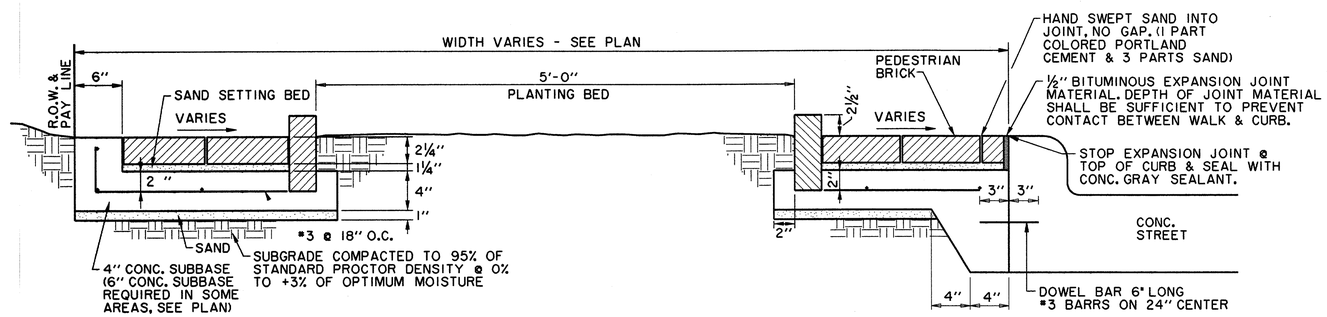

BRICK SIDEWALK INSTALLATION IN PEDESTRIAN AREA

N.T.S.

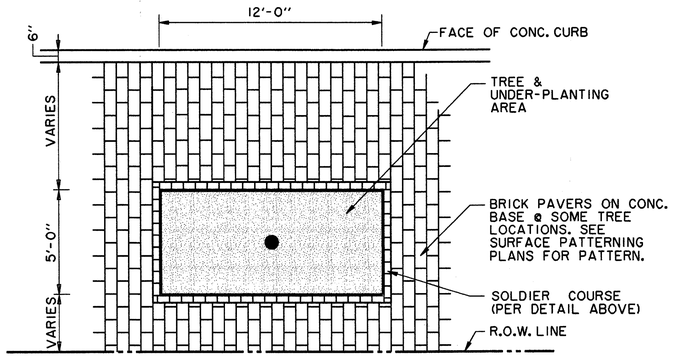

TREE PIT PLAN (SPECTRUM DRIVE)

N.T.S.

GENERAL NOTES CONCRETE SUBBASE FOR SIDEWALKS

1. REINFORCED CONCRETE SIDEWALK SHALL BE A MINIMUM OF FOUR (4) INCHES THICK AND SHALL BE 3000 PSI AT 28 DAYS (5 SACK MIX) UNLESS NOTED OTHERWISE.
2. A ¼" CHAMFER OR ¼" RADIUS WILL BE REQUIRED ON ALL EXPOSED EDGES OF CONCRETE SIDEWALK.
3. ALL BAR DIMENSIONS ARE GIVEN AS CENTER TO CENTER OF BARS AND ARE LOCATED AS SHOWN.
4. ALL REINFORCING STEEL SHALL BE NO. 3 ON 18" CENTERS LONGITUDINALLY, 18" CENTERS TRANSVERSELY AND SHALL CONFORM TO THE REQUIREMENTS OF ASTM A-615, GRADE 60.
5. 1" THICK MIN. FINE WASHED SAND CUSHION SHALL BE FREE FROM ORGANIC MATERIALS OR CLAYS AND SHALL BE USED FOR GRADE ADJUSTMENT.
6. SUBGRADE SHALL BE COMPACTED TO A DENSITY NOT LESS THAN 95% OF STANDARD PROCTOR DENSITY AT 0 TO +3% OF OPTIMUM MOISTURE.
7. TOOLED JOINTS (CONTRACTION JOINTS) SHALL BE ON FIVE (5) FOOT CENTERS AND SHALL BE ROUND ONE-FOURTH (1/4) INCH RADIUS.
8. A ONE-HALF (1/2) INCH EXPANSION JOINT SHALL BE PLACED EVERY FORTY (40) FEET, AND WHERE WORKS ABUT OLD WORK, OR WHERE NEW WORK IS CONSTRUCTED ADJACENT TO OTHER CONCRETE.
9. EXPOSED SIDEWALKS SHALL BE FINISHED BY LIGHTLY BROOMING SURFACE TRANSVERSELY TO DIRECTION OF MAIN TRAFFIC.

STATE OF TEXAS — DAVID E. MEYERS — 81512 — REGISTERED PROFESSIONAL ENGINEER — 1/5/04

DATE	DESCRIPTION	REF NO.
1/05/04	ISSUED FOR CONSTRUCTION	
11/07/03	ISSUED FOR BID	

STREETSCAPE DETAILS

SPECTRUM DRIVE EXTENSION

TOWN OF ADDISON, TEXAS

Huitt - Zollars, Inc.
3131 Mckinney Ave., Suite 600, Dallas, TX 75204
Phone (214) 871-3311/Fax (214) 871-0757

DESIGN	DRAWN	APPR.	SCALE	DATE	PROJECT NO.	NO.
HZI	HZI	DEM	N.T.S.	NOV 2003	01-3220-01	12

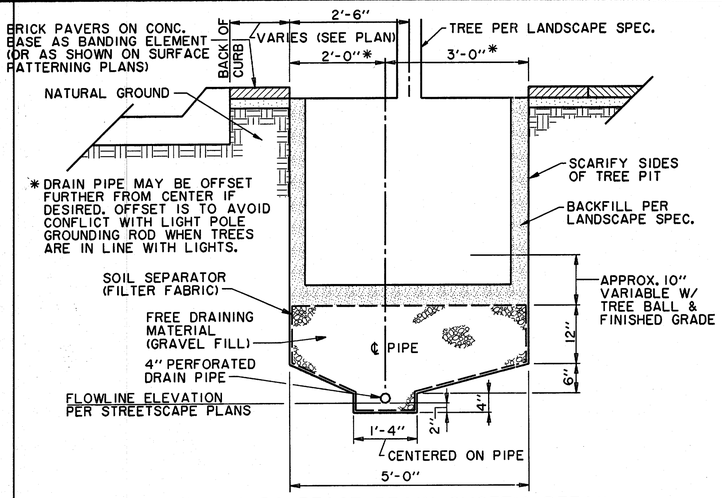

SUBSURFACE DRAIN SYSTEM DETAIL
(SECTION PERPENDICULAR TO CURB)
N.T.S.
(TO BE USED ON ALL TREES UNLESS OTHERWISE NOTED)

USE CAUTION WHEN SETTING ANCHOR BOLTS. BOLTS MUST BE VERT. STRAIGHT & CENTERED ON DIMENSIONS SHOWN.

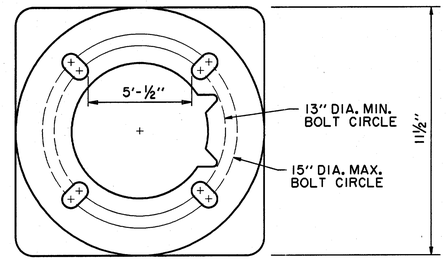

BASE ANCHOR PLATE (PEDESTRIAN POLE) △1
N.T.S.

NOTE:
ADEQUATE DRAINAGE MUST BE PROVIDED IN CONC. FOUNDATION OR GROUT.

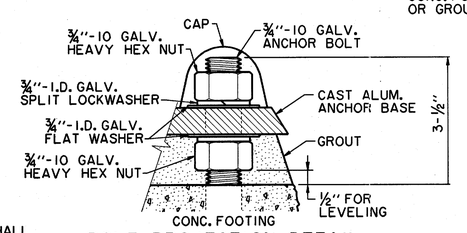

BOLT PROJECTION DETAIL (PEDESTRIAN) △1
N.T.S.

STREET LIGHTING NOTES

1. THE PEDESTRIAN STREET LIGHTING FOR THIS PROJECT WILL CONSIST OF INSTALLATION OF 2" PVC CONDUIT, LIGHT POLE BASES, PULL BOXES (HANDHOLES) LIGHT POLES, LUMINAIRES, WIRING & CONNECTION TO POWER SOURCE AS A COMPLETE SYSTEM PER DETAILED SPECIFICATIONS.
2. ALL STREET LIGHTING CONDUIT IS TO BE INSTALLED WITH A MIN. OF 24 INCHES OF COVER TO THE TOP OF THE PIPE FROM FINISHED PVMT. TO AVOID CONFLICT WITH IRRIGATION LINES WHICH WILL BE @ 12" & 18" DEPTH. CONDUIT SHOULD BE NO DEEPER THAN 36" TO AVOID CONFLICT WITH OTHER UTILITIES.
3. △1 FOR THE PURPOSES OF COORDINATION, PEDESTRIAN AND VEHICULAR LIGHTS TO BE INSTALLED PER THE STREETSCAPE PLANS FOR THIS PROJECT WILL BE PER THE TOWN OF ADDISON LIGHTING MASTER PLAN SPECIFICATIONS:
4. LOCATIONS OF ANY STREET LIGHTS MAY NOT BE ALTERED WITHOUT PERMISSION FROM THE ENGINEER.
5. THE LETTER "C" SHALL BE STAMPED OR CHISELED ON CURB AT ALL LOCATIONS OF CONDUIT UNDER STREETS, DRIVES AND INTERSECTIONS.
6. △1 SEE SPECIFICATIONS FOR VEHICULAR POLE, FOUNDATION, MOUNTING HARDWARE ETC... PER THE "TOWN OF ADDISON LIGHTING MASTER PLAN".

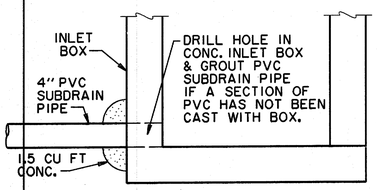

PVC SUBDRAIN PIPE CONNECTION TO INLET BOX
N.T.S.

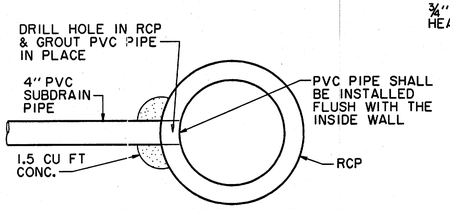

PVC SUBDRAIN PIPE CONNECTION TO STORM DRAINAGE PIPE
N.T.S.

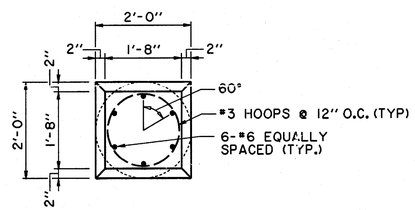

LIGHT FIXTURE FOUNDATION AND CAP PLAN (PEDESTRIAN AND VEEHICULAR POLE) △1
N.T.S.

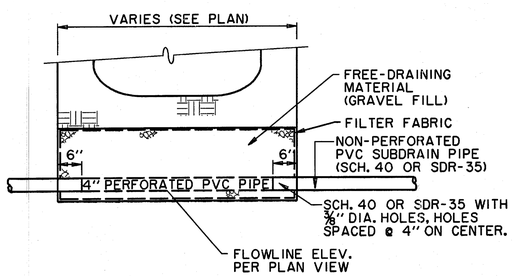

SUBSURFACE DRAIN SYSTEM DETAIL
(SECTION PARALLEL TO CURB)
N.T.S.

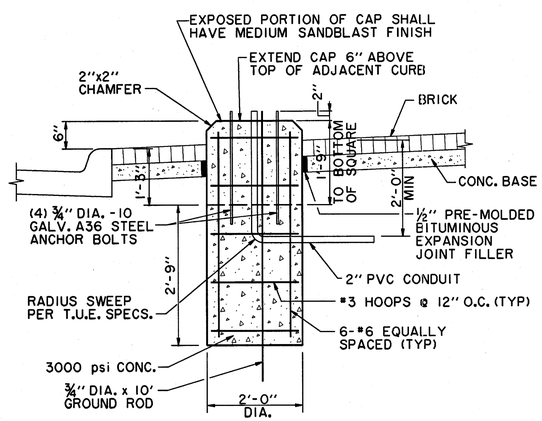

PEDESTRIAN
LIGHT FIXTURE FOUNDATION AND CAP SECTION
N.T.S.

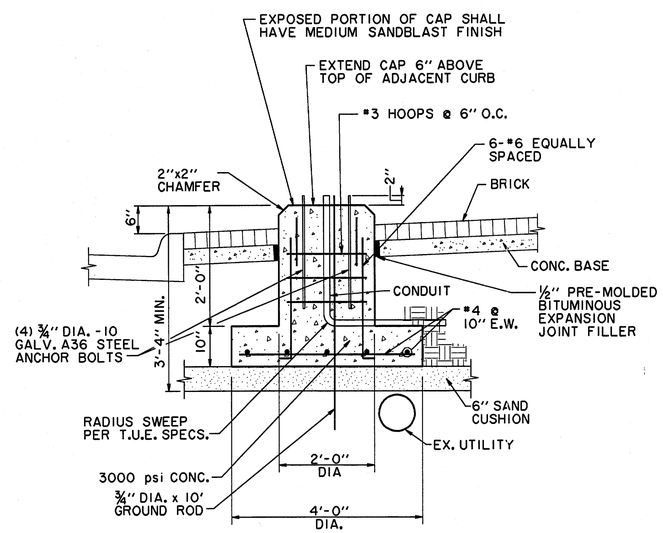

ALTERNATE
PEDESTRIAN LIGHT FIXTURE FOOTING AT UTILITY CONFLICT
N.T.S.
(NOT TO BE USED FOR HANGING LIGHT FOUNDATION)

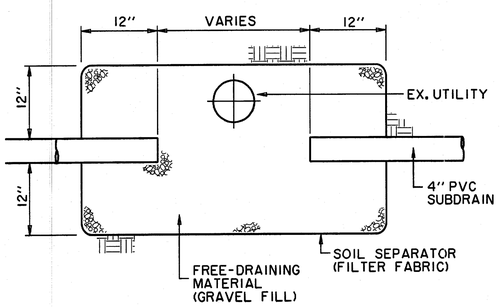

INSTALLATION OF SUBDRAIN AT UTILITY CONFLICT
N.T.S.

STATE OF TEXAS
DAVID E. MEYERS
81512
REGISTERED PROFESSIONAL ENGINEER
3/4/04

DATE	DESCRIPTION	REF NO.
3/04/04	REVISED ALL PEDESTRIAN & STREET LIGHTING	△1
1/05/04	ISSUED FOR CONSTRUCTION	
11/07/03	ISSUED FOR BID	

STREETSCAPE DETAILS

SPECTRUM DRIVE EXTENSION

TOWN OF ADDISON, TEXAS

Huitt - Zollars, Inc.
3131 Mckinney Ave., Suite 600, Dallas, TX 75204
Phone (214) 871-5311/Fax (214) 871-0757

DESIGN	DRAWN	APPR.	SCALE	DATE	PROJECT NO.	NO.
HZI	HZI	DEM	N.T.S.	NOV 2003	01-3220-01	13

h:\proj\01322001\dgn\32200ICDT04.DGN

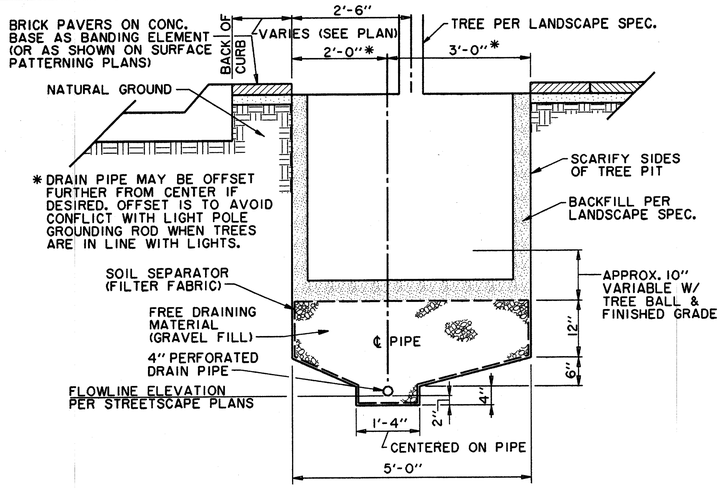

SUBSURFACE DRAIN SYSTEM DETAIL
(SECTION PERPENDICULAR TO CURB)

N.T.S.

(TO BE USED ON ALL TREES UNLESS OTHERWISE NOTED)

USE CAUTION WHEN SETTING ANCHOR BOLTS. BOLTS MUST BE VERT. STRAIGHT & CENTERED ON DIMENSIONS SHOWN.

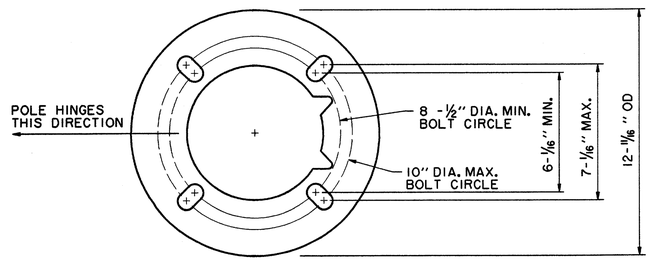

ROUND BOTTOM HINGE BASE ANCHOR BOLT TEMPLATE

N.T.S.

NOTE:

ADEQUATE DRAINAGE MUST BE PROVIDED IN CONC. FOUNDATION OR GROUT.

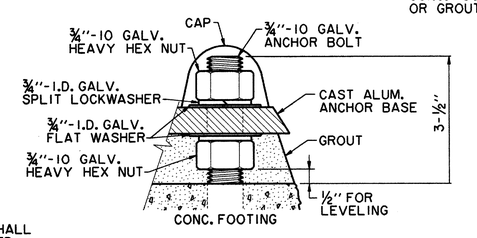

BOLT PROJECTION DETAIL

N.T.S.

STREET LIGHTING NOTES

1. THE PEDESTRIAN STREET LIGHTING FOR THIS PROJECT WILL CONSIST OF INSTALLATION OF 2" PVC CONDUIT, LIGHT POLE BASES, PULL BOXES (HANDHOLES) LIGHT POLES, LUMINAIRES, WIRING & CONNECTION TO POWER SOURCE AS A COMPLETE SYSTEM PER DETAILED SPECIFICATIONS.

2. ALL STREET LIGHTING CONDUIT IS TO BE INSTALLED WITH A MIN. OF 24 INCHES OF COVER TO THE TOP OF THE PIPE FROM FINISHED PVMT. TO AVOID CONFLICT WITH IRRIGATION LINES WHICH WILL BE @ 12" & 18" DEPTH. CONDUIT SHOULD BE NO DEEPER THAN 36" TO AVOID CONFLICT WITH OTHER UTILITIES.

3. FOR THE PURPOSES OF COORDINATION, PEDESTRIAN LIGHTS TO BE INSTALLED PER THE STREETSCAPE PLANS FOR THIS PROJECT WILL BE THE FOLLOWING:

   THIS POLE WILL BE INSTALLED WITH A 175 WATT METAL HALIDE BEGA 9801 ED-17MH/120V FIXTURE & LUMINAIRE.

   POLES WILL BE PRIMED & PAINTED AT THE FACTORY.

4. LOCATIONS OF ANY STREET LIGHTS MAY NOT BE ALTERED WITHOUT PERMISSION FROM THE ENGINEER.

5. THE LETTER "C" SHALL BE STAMPED OR CHISELED ON CURB AT ALL LOCATIONS OF CONDUIT UNDER STREETS, DRIVES AND INTERSECTIONS.

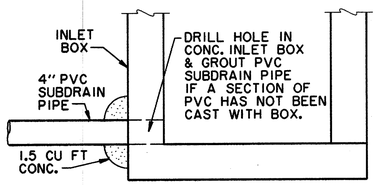

PVC SUBDRAIN PIPE CONNECTION TO INLET BOX

N.T.S.

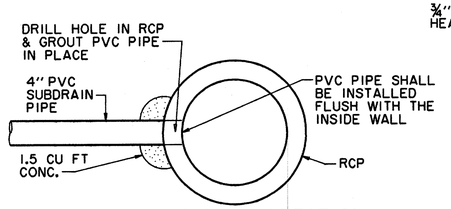

PVC SUBDRAIN PIPE CONNECTION TO STORM DRAINAGE PIPE

N.T.S.

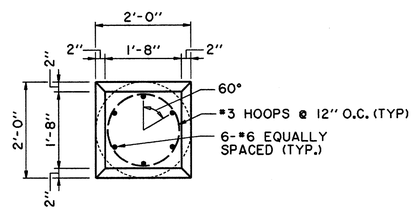

LIGHT FIXTURE FOUNDATION AND CAP PLAN

N.T.S.

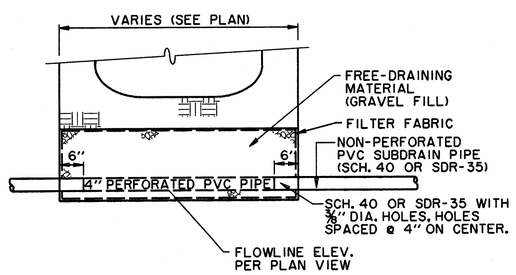

SUBSURFACE DRAIN SYSTEM DETAIL (SECTION PARALLEL TO CURB)

N.T.S.

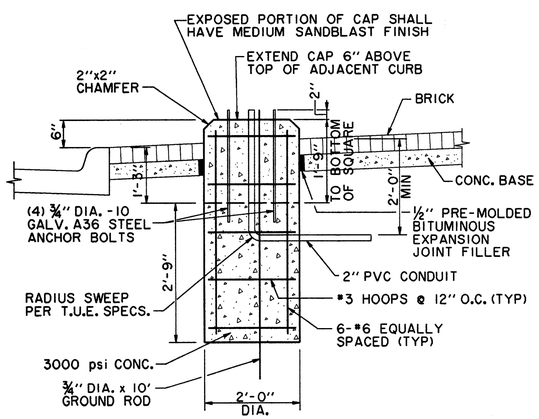

PEDESTRIAN LIGHT FIXTURE FOUNDATION AND CAP SECTION

N.T.S.

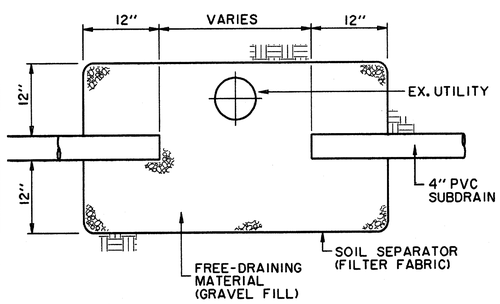

INSTALLATION OF SUBDRAIN AT UTILITY CONFLICT

N.T.S.

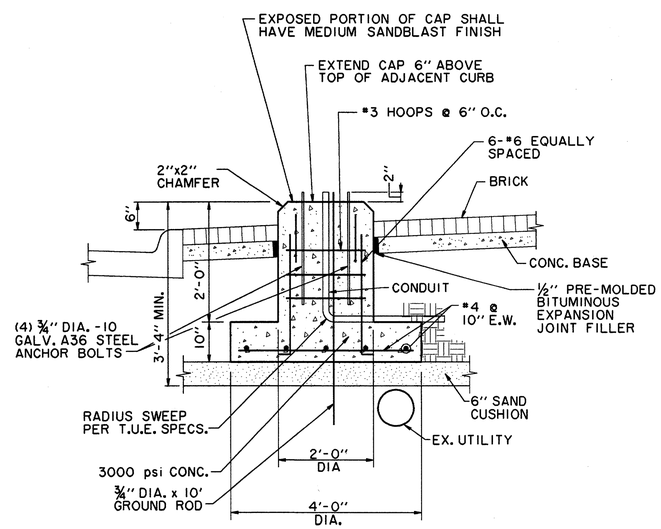

ALTERNATE PEDESTRIAN LIGHT FIXTURE FOOTING AT UTILITY CONFLICT

N.T.S.

(NOT TO BE USED FOR HANGING LIGHT FOUNDATION)

STATE OF TEXAS
DAVID E. MEYERS
81512
REGISTERED PROFESSIONAL ENGINEER
1/5/04

DATE	DESCRIPTION	REF NO.
1/05/04	ISSUED FOR CONSTRUCTION	
11/07/03	ISSUED FOR BID	

STREETSCAPE DETAILS

SPECTRUM DRIVE EXTENSION

TOWN OF ADDISON, TEXAS

Huitt - Zollars, Inc.
3131 Mckinney Ave., Suite 600, Dallas, TX 75204
Phone (214) 871-3311/Fax (214) 871-0757

DESIGN	DRAWN	APPR.	SCALE	DATE	PROJECT NO.	NO.
HZI	HZI	DEM	N.T.S.	NOV 2003	01-3220-01	13

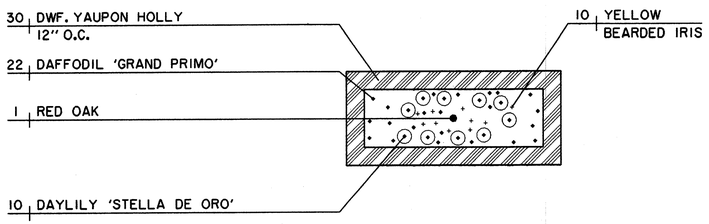

A1 A2 A3 5'X12' TREE WELL PLANTING

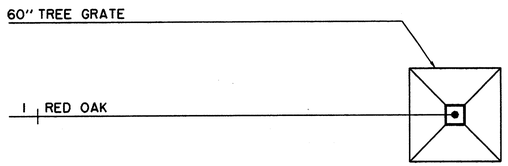

PLANT LIST

QUANTITY	COMMON NAME	BOTANICAL NAME	SIZE/REMARKS
Shade Trees			
52	Red Oak	*Quercus shumardii*	200 gal., 6" cal, 18' ht., 12-14' sp., matched
Shrubs			
390	Dwarf Yaupon Holly	*Ilex vomitoria 'nana'*	1-gal., 8-10" ht, 8-10" spr., full
Perennials/Ground Cover			
110	Daffodil 'Sweetness'	*Narcissus sp. 'Sweetness'*	#1 bulbs
130	Daylilly 'Stella de Oro'	*Hemerocallis 'Stella de Oro'*	1-gal. full
130	Yellow Bearded Iris	*Iris hybrids*	1-gal. full
286	Daffodil 'Grand Primo'	*Narcissus x 'Grand Primo'*	1-gal. full
78	Bleeding Heart	*Setcreasia pallida*	1-gal. full

STATE OF TEXAS
DAVID E. MEYERS
81512
REGISTERED PROFESSIONAL ENGINEER
1/5/04

DATE	DESCRIPTION	REF NO.
1/05/04	ISSUED FOR CONSTRUCTION	
11/07/03	ISSUED FOR BID	

PLANTING DETAILS

SPECTRUM DRIVE EXTENSION

TOWN OF ADDISON, TEXAS

Hulitt - Zollars, Inc.
3131 Mckinney Ave., Suite 600, Dallas, TX 75204
Phone (214) 871-3311/Fax (214) 871-0757

DESIGN	DRAWN	APPR.	SCALE	DATE	PROJECT NO.	NO.
HZI	HZI	DEM	N.T.S.	NOV 2003	01-3220-01	14

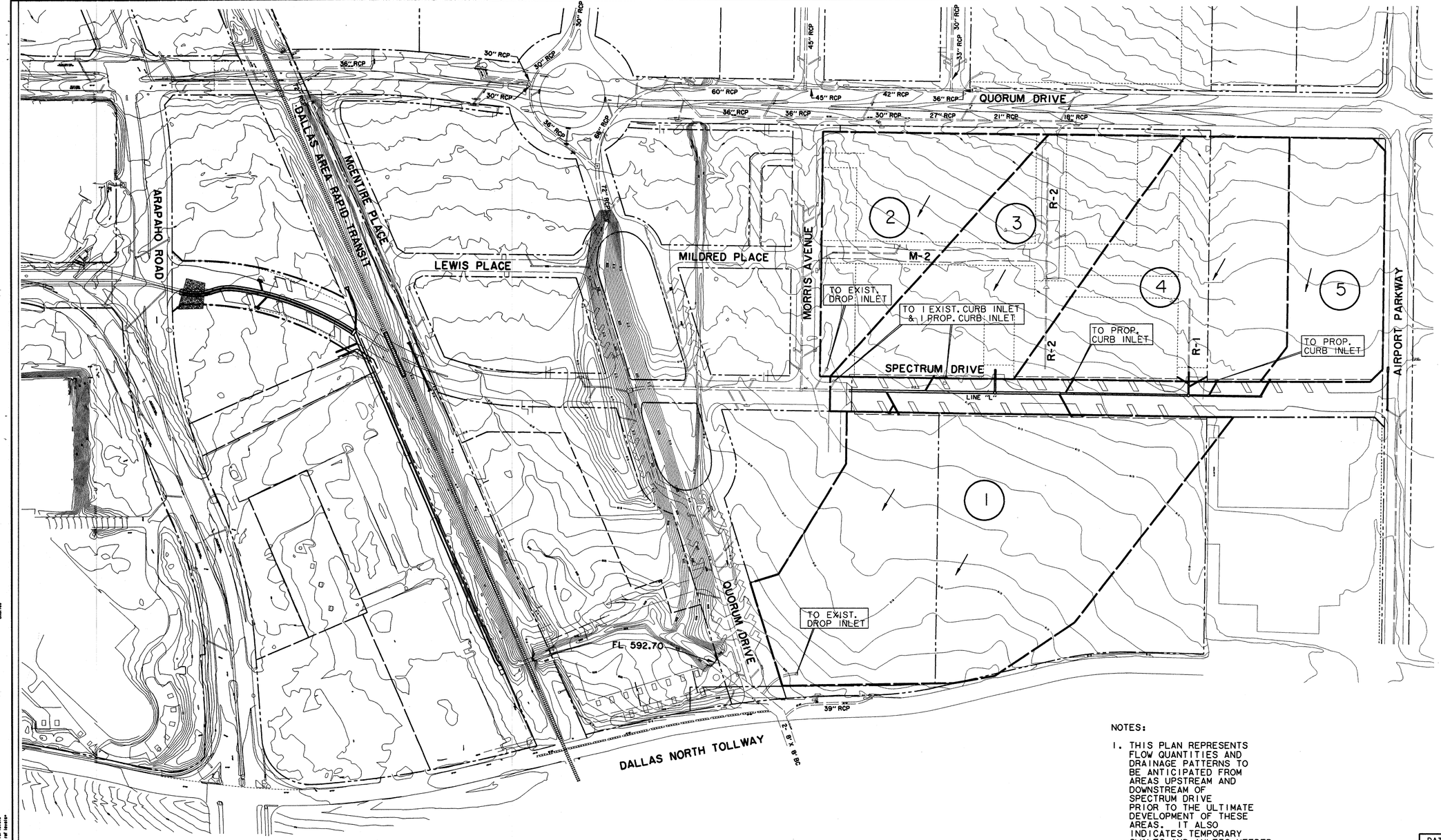

NOTES:

1. THIS PLAN REPRESENTS FLOW QUANTITIES AND DRAINAGE PATTERNS TO BE ANTICIPATED FROM AREAS UPSTREAM AND DOWNSTREAM OF SPECTRUM DRIVE PRIOR TO THE ULTIMATE DEVELOPMENT OF THESE AREAS. IT ALSO INDICATES TEMPORARY SWALES AND INLETS NEEDED TO HANDLE THESE INTERIM DRAINAGE PATTERNS. HOWEVER, THE PERMANENT STORM SEWER SYSTEM HAS BEEN DESIGNED FOR ULTIMATE DEVELOPMENT CONDITIONS.

2. EXISTING STORM SEWER LOCATIONS AND SIZES WERE OBTAINED FROM RECORD DRAWINGS FROM THE TOWN OF ADDISON. ACTUAL LOCATION IN THE FIELD MAY VARY FROM THE PLANS.

STORM WATER RUNOFF CALCULATIONS

AREA NO.	Tc (MIN.)	INTENSITY "I-100" (IN./HR)	RUNOFF COEFF. "C"	AREA "A" (ACRES)	STORM RUNOFF "Q-100"
1	20.00	6.80	0.30	8.27	16.87
2	10.00	8.74	0.30	2.72	7.13
3	10.00	8.74	0.30	3.69	9.67
4	10.00	8.74	0.30	4.30	11.27
5	10.00	8.74	0.30	2.24	5.87

STATE OF TEXAS
DAVID E. MEYERS
81512
REGISTERED PROFESSIONAL ENGINEER

DATE	DESCRIPTION	REF NO.
1/05/04	ISSUED FOR CONSTRUCTION	
11/07/03	ISSUED FOR BID	

DRAINAGE AREA MAP
OFFSITE AREAS EXISTING CONDITIONS
SPECTRUM DRIVE EXTENSION

TOWN OF ADDISON, TEXAS

Huitt - Zollars, Inc.
3131 Mckinney Ave., Suite 600, Dallas, TX 75204
Phone (214) 871-3311/Fax (214) 871-0757

DESIGN	DRAWN	APPR.	SCALE	DATE	PROJECT NO.	NO.
HZI	HZI	DEM	1"=100'	NOV 2003	01-3220-01	15

hz\proj\01322001\dgn\32200IDA02.DGN

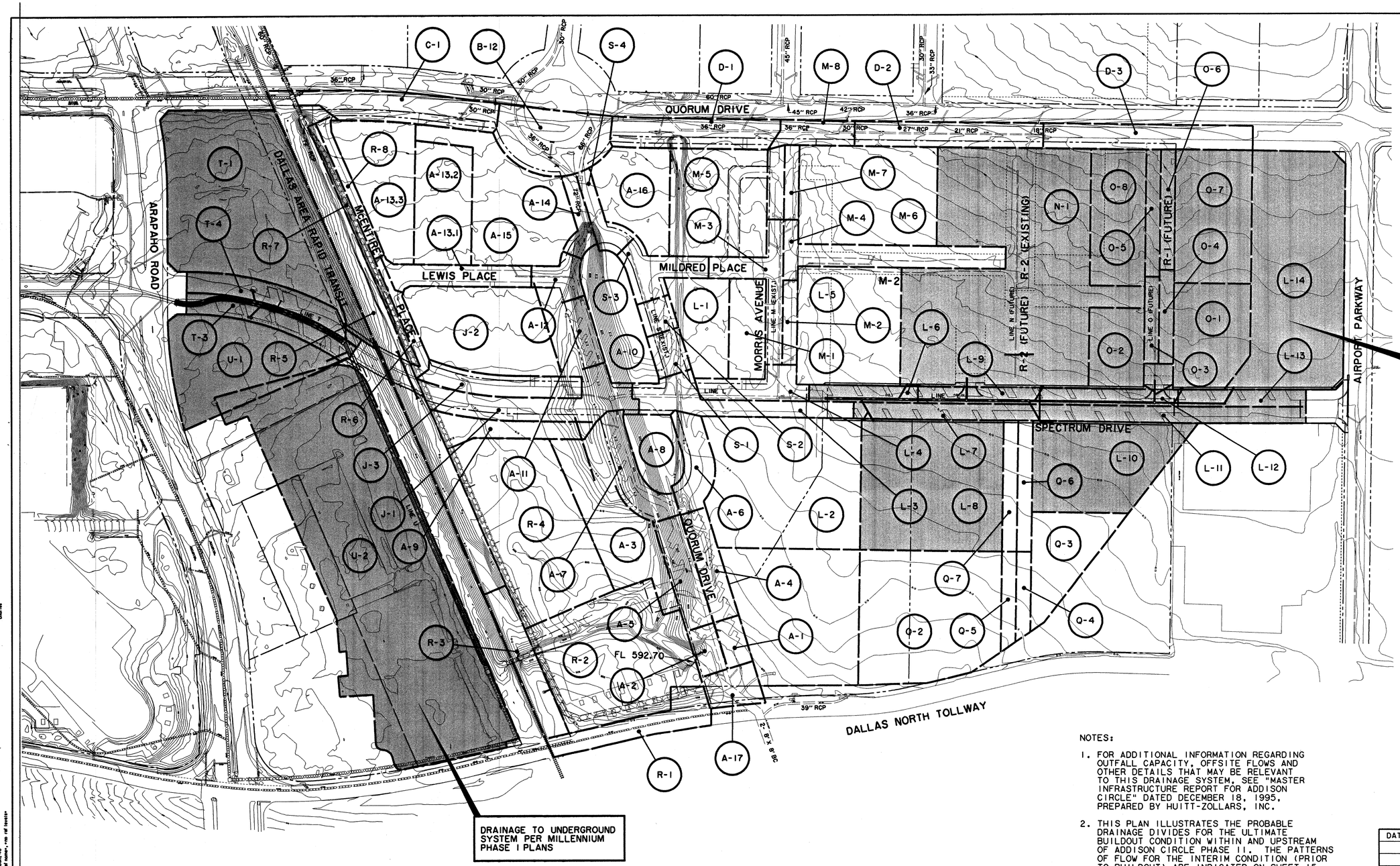

NOTES:

1. FOR ADDITIONAL INFORMATION REGARDING OUTFALL CAPACITY, OFFSITE FLOWS AND OTHER DETAILS THAT MAY BE RELEVANT TO THIS DRAINAGE SYSTEM, SEE "MASTER INFRASTRUCTURE REPORT FOR ADDISON CIRCLE" DATED DECEMBER 18, 1995, PREPARED BY HUITT-ZOLLARS, INC.
2. THIS PLAN ILLUSTRATES THE PROBABLE DRAINAGE DIVIDES FOR THE ULTIMATE BUILDOUT CONDITION WITHIN AND UPSTREAM OF ADDISON CIRCLE PHASE II. THE PATTERNS OF FLOW FOR THE INTERIM CONDITION (PRIOR TO BUILDOUT) ARE INDICATED ON SHEET 15 OF THIS SET. THE PERMANENT DRAINAGE SYSTEM HAS BEEN DESIGNED BASED ON FULLY DEVELOPED CONDITIONS. TEMPORARY INLETS AND SWALES HAVE BEEN SIZED FOR UNDEVELOPED (OR ''EXISTING'') FLOWS PER SHEET 15.
3. FOR RUNOFF AND INLET CALCULATIONS, SEE SHEET 17.
4. LINE 'M' AND LATERAL 'M-6' ARE SIZED TO CONVEY RUNOFF FROM AREA 'N-7' IN THE EVENT FUTURE DEVELOPMENT DIFFERS FROM WHAT IS ANTICIPATED.
5. FUTURE LINE 'Q' IS SIZED TO CONVEY RUNOFF FROM AREA 'L-8' IN THE EVENT FUTURE DEVELOPMENT DIFFERS FROM WHAT IS ANTICIPATED.
6. AREA 'L-2' CAN ALSO DRAIN TO A STUB PROVIDED FROM LINE 'A' AS FUTURE DEVELOPMENT DICTATES.
7. EXISTING STORM SEWER LOCATIONS AND SIZES WERE OBTAINED FROM RECORD DRAWINGS FROM THE TOWN OF ADDISON. ACTUAL LOCATION IN THE FIELD MAY VARY FROM THE PLANS.

STATE OF TEXAS
DAVID E. MEYERS
81512
REGISTERED
PROFESSIONAL ENGINEER
David 11/5/04

DATE	DESCRIPTION	REF NO.
1/05/04	ISSUED FOR CONSTRUCTION	
11/07/03	ISSUED FOR BID	

DRAINAGE AREA MAP
PROPOSED & FUTURE DEVELOPMENT
SPECTRUM DRIVE EXTENSION

TOWN OF ADDISON, TEXAS

Huitt - Zollars, Inc.
3131 Mckinney Ave., Suite 600, Dallas, TX 75204
Phone (214) 871-3311/Fax (214) 871-0757

DESIGN	DRAWN	APPR.	SCALE	DATE	PROJECT NO.	NO.
HZI	HZI	DEM	1"=100'	NOV 2003	01-3220-01	16

h:\proj\01322001\dgn\32200IDA01.DGN

STORM SEWER CALCULATIONS

COLLECTION POINT INLETS OR MANHOLES UPSTREAM STATION	DOWNSTREAM STATION	DISTANCE BETWEEN COLLECTION POINTS	INCREMENTAL DRAINAGE AREA INCREM. AREA NO.	AREA "A" (ACRES)	RUNOFF COEFF. "C"	INCREM. "CA"	ACCUM. "CA"	TIME @ UPSTREAM STATION (MIN.)	INTENSITY "I-100" (IN./HR)	100 YR. STORM RUNOFF "Q"	SLOPE OF HYDRAULIC GRADIENT (FT./FT.)	STORM SEWER SIZE	VELOCITY "V" (F.P.S.)	FLOW TIME IN SEWER (MIN.)	TIME @ DOWNSTREAM STATION (MIN.)	VELOCITY HEAD (FEET)	HYDRAULIC GRADE AT UPSTREAM STATION	HYDRAULIC GRADE AT DOWNSTREAM STATION	HYDRAULIC GRADE AT INLETS	COMMENTS
LINE 'O'																				
282.00	276.00	6.00	O-8	0.75	0.90	0.68	0.68	10.00	8.74	5.9	0.0014	21	2.45	0.04	10.04	0.09	613.75	613.74		FUTURE LINE
276.00	268.00	8.00	O-7	1.02	0.90	0.92	1.59	10.04	8.73	13.9	0.0038	24	4.43	0.03	10.07	0.30	613.53	613.50		FUTURE LINE
268.00	262.00	6.00	O-6	0.18	0.90	0.16	1.76	10.07	8.72	15.3	0.0046	24	4.87	0.02	10.09	0.37	613.44	613.41		FUTURE LINE
262.00	75.00	187.00	O-5	0.20	0.90	0.18	1.94	10.09	8.72	16.9	0.0056	24	5.37	0.58	10.67	0.45	613.33	612.29		FUTURE LINE
75.00	62.00	13.00	O-4	0.14	0.90	0.13	2.06	10.67	8.57	17.7	0.0061	24	5.62	0.04	10.71	0.49	612.25	612.17		FUTURE LINE
62.00	22.00	40.00	O-3	0.12	0.90	0.11	2.17	10.71	8.56	18.6	0.0067	24	5.91	0.11	10.82	0.54	612.12	611.85		FUTURE LINE
22.00	16.00	6.00	O-2	0.44	0.90	0.40	2.57	10.82	8.53	21.9	0.0050	27	5.50	0.02	10.84	0.47	611.88	611.85		
16.00	0.00	16.00	O-1	0.76	0.90	0.68	3.25	10.84	8.53	27.7	0.0046	30	5.64	0.05	10.89	0.49	611.83	611.76		
LAT. 'O-1'																				
43.00	0.00	43.00	O-1	0.76	0.90	0.68	0.68	10.00	8.74	6.0	0.0032	18	3.38	0.21	10.21	0.18	612.29	612.15		
LAT. 'O-2'																				
25.00	0.00	25.00	O-2	0.44	0.90	0.40	0.40	10.00	8.74	3.5	0.0011	18	1.96	0.21	10.21	0.06	612.32	612.30		
LAT. 'O-3'																				
5.00	0.00	5.00	O-3	0.12	0.90	0.11	0.11	10.00	8.74	0.9	0.0001	18	0.53	0.16	10.16	0.00	612.66	612.66	612.66	
LAT. 'O-4'																				
22.00	0.00	22.00	O-4	0.14	0.90	0.13	0.13	10.00	8.74	1.1	0.0001	18	0.62	0.59	10.59	0.01	612.74	612.73	612.74	
LAT. 'O-5'																				
5.00	0.00	5.00	O-5	0.20	0.90	0.18	0.18	10.00	8.74	1.6	0.0002	18	0.89	0.09	10.09	0.01	613.77	613.77	613.78	
LAT. 'O-6'																				
22.00	0.00	22.00	O-6	0.18	0.90	0.16	0.16	10.00	8.74	1.4	0.0002	18	0.80	0.46	10.46	0.01	613.80	613.80	613.81	
LAT. 'O-7'																				
43.00	0.00	43.00	O-7	1.02	0.79	0.81	0.81	10.00	8.74	7.0	0.0045	18	3.99	0.18	10.18	0.25	613.78	613.59		
LAT. 'O-8'																				
25.00	0.00	25.00	O-8	0.75	0.90	0.68	0.68	10.00	8.74	5.9	0.0032	18	3.34	0.12	10.12	0.17	613.79	613.71		

STORM SEWER CALCULATIONS

COLLECTION POINT INLETS OR MANHOLES UPSTREAM STATION	DOWNSTREAM STATION	DISTANCE BETWEEN COLLECTION POINTS	INCREMENTAL DRAINAGE AREA INCREM. AREA NO.	AREA "A" (ACRES)	RUNOFF COEFF. "C"	INCREM. "CA"	ACCUM. "CA"	TIME @ UPSTREAM STATION (MIN.)	INTENSITY "I-100" (IN./HR)	100 YR. STORM RUNOFF "Q"	SLOPE OF HYDRAULIC GRADIENT (FT./FT.)	STORM SEWER SIZE	VELOCITY "V" (F.P.S.)	FLOW TIME IN SEWER (MIN.)	TIME @ DOWNSTREAM STATION (MIN.)	VELOCITY HEAD (FEET)	HYDRAULIC GRADE AT UPSTREAM STATION	HYDRAULIC GRADE AT DOWNSTREAM STATION	HYDRAULIC GRADE AT INLETS	COMMENTS
LINE 'T'																				
531.32	361.00	170.32	EXIST.	18.28	0.90	16.45	16.45	10.00	8.74	143.8	0.0002	48	5.72	0.50	10.50	0.51	615.58	615.54		Double 48" RCP
361.00	349.00	12.00	T-4	0.35	0.90	0.32	16.77	10.50	8.61	144.4	0.0003	48	5.75	0.03	10.53	0.51	615.53	615.53		Double 48" RCP
349.00	159.41	189.59	T-3	0.38	0.90	0.34	17.11	10.53	8.61	147.2	0.0003	48	5.86	0.54	11.07	0.53	615.51	615.46		Double 48" RCP
LAT. T-1'																				
47.00	0.00	47.00	T-1	2.70	0.90	2.43	2.43	10.00	8.74	21.2	0.0180	21	8.83	0.09	10.09	1.21	612.60	611.75		
LAT. T-3'																				
30.00	0.00	30.00	T-3	0.38	0.90	0.34	0.34	10.00	8.74	3.0	0.0008	18	1.69	0.30	10.30	0.04	615.53	615.51	615.59	
LAT. T-4'																				
23.00	0.00	23.00	T-4	0.35	0.90	0.32	0.32	10.00	8.74	2.8	0.0007	18	1.56	0.25	10.25	0.04	615.55	615.53	615.60	
LINE U																				
783.85	755.00	28.85	LINE T & LAT T-1	21.71	0.90	19.54	19.54	10.53	8.61	168.1	0.0067	1'X3' RCB	9.34	0.05	10.58	1.35	610.92	610.73		
755.00	285.00	470.00	LAT U-1	1.26	0.90	1.13	20.67	10.58	8.59	177.6	0.0075	1'X3' RCB	9.87	0.79	11.38	1.51	610.57	607.07		
285.00	50.00	235.00	U-2	5.23	0.90	4.71	25.38	11.38	8.40	213.2	0.0047	1'X4' RCB	8.88	0.44	11.82	1.23	607.21	606.10		
LAT. U-1'																				
50.00	0.00	50.00	U-1	1.26	0.90	1.13	1.13	10.00	8.74	9.9	0.0039	21	4.12	0.20	10.20	0.26	610.77	610.57		

STORM SEWER CALCULATIONS

COLLECTION POINT INLETS OR MANHOLES UPSTREAM STATION	DOWNSTREAM STATION	DISTANCE BETWEEN COLLECTION POINTS	INCREMENTAL DRAINAGE AREA INCREM. AREA NO.	AREA "A" (ACRES)	RUNOFF COEFF. "C"	INCREM. "CA"	ACCUM. "CA"	TIME @ UPSTREAM STATION (MIN.)	INTENSITY "I-100" (IN./HR)	100 YR. STORM RUNOFF "Q"	SLOPE OF HYDRAULIC GRADIENT (FT./FT.)	STORM SEWER SIZE	VELOCITY "V" (F.P.S.)	FLOW TIME IN SEWER (MIN.)	TIME @ DOWNSTREAM STATION (MIN.)	VELOCITY HEAD (FEET)	HYDRAULIC GRADE AT UPSTREAM STATION	HYDRAULIC GRADE AT DOWNSTREAM STATION	HYDRAULIC GRADE AT INLETS	COMMENTS
LINE 'L'																				
1378.00	1273.00	105.00	L-14	2.24	0.90	2.02	2.02	10.78	8.54	17.3	0.0031	27	4.34	0.40	11.18	0.29	613.25	612.92		
1273.00	1232.15	40.85	L-13	0.21	0.90	0.19	2.21	11.18	8.44	18.7	0.0036	27	4.69	0.15	11.33	0.34	612.87	612.72		
1232.15	982.00	250.15	LINE O	3.61	0.90	3.25	5.46	11.33	8.41	45.9	0.0047	36	6.49	0.64	11.97	0.65	612.41	611.23		
982.00	969.00	13.00	L-12	0.30	0.90	0.27	5.73	11.97	8.26	47.3	0.0050	36	6.70	0.03	12.00	0.70	611.19	611.12		
969.00	941.37	27.63	L-11 &L-10	1.63	0.90	1.47	7.20	12.00	8.26	59.4	0.0079	36	8.40	0.05	12.05	1.10	610.72	610.50		
941.37	698.00	243.37	LINE N	3.96	0.90	3.56	10.76	12.05	8.24	88.7	0.0078	42	9.22	0.44	12.50	1.32	610.28	608.39		
698.00	619.00	79.00	L-9	0.30	0.90	0.27	11.03	12.50	8.15	89.9	0.0080	42	9.34	0.14	12.64	1.35	608.35	607.72		
619.00	506.00	113.00	L-7 & L-8	2.16	0.90	1.94	12.97	12.64	8.12	105.3	0.0110	42	10.95	0.17	12.81	1.86	607.21	605.98		
506.00	474.16	31.84	L-6	0.19	0.90	0.17	13.14	12.81	8.08	106.2	0.0111	42	11.04	0.05	12.86	1.89	605.94	605.59		
474.16	447.54	26.62	L-5	1.21	0.90	1.09	14.23	12.86	8.07	114.9	0.0130	42	11.94	0.04	12.90	2.21	605.27	604.92		
447.54	340.44	107.10	LINE M	4.22	0.90	3.80	18.03	12.90	8.06	145.4	0.0055	54	9.14	0.20	13.09	1.30	605.38	604.79		
340.44	320.04	20.40	L-4	0.27	0.90	0.24	18.27	13.09	8.02	146.6	0.0056	54	9.22	0.04	13.13	1.32	604.77	604.66		
320.04	296.00	24.04	L-3	0.40	0.90	0.36	18.63	13.13	8.02	149.4	0.0058	54	9.39	0.04	13.17	1.37	604.61	604.47		
296.00	253.85	42.15	L-2	1.96	0.90	1.76	20.40	13.17	8.01	163.4	0.0069	54	10.27	0.07	13.24	1.64	604.20	603.91		
253.85	206.00	47.85	L-1	0.49	0.90	0.44	20.84	13.24	7.99	166.6	0.0072	54	10.48	0.08	13.31	1.70	603.84	603.50		
206.00	106.00	100.00	LINE S	0.72	0.90	0.65	21.49	13.31	7.98	171.4	0.0076	54	10.78	0.15	13.47	1.80	603.40	602.64		
LAT. 'L-7'																				
16.00	0.00	16.00	L-7	0.31	0.90	0.28	0.28	10.00	8.74	2.4	0.0005	18	1.38	0.19	10.19	0.03	607.40	607.39		
LAT. 'L-8'																				
54.00	31.00	23.00	L-8	1.85	0.90	1.67	1.67	10.00	8.74	14.6	0.0041	24	4.63	0.08	10.08	0.33	607.60	607.51	608.02	
31.00	0.00	31.00	L-7	0.31	0.90	0.28	1.94	10.08	8.72	17.0	0.0056	24	5.40	0.10	10.18	0.45	607.39	607.21		
LAT 'L-8A, L-9'																				
56.00	33.00	23.00	L-9	0.30	0.90	0.27	0.27	10.00	8.74	2.4	0.0005	18	1.34	0.29	10.29	0.03	609.44	609.43	609.47	
33.00	0.00	33.00	N-1	1.21	0.90	1.09	1.36	10.29	8.67	11.8	0.0126	18	6.67	0.08	10.37	0.69	608.77	608.35		
LAT. 'L-10'																				
54.00	49.00	5.00	L-11	0.44	0.90	0.40	0.40	10.00	8.74	3.5	0.0005	21	1.44	0.06	10.06	0.03	611.45	611.45		
49.00	0.00	49.00	L-10	1.19	0.90	1.07	1.47	10.06	8.73	12.8	0.0065	21	5.32	0.15	10.21	0.44	611.04	610.72		
LAT. 'L-11'																				
22.00	0.00	22.00	L-11	0.44	0.90	0.40	0.40	10.00	8.74	3.5	0.0011	18	1.96	0.19	10.19	0.06	611.06	611.04	611.14	
LAT. 'L-12'																				
31.18	0.00	31.18	L-12	0.30	0.90	0.27	0.27	10.00	8.74	2.4	0.0005	18	1.34	0.39	10.39	0.03	611.20	611.19	611.24	
LAT. 'L-13'																				
31.24	0.00	31.24	L-13	0.21	0.90	0.19	0.19	10.00	8.74	1.7	0.0002	18	0.94	0.56	10.56	0.01	612.88	612.87	612.90	
LAT. 'L-14'																				
39.54	0.00	39.54	L-14	2.24	0.90	2.02	2.02	10.00	8.74	17.6	0.0032	27	4.43	0.15	10.15	0.31	613.38	613.25		

STORM WATER RUNOFF CALCULATIONS

AREA NO.	Tc (MIN.)	INTENSITY "I-100" (IN./HR)	RUNOFF COEFF. "C"	AREA "A" (ACRES)	STORM RUNOFF "Q-100"
A-1	10.00	8.74	0.90	0.13	1.02
A-2	10.00	8.74	0.90	0.13	1.02
A-3	10.00	8.74	0.90	0.88	6.92
A-4	10.00	8.74	0.90	0.29	2.28
A-5	10.00	8.74	0.90	0.29	2.28
A-6	10.00	8.74	0.90	0.31	2.44
A-7	10.00	8.74	0.90	0.36	2.83
A-8	10.00	8.74	0.50	0.34	1.49
A-9	10.00	8.74	0.90	0.30	2.36
A-10	10.00	8.74	0.50	0.62	2.71
A-11	10.00	8.74	0.90	0.18	1.42
A-12	10.00	8.74	0.90	0.16	1.26
A-13.1	10.00	8.74	0.90	0.32	2.52
A-13.2	10.00	8.74	0.90	0.69	5.43
A-13.3	10.00	8.74	0.90	0.81	6.37
A-14	10.00	8.74	0.90	0.15	1.18
A-15	10.00	8.74	0.90	1.11	8.73
A-16	10.00	8.74	0.90	0.65	5.11
B-12	10.00	8.74	0.90	0.34	2.67
C-1	10.00	8.74	0.90	0.58	4.56
D-1	10.00	8.74	0.90	0.50	3.93
D-2	10.00	8.74	0.90	0.49	3.85
D-3	10.00	8.74	0.90	0.54	4.25
J-1	10.00	8.74	0.90	0.61	4.80
J-2	10.00	8.74	0.90	1.27	9.99
J-3	10.00	8.74	0.90	0.34	2.67
L-1	10.00	8.74	0.90	0.49	3.85
L-2	10.00	8.74	0.90	1.96	15.42
L-3	10.00	8.74	0.90	0.40	3.15
L-4	10.00	8.74	0.90	0.27	2.12
L-5	10.00	8.74	0.90	1.21	9.52
L-6	10.00	8.74	0.90	0.19	1.49
L-7	10.00	8.74	0.90	0.31	2.44
L-8	10.00	8.74	0.90	1.85	14.55
L-9	10.00	8.74	0.90	0.30	2.36
L-10	10.00	8.74	0.90	1.19	9.36
L-11	10.00	8.74	0.90	0.44	3.46
L-12	10.00	8.74	0.90	0.30	2.36
L-13	10.00	8.74	0.90	0.21	1.65
L-14	10.00	8.74	0.90	2.24	17.62
M-1	10.00	8.74	0.90	0.36	2.83
M-2	10.00	8.74	0.90	0.12	0.94
M-3	10.00	8.74	0.90	0.37	2.91
M-4	10.00	8.74	0.90	0.53	4.17
M-5	10.00	8.74	0.90	1.04	8.18
M-6	10.00	8.74	0.90	1.37	10.78
M-7	10.00	8.74	0.90	0.11	0.87
M-8	10.00	8.74	0.90	0.32	2.52

AREA NO.	Tc (MIN.)	INTENSITY "I-100" (IN./HR)	RUNOFF COEFF. "C"	AREA "A" (ACRES)	STORM RUNOFF "Q-100"
N-1	10.00	8.74	0.90	3.91	30.76
O-1	10.00	8.74	0.90	0.76	5.98
O-2	10.00	8.74	0.90	0.44	3.46
O-3	10.00	8.74	0.90	0.12	0.94
O-4	10.00	8.74	0.90	0.14	1.10
O-5	10.00	8.74	0.90	0.20	1.57
O-6	10.00	8.74	0.90	0.18	1.42
O-7	10.00	8.74	0.90	1.02	8.02
O-8	10.00	8.74	0.90	0.75	5.90
Q-1	10.00	8.74	0.90	1.62	12.74
Q-2	10.00	8.74	0.90	1.79	14.08
Q-3	10.00	8.74	0.90	0.61	4.80
Q-4	10.00	8.74	0.90	0.12	0.94
Q-5	10.00	8.74	0.90	0.14	1.10
Q-6	10.00	8.74	0.90	0.19	1.49
Q-7	10.00	8.74	0.90	0.19	1.49
R-1	10.00	8.74	0.90	0.38	2.99
R-2	10.00	8.74	0.90	1.73	13.61
R-3	10.00	8.74	0.90	0.38	2.99
R-4	10.00	8.74	0.90	1.80	14.16
R-5	10.00	8.74	0.90	1.26	9.91
R-6	10.00	8.74	0.90	0.13	1.02
R-7	10.00	8.74	0.90	0.24	1.89
R-8	10.00	8.74	0.90	0.17	1.34
S-1	10.00	8.74	0.90	0.15	1.18
S-2	10.00	8.74	0.90	0.11	0.87
S-3	10.00	8.74	0.90	0.29	2.28
S-4	10.00	8.74	0.90	0.17	1.34
T-1	10.00	8.74	0.90	2.70	21.24
T-2	10.00	8.74	0.90	1.26	9.91
T-3	10.00	8.74	0.90	0.38	2.99
T-4	10.00	8.74	0.90	0.35	2.75
U-1	10.00	8.80	0.90	5.23	41.42

STATE OF TEXAS
DAVID E. MEYERS
81512
REGISTERED PROFESSIONAL ENGINEER
1/5/04

DATE	DESCRIPTION	REF NO.
1/05/04	ISSUED FOR CONSTRUCTION	
11/07/03	ISSUED FOR BID	

DRAINAGE CALCULATIONS

SPECTRUM DRIVE EXTENSION

TOWN OF ADDISON, TEXAS

Huitt - Zollars, Inc.
3131 Mckinney Ave., Suite 600, Dallas, TX 75204
Phone (214) 871-3311/Fax (214) 871-0757

DESIGN	DRAWN	APPR.	SCALE	DATE	PROJECT NO.	NO.
HZI	HZI	DEM	NONE	AUG 2003	01-3220-01	17

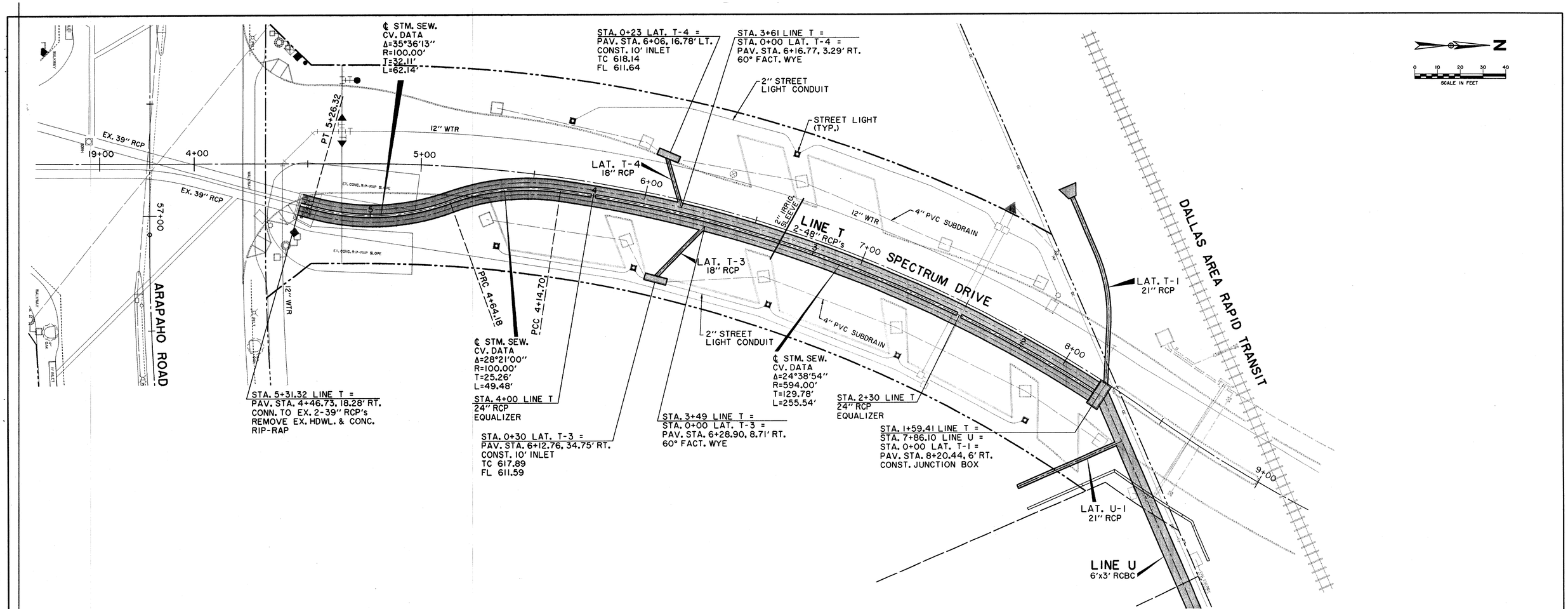

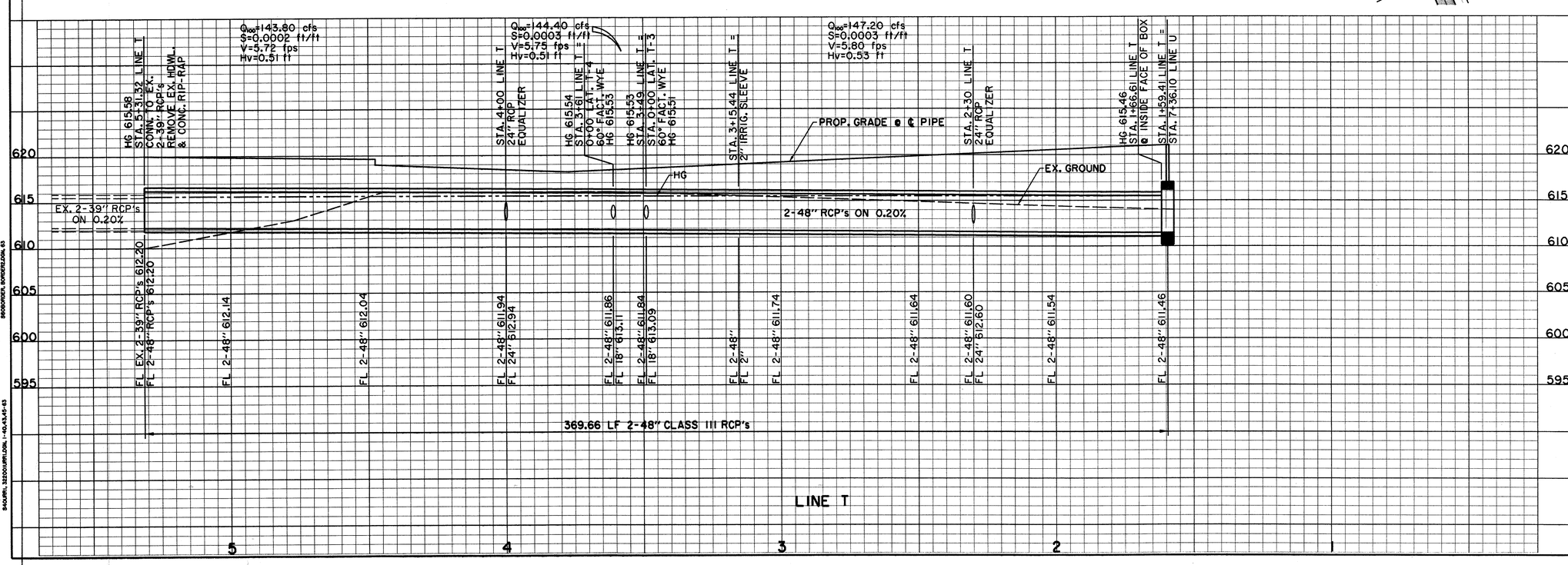

BENCHMARKS:

"□" CUT SOUTHWEST CORNER OF CURB INLET, WEST SIDE OF SPECTRUM DRIVE, ±30' NORTH OF MORRIS AVENUE.
ELEV. 611.84

"X" CUT ON CONC. TOP OF CURB OF MEDIAN NOSE ON SPECTRUM DRIVE AT INTERSECTION OF McENTIRE PLACE.
ELEV. 619.30

STATE OF TEXAS
DAVID E. MEYERS
81512
REGISTERED PROFESSIONAL ENGINEER
1/5/04

DATE	DESCRIPTION	REF NO.
1/05/04	ISSUED FOR CONSTRUCTION	
11/07/03	ISSUED FOR BID	

DRAINAGE PLAN & PROFILE
LINE T STA. 1+59.41 TO STA. 5+31.32

SPECTRUM DRIVE EXTENSION

TOWN OF ADDISON, TEXAS

Huitt - Zollars, Inc.
3131 Mckinney Ave., Suite 600, Dallas, TX 75204
Phone (214) 871-3311/Fax (214) 871-0757

DESIGN	DRAWN	APPR.	SCALE	DATE	PROJECT NO.	NO.
HZI	HZI	DEM	H: 1"=20' V: 1"=6'	NOV 2003	01-3220-01	18

h:\proj\01322001\dgn\32200iud05.DGN

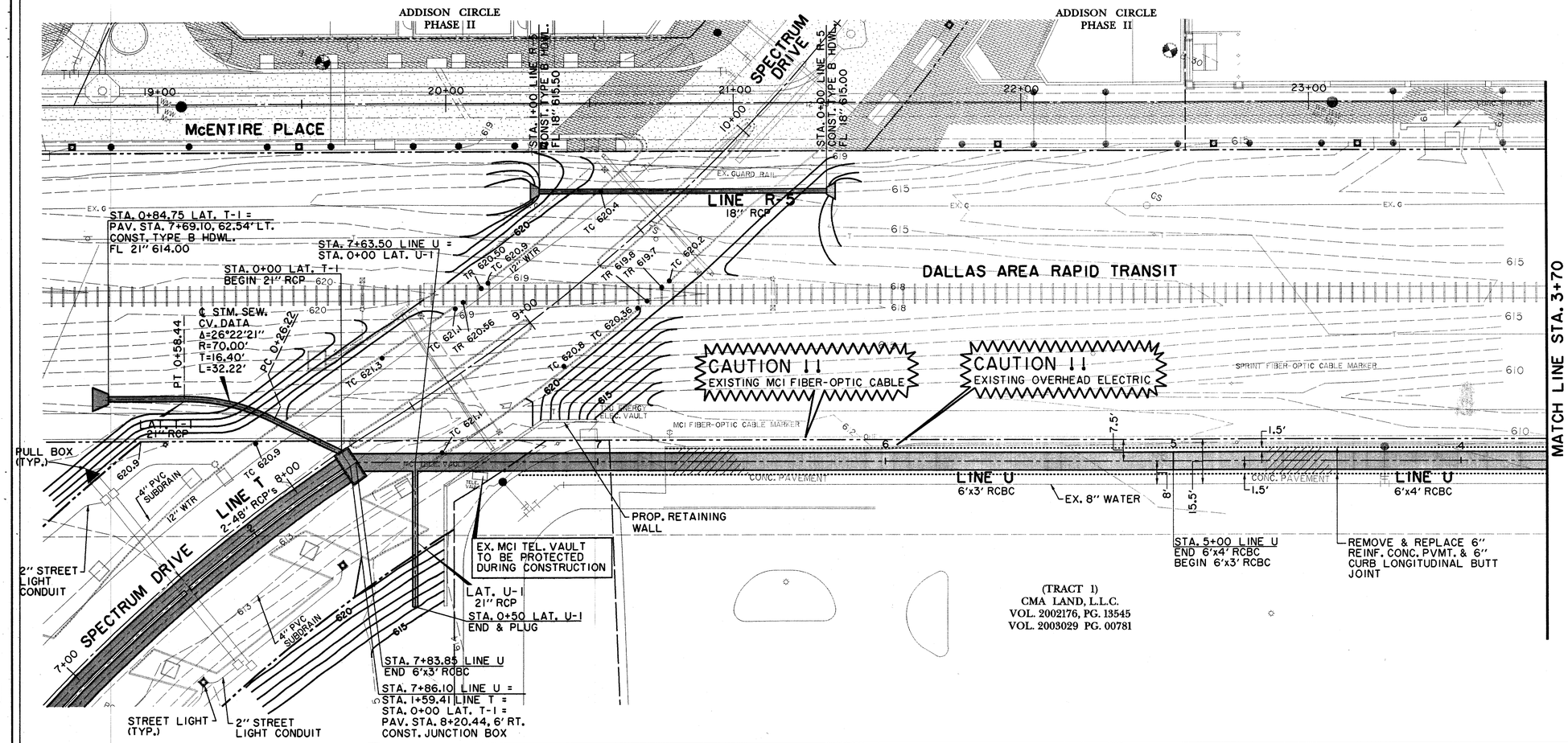

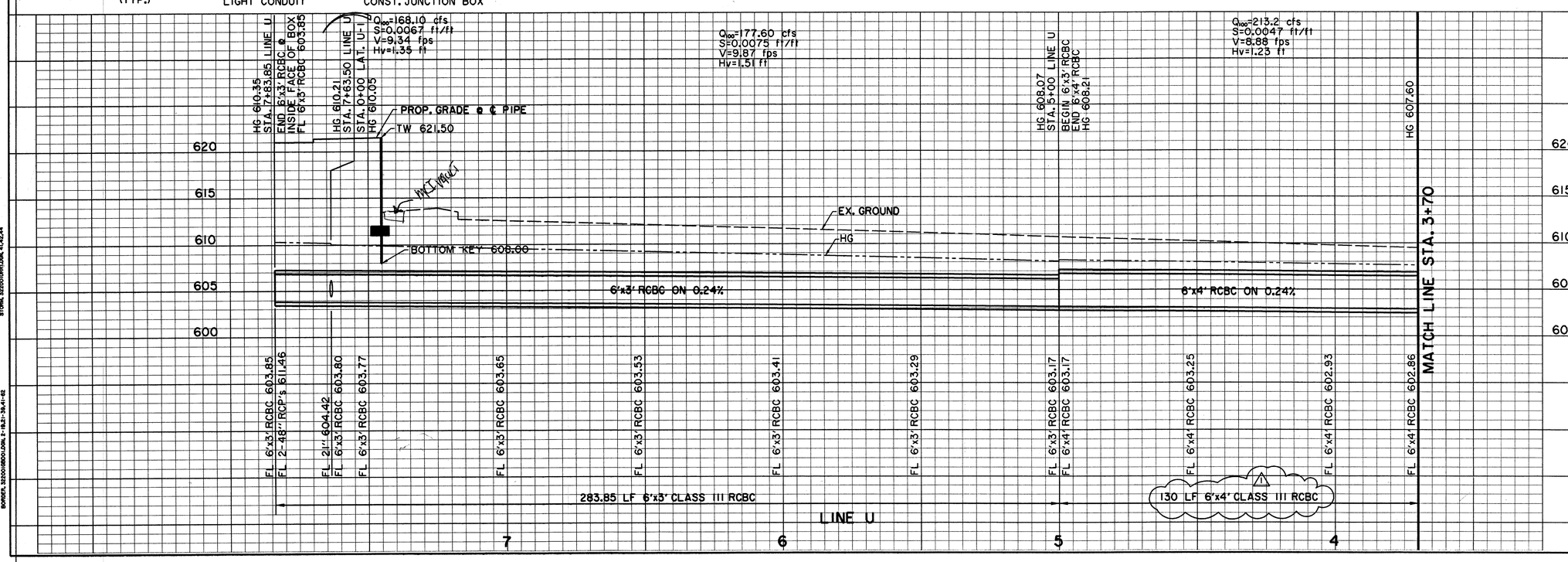

BENCHMARKS:

"□" CUT SOUTHWEST CORNER OF CURB INLET, WEST SIDE OF SPECTRUM DRIVE, ±30' NORTH OF MORRIS AVENUE. ELEV. 611.84

"X" CUT ON CONC. TOP OF CURB OF MEDIAN NOSE ON SPECTRUM DRIVE AT INTERSECTION OF McENTIRE PLACE. ELEV. 619.30

STATE OF TEXAS — DAVID E. MEYERS 81512 — REGISTERED PROFESSIONAL ENGINEER — 11/5/04

DATE	DESCRIPTION	REF NO.
1/05/04	ISSUED FOR CONSTRUCTION	
11/11/03	REVISED 6'x4' RCBC LIMITS	1
11/07/03	ISSUED FOR BID	

DRAINAGE PLAN & PROFILE
LINE U STA. 3+70 TO STA. 7+83.85
SPECTRUM DRIVE EXTENSION

TOWN OF ADDISON, TEXAS

Huitt - Zollars, Inc.
3131 Mckinney Ave., Suite 600, Dallas, TX 75204
Phone (214) 871-3311/Fax (214) 871-0757

DESIGN	DRAWN	APPR.	SCALE	DATE	PROJECT NO.	NO.
HZI	HZI	DEM	H: 1"=20' V: 1"=6'	NOV 2003	01-3220-01	19

h:\proj\01322001\dgn\322001UD06.DGN

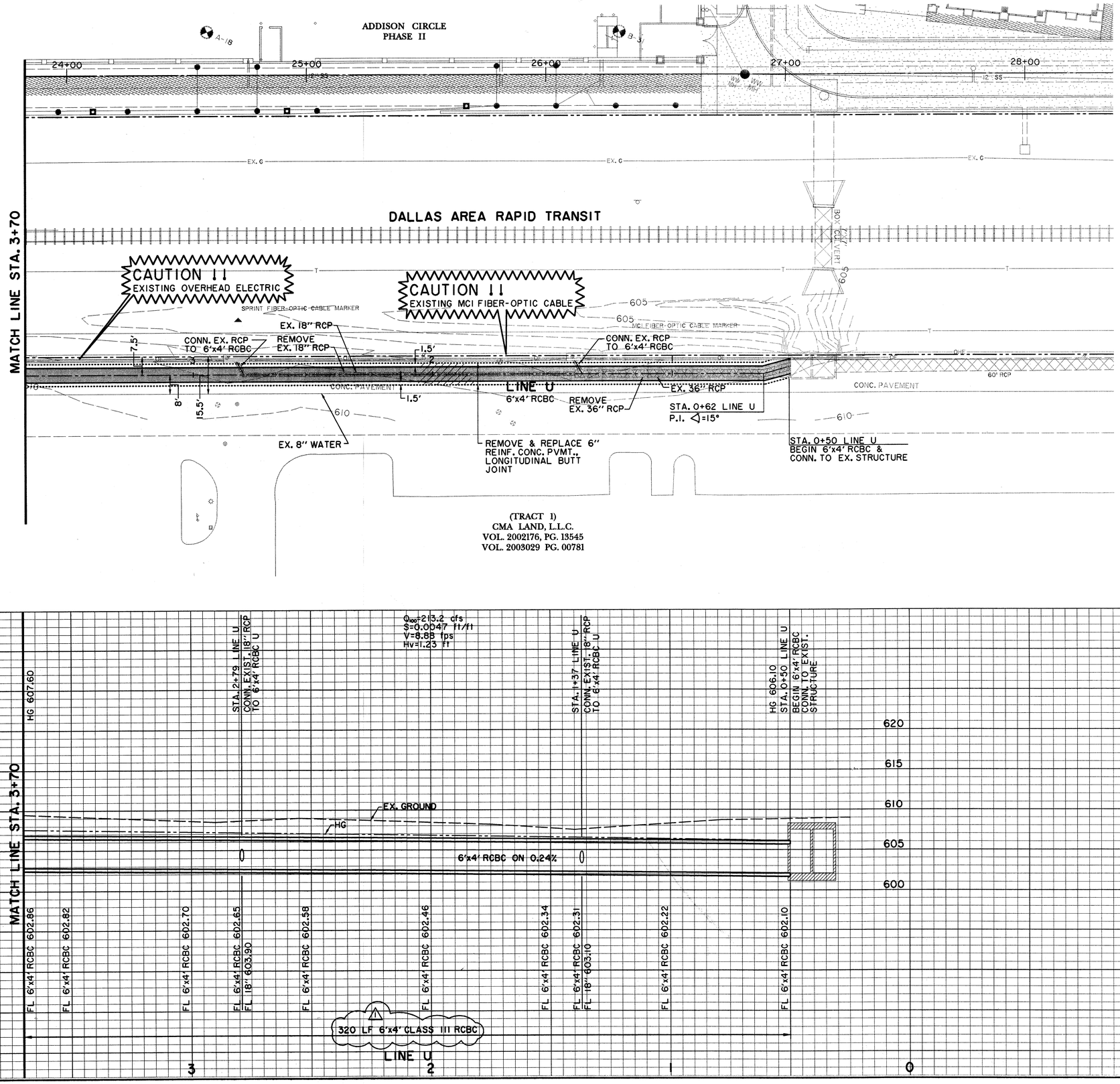

BENCHMARKS:

"□" CUT SOUTHWEST CORNER OF CURB INLET, WEST SIDE OF SPECTRUM DRIVE, ±30' NORTH OF MORRIS AVENUE.
ELEV. 611.84

"X" CUT ON CONC. TOP OF CURB OF MEDIAN NOSE ON SPECTRUM DRIVE AT INTERSECTION OF McENTIRE PLACE.
ELEV. 619.30

STATE OF TEXAS
DAVID E. MEYERS
81512
REGISTERED PROFESSIONAL ENGINEER
1/5/04

DATE	DESCRIPTION	REF NO.
1/05/04	ISSUED FOR CONSTRUCTION	
11/11/03	REVISED 6'x4' RCBC LIMITS	1
11/07/03	ISSUED FOR BID	

DRAINAGE PLAN & PROFILE
LINE U STA. 0+50 TO STA. 3+70
SPECTRUM DRIVE EXTENSION

TOWN OF ADDISON, TEXAS

Huitt - Zollars, Inc.
3131 Mckinney Ave., Suite 600, Dallas, TX 75204
Phone (214) 871-3311/Fax (214) 871-0757

DESIGN	DRAWN	APPR.	SCALE	DATE	PROJECT NO.	NO.
HZI	HZI	DEM		NOV 2003	01-3220-01	20

ht \proj\01322001\dgn\32200IUD07.DGN

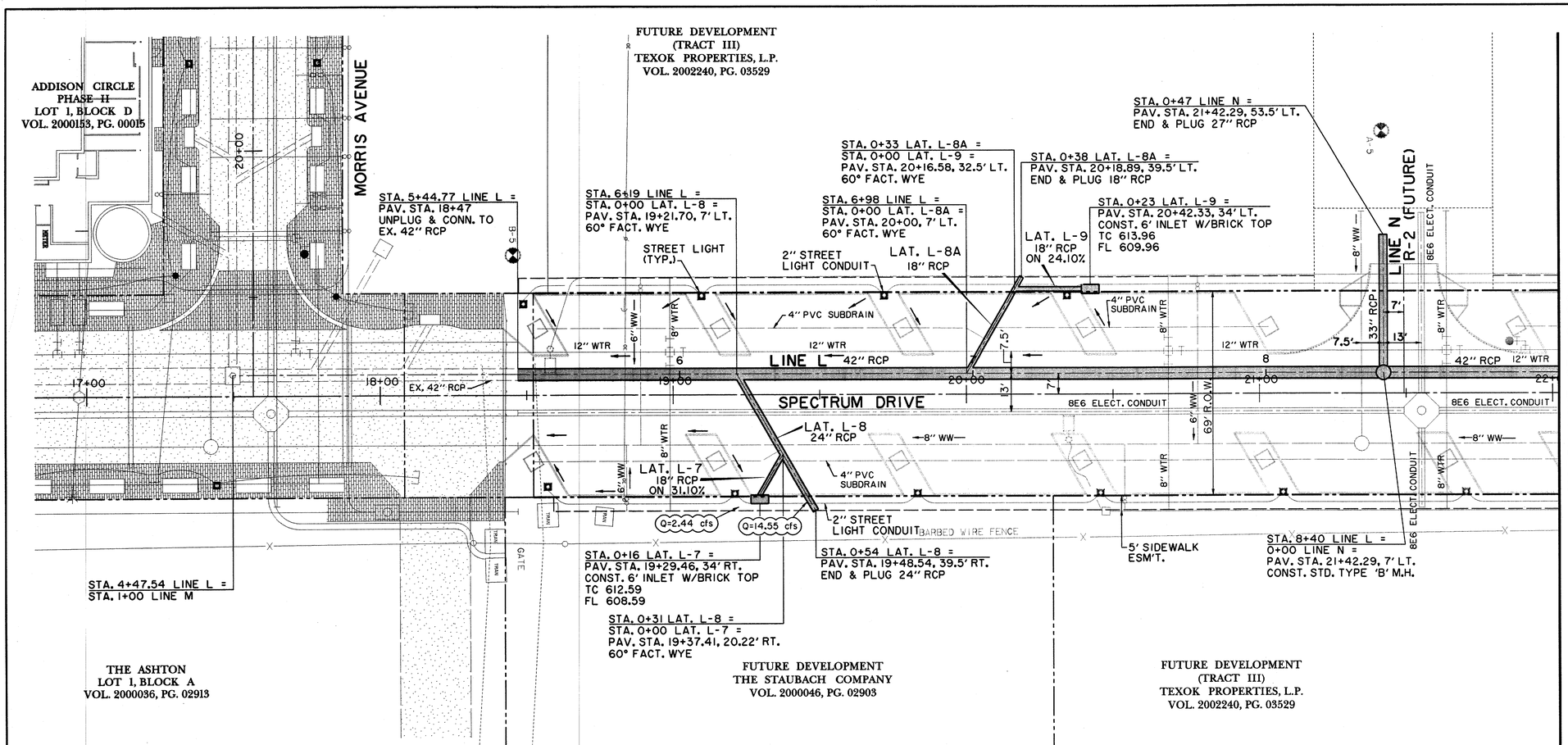

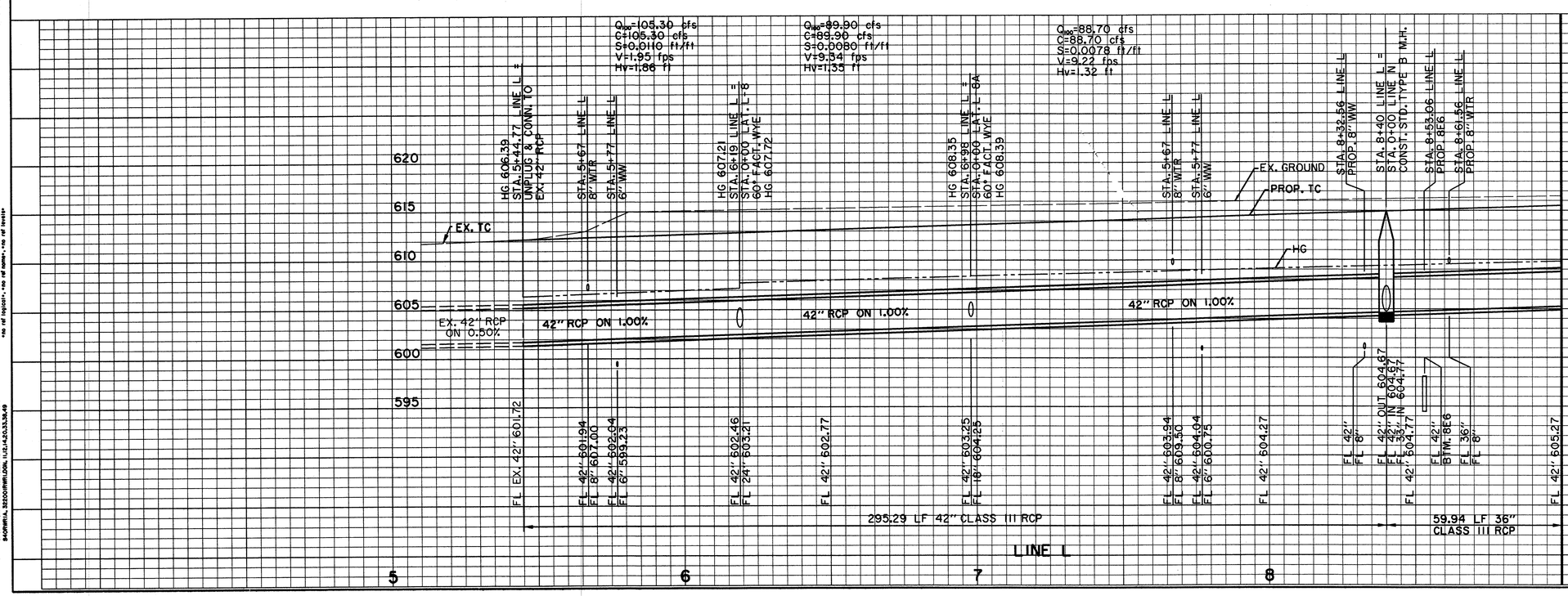

BENCHMARKS:

"□" CUT SOUTHWEST CORNER OF CURB INLET, WEST SIDE OF SPECTRUM DRIVE, ±30' NORTH OF MORRIS AVENUE.
ELEV. 611.84

"□" CUT ON TOP EAST END OF CURB INLET ON NORTH SIDE OF MORRIS AVENUE AND ±150' EAST OF QUORUM DRIVE CENTERLINE.
ELEV. 616.39

STATE OF TEXAS
DAVID E. MEYERS
81512
REGISTERED PROFESSIONAL ENGINEER
11/10/04

DATE	DESCRIPTION	REF NO.
1/05/04	ISSUED FOR CONSTRUCTION	
11/07/03	ISSUED FOR BID	

DRAINAGE PLAN & PROFILE
LINE L STA. 5+44.77 TO STA. 9+00

SPECTRUM DRIVE EXTENSION

TOWN OF ADDISON, TEXAS

Huitt - Zollars, Inc.
3131 Mckinney Ave., Suite 600, Dallas, TX 75204
Phone (214) 871-3311/Fax (214) 871-0757

DESIGN	DRAWN	APPR.	SCALE	DATE	PROJECT NO.	NO.
HZI	HZI	DEM	H: 1"=20' V: 1"=6'	NOV 2003	01-3220-01	21

h:\proj\01322001\dgn\32200101D01.DGN

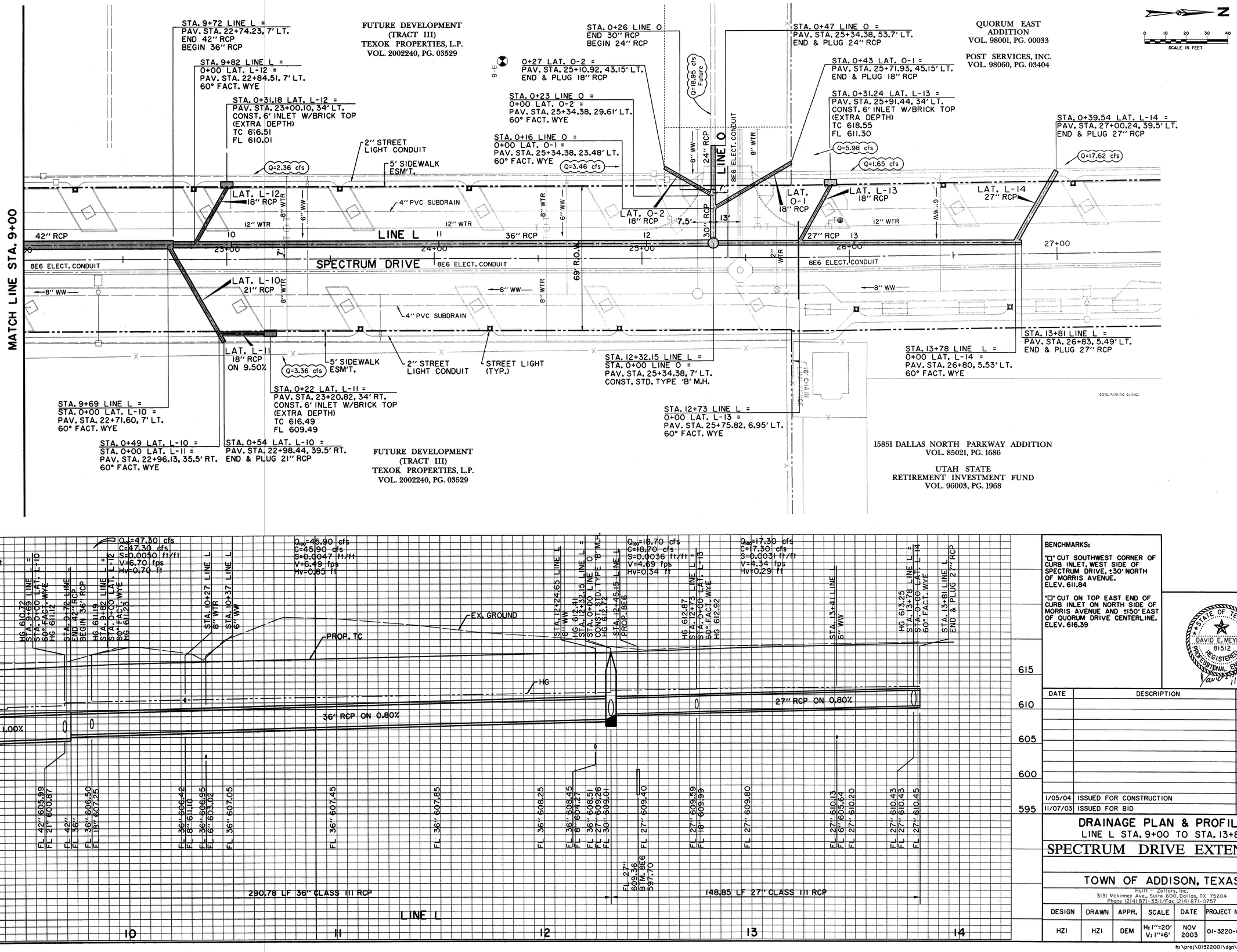

BENCHMARKS:

"□" CUT SOUTHWEST CORNER OF CURB INLET, WEST SIDE OF SPECTRUM DRIVE, ±30' NORTH OF MORRIS AVENUE.
ELEV. 611.84

"□" CUT ON TOP EAST END OF CURB INLET ON NORTH SIDE OF MORRIS AVENUE AND ±150' EAST OF QUORUM DRIVE CENTERLINE.
ELEV. 616.39

STATE OF TEXAS
DAVID E. MEYERS
81512
REGISTERED
PROFESSIONAL ENGINEER
1/5/04

DATE	DESCRIPTION	REF NO.
1/05/04	ISSUED FOR CONSTRUCTION	
11/07/03	ISSUED FOR BID	

DRAINAGE PLAN & PROFILE
LINE L STA. 9+00 TO STA. 13+81

SPECTRUM DRIVE EXTENSION

TOWN OF ADDISON, TEXAS

Huitt - Zollars, Inc.
3131 Mckinney Ave., Suite 600, Dallas, TX 75204
Phone (214) 871-3311/Fax (214) 871-0757

DESIGN	DRAWN	APPR.	SCALE	DATE	PROJECT NO.	NO.
HZI	HZI	DEM	H: 1"=20' V: 1"=6'	NOV 2003	01-3220-01	22

h:\proj\01322001\dgn\32200IUD02.DGN

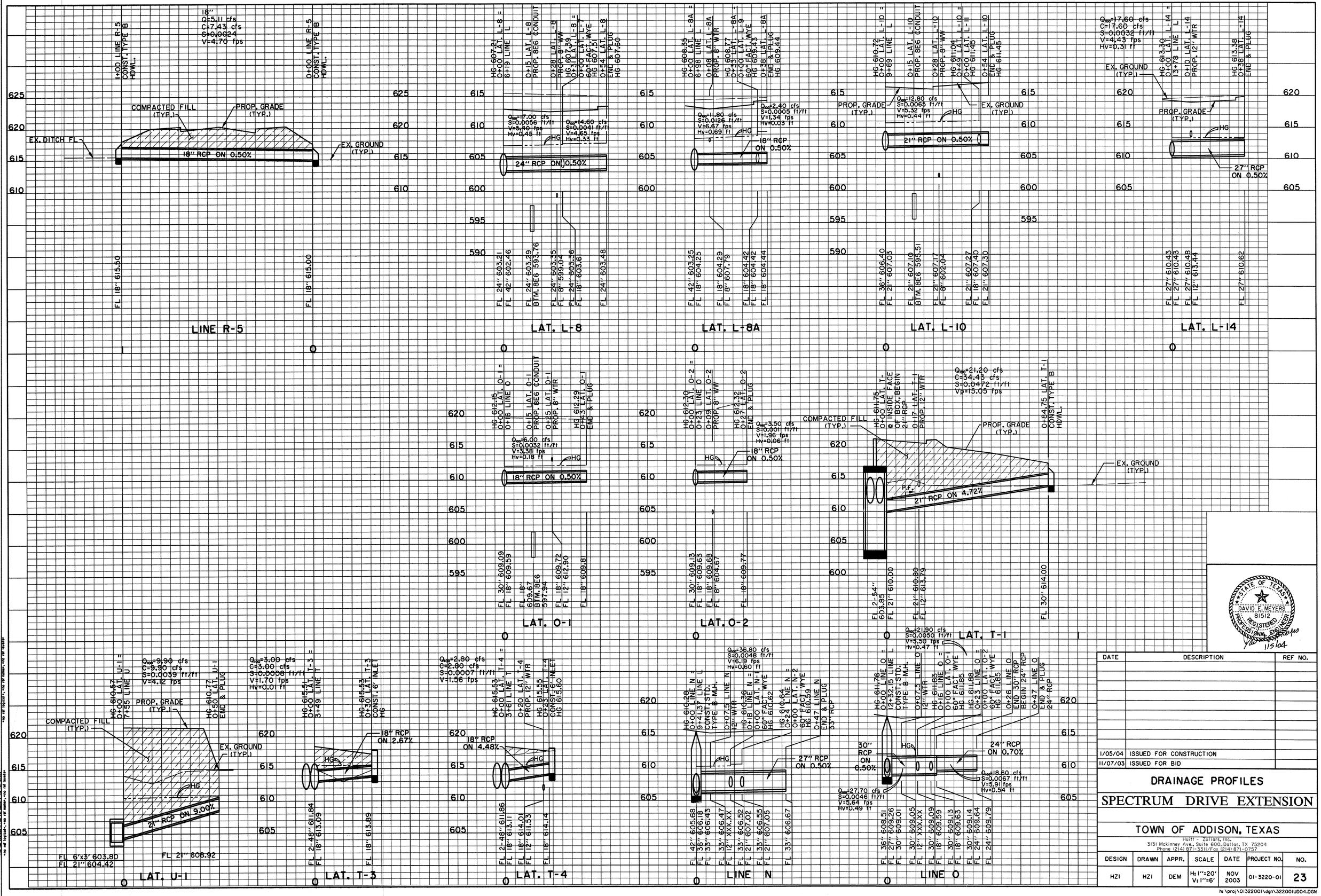

DATE	DESCRIPTION	REF NO.
1/05/04	ISSUED FOR CONSTRUCTION	
11/07/03	ISSUED FOR BID	

DRAINAGE PROFILES

SPECTRUM DRIVE EXTENSION

TOWN OF ADDISON, TEXAS

Huitt - Zollars, Inc.
3131 Mckinney Ave., Suite 600, Dallas, TX 75204
Phone (214) 871-3311/Fax (214) 871-0757

DESIGN	DRAWN	APPR.	SCALE	DATE	PROJECT NO.	NO.
HZI	HZI	DEM	H: 1"=20' V: 1"=6'	NOV 2003	01-3220-01	23

h:\proj\01322001\dgn\32200IUD04.DGN

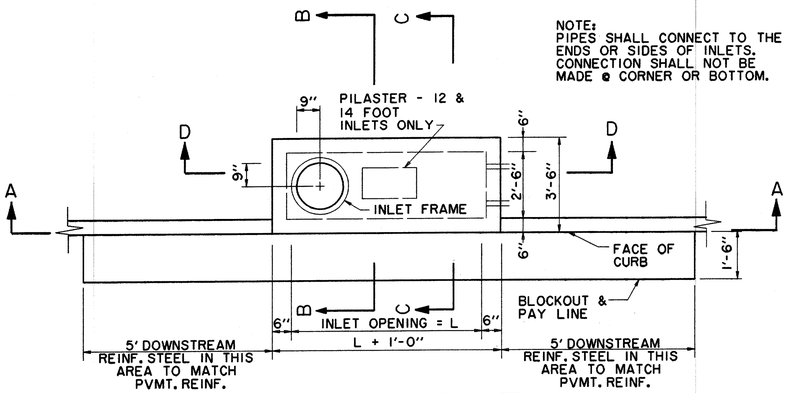

PLAN - STANDARD INLET
N.T.S.

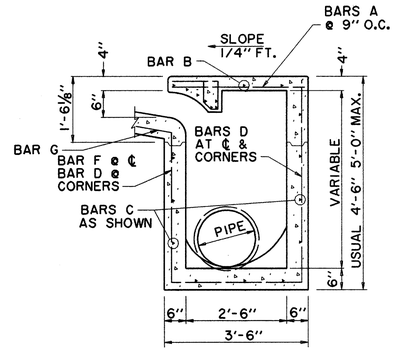

SECTION B-B
6' & 8' INLETS
N.T.S.

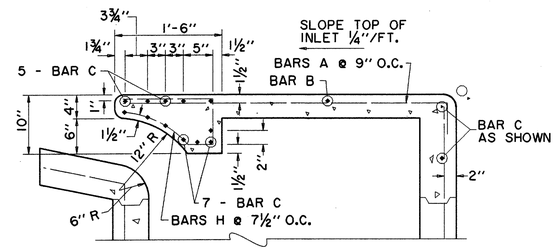

SECTION C-C - DETAIL
6' & 8' INLETS
N.T.S.

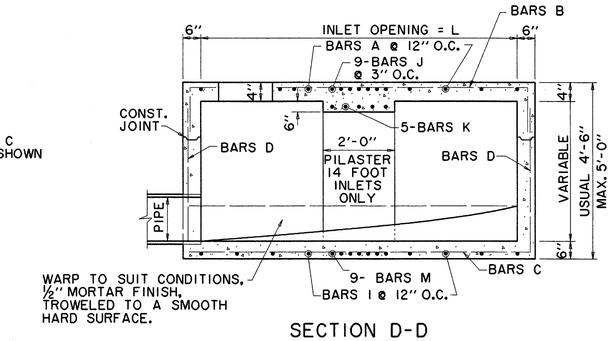

SECTION D-D
14' INLET
N.T.S.

NOTE:
ALL INLET & MANHOLE WALLS SHALL BE FORMED. POORING AGAINST EXPOSED EARTH WILL NOT BE PERMITTED.

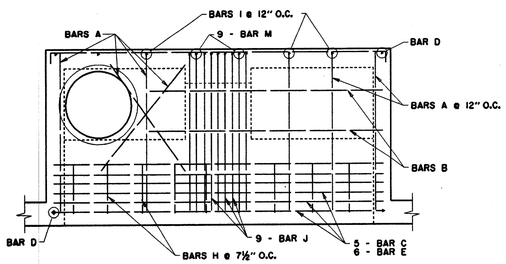

INLET PLAN
N.T.S.

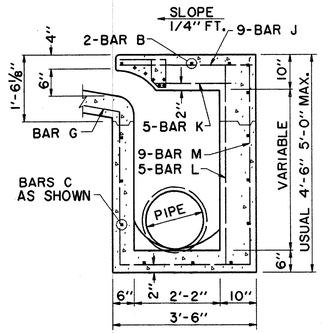

SECTION B-B
10' & 14' INLETS
N.T.S.

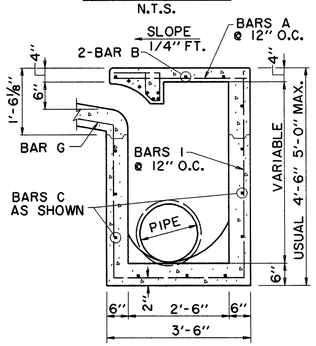

SECTION C-C
10' & 14' INLETS
N.T.S.

NOTE:
PIPES SHALL CONNECT TO THE ENDS OR SIDES OF INLETS. CONNECTION SHALL NOT BE MADE AT CORNER OR BOTTOM.

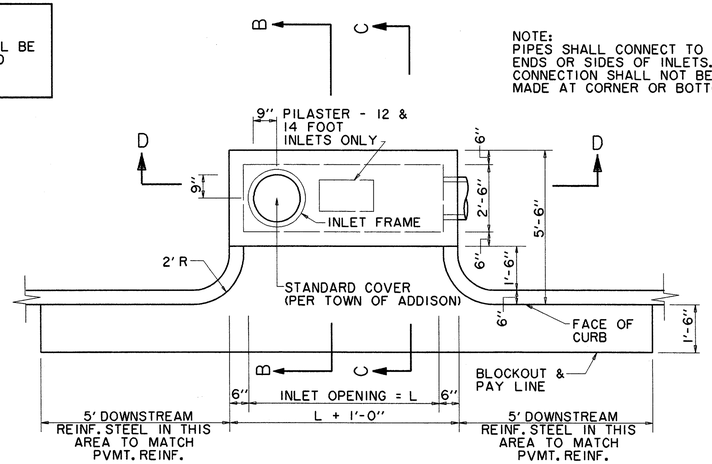

PLAN - MODIFIED RECESSED INLET
N.T.S.

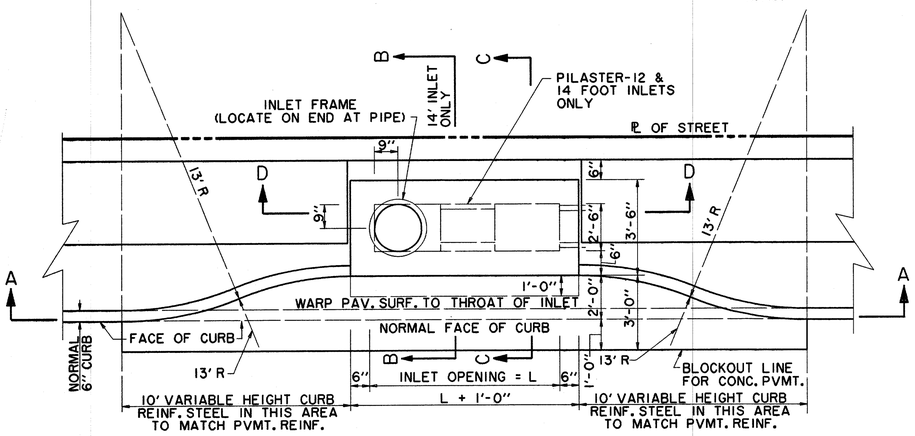

PLAN - RECESSED INLET
N.T.S.

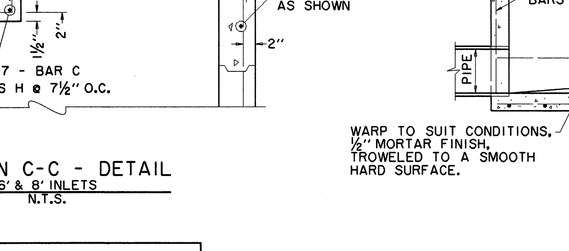

SECTION C-C - DETAIL
10' & 14' INLETS
N.T.S.

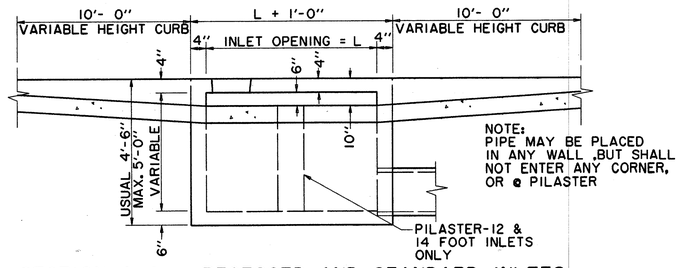

SECTION A-A - RECESSED AND STANDARD INLETS
6, 8, 10 & 14 FOOT INLETS
N.T.S.

REINFORCING STEEL SCHEDULE

DIMENSION SHOWN ARE FOR MAXIMUN SIZE INLETS

INLET LENGHT	BAR TYPE	BAR DIA. (1/8 IN)	NO. REQ'D	BAR DIMENSIONS A	B	C
6	A	3	9	3'-2"	0'-3"	
	B	3	1	4'-10"		
	C	4	15	6'-8"	0'-6"	
	D	4	5	4'-8"		
	F	4	1	3'-2"		
	G	3	5	2'-0"	1'-3"	
	H	6	6	•	•	•
	N	3	3	3'-2"	3'-2"	3'-2"
8	A	3	12	3'-2"	0'-3"	
	B	3	1	6'-10"		
	C	4	15	8'-8"	0'-6"	
	D	4	5	4'-8"		
	F	4	1	3'-2"		
	G	3	5	2'-0"	1'-3"	
	H	6	8	•	•	•
	N	3	3	3'-2"	3'-2"	3'-2"
10	A	3	10	3'-2"	0'-3"	
	B	3	2	8'-10"		
	C	4	16	10'-8"	0'-6"	
	D	4	4	4'-8"		
	E	5	6	10'-8"		
	G	3	5	2'-0"	1'-3"	
	H	3	15	•	•	•
	I	4	8	4'-8"	3'-2"	3'-2"
	L	4	5	4'-3"		
12	A	3	12	3'-2"	0'-3"	
	B	3	2	10'-10"		
	C	4	16	12'-8"	0'-6"	
	D	4	4	4'-8"		
	E	5	6	12'-8"		
	G	3	5	2'-0"	1'-3"	
	H	3	18	•	•	•
	I	4	10	4'-8"	3'-2"	3'-2"
	J	5	9	3'-2"	1'-3"	
	K	4	5	2'-3"		
	L	4	5	4'-3"		
	M	5	9	4'-3"	3'-2"	3'-9"
14	A	3	14	3'-2"	0'-3"	
	B	3	2	10'-10"		
	C	4	16	14'-8"	0'-6"	
	D	4	4	4'-8"		
	E	5	6	14'-8"		
	G	3	5	2'-0"	1'-3"	
	H	3	21	•	•	•
	I	4	12	4'-8"	3'-2"	3'-2"
	J	5	9	3'-2"	1'-3"	
	K	4	5	2'-3"		
	L	4	5	4'-3"		
	M	5	9	4'-3"	3'-2"	3'-9"

• SEE DIAGRAM FOR DIMENSIONS

BAR DIAGRAMS

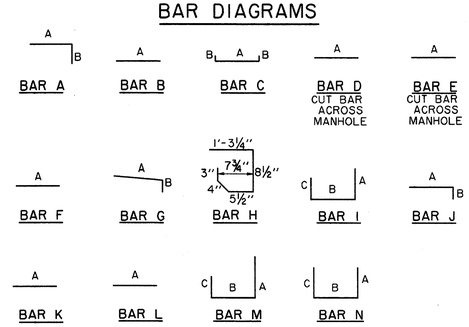

STATE OF TEXAS
DAVID E. MEYERS
81512
REGISTERED PROFESSIONAL ENGINEER
11/05/03
115164

DATE	DESCRIPTION	REF NO.
1/05/04	ISSUED FOR CONSTRUCTION	
11/07/03	ISSUED FOR BID	

DRAINAGE DETAILS

SPECTRUM DRIVE EXTENSION

TOWN OF ADDISON, TEXAS

Huitt - Zollars, Inc.
3131 McKinney Ave., Suite 600, Dallas, TX 75204
Phone (214) 871-3311/Fax (214) 871-0757

DESIGN	DRAWN	APPR.	SCALE	DATE	PROJECT NO.	NO.
HZI	HZI	DEM	N.T.S.	NOV 2003	01-3220-01	24

h:\proj\01322001\dgn\32200ICDT05.DGN

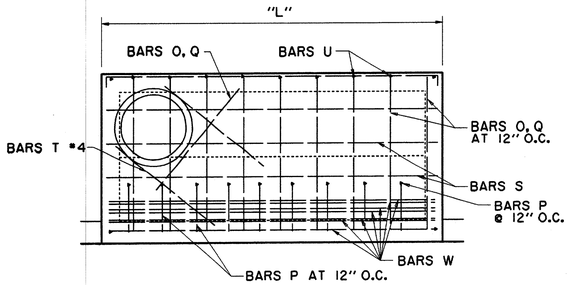

INLET PLAN
REINFORCING STEEL FOR BRICK ON INLET
N.T.S.

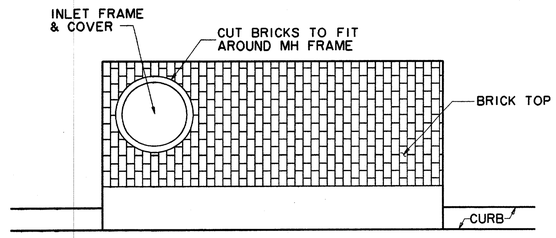

INLET PLAN
BRICK ON INLET
N.T.S.

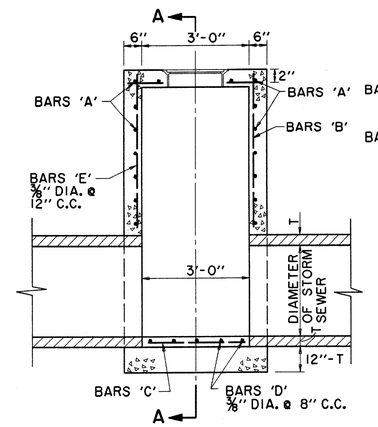

ELEVATION
N.T.S.

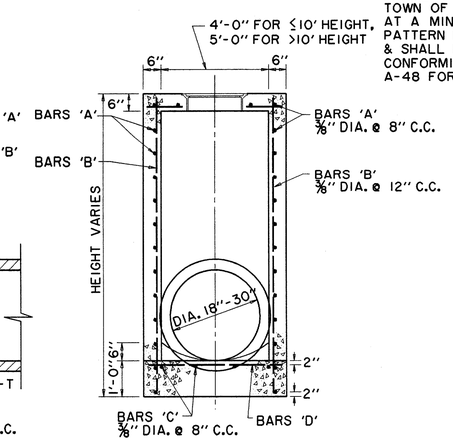

NOTE:
FRAME & COVER SHALL BE TOWN OF ADDISON STANDARD. AT A MINIMUM USE BASS & HAYS PATTERN NO. 400-24 OR EQUAL & SHALL BE OF GRAY CAST IRON CONFORMING TO A.S.T.M. SPEC. A-48 FOR CLASS 30 CAST IRON.

SECTION A-A
N.T.S.

TYPE A STORM SEWER MANHOLE
(FOR PIPE 18" TO 30" IN DIAMETER)

NOTE: STRUCTURAL CONCRETE TO BE MIN. 4200 psi UNLESS NOTED OTHERWISE

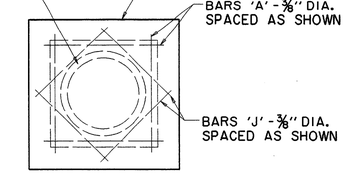

TOP PLAN
TYPE A & TYPE B
STORM SEWER MANHOLE
N.T.S.
NOTE MAXIMUM PIPE SIZE TO BE USED 78"

NOTE: MANHOLES & INLETS GREATER THHAN 4' IN DEPTH SHALL HAVE BASS & HAYES MODEL MA STEPS OR APPROVED EQUAL

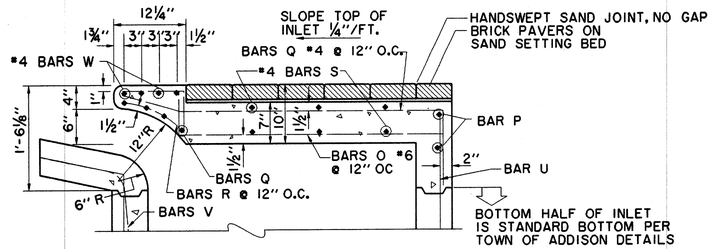

FOR EX. INLETS TO BE MODIFIED, BREAK OUT TOP ±20". TIE NEW STEEL TO OLD & POUR MODIFIED TOP.

SECTION C-C - DETAIL
BRICK ON INLET
N.T.S.

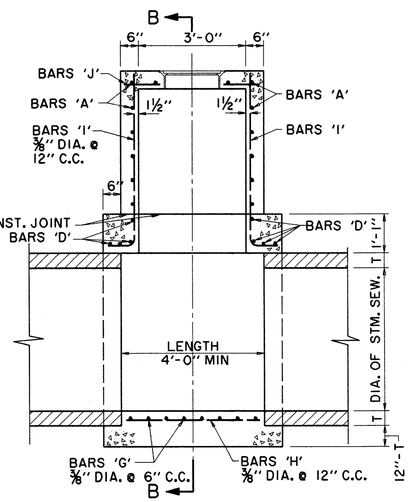

ELEVATION
N.T.S.

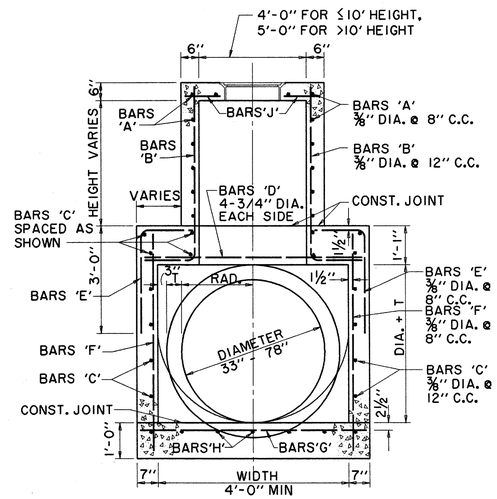

SECTION B-B
N.T.S.

TYPE B STORM SEWER MANHOLE
(FOR PIPE 33" TO 78" IN DIAMETER)

NOTE:
ALL INLET & MANHOLE WALLS SHALL BE FORMED. POURING AGAINST EXPOSED EARTH WILL NOT BE PERMITTED.

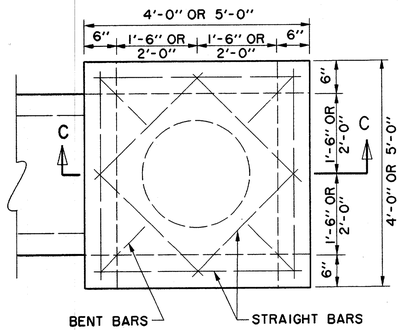

ALL REINF. SHALL BE #5 BARS.

STANDARD TYPE "Y" INLET
N.T.S.

NOTE: ALL 'Y' INLETS TO HAVE CONC. APRON AROUND INLET

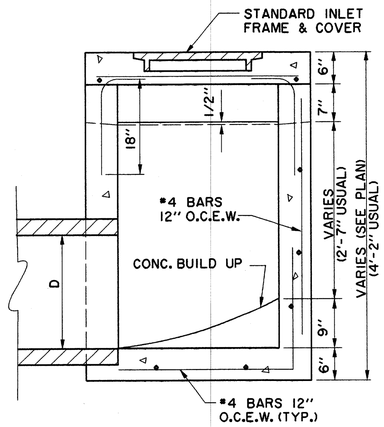

SECTION C-C
N.T.S.

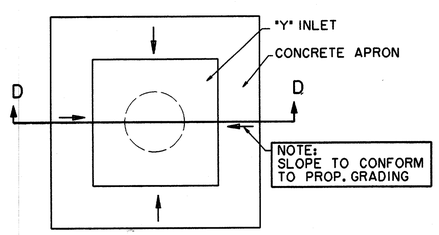

"Y" INLET CONC. APRON PLAN
N.T.S.

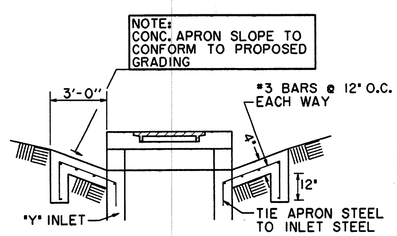

SECTION D-D
N.T.S.

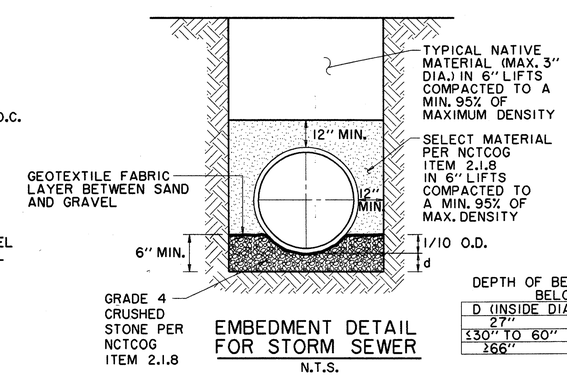

EMBEDMENT DETAIL FOR STORM SEWER
N.T.S.

DEPTH OF BEDDING MATERIAL BELOW PIPE

D (INSIDE DIAMETER)	d (MIN.)
27"	3"
≤30" TO 60"	4"
≥66"	6"

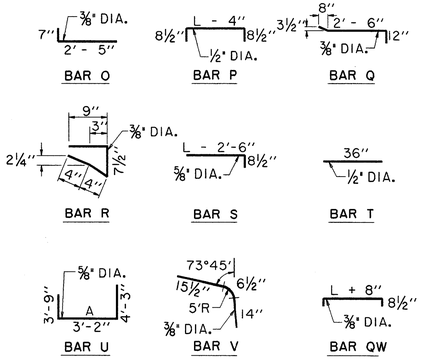

BAR DIAGRAMS (BRICK ON INLET)
N.T.S.

NOTE: BAR DESIGNATIONS AND DIMENSIONS ARE DIFFERENT FROM STEEL SCHEDULE FOR REGULAR INLETS.

STATE OF TEXAS
DAVID E. MEYERS
81512
REGISTERED PROFESSIONAL ENGINEER
1/5/04

DATE	DESCRIPTION	REF NO.
1/05/04	ISSUED FOR CONSTRUCTION	
11/07/03	ISSUED FOR BID	

DRAINAGE DETAILS

SPECTRUM DRIVE EXTENSION

TOWN OF ADDISON, TEXAS

Huitt - Zollars, Inc.
3131 Mckinney Ave., Suite 600, Dallas, TX 75204
Phone (214) 871-3311/Fax (214) 871-0757

DESIGN	DRAWN	APPR.	SCALE	DATE	PROJECT NO.	NO.
HZI	HZI	DEM	N.T.S.	NOV 2003	01-3220-01	25

hz \proj\01322001\dgn\32200ICDT06.DGN

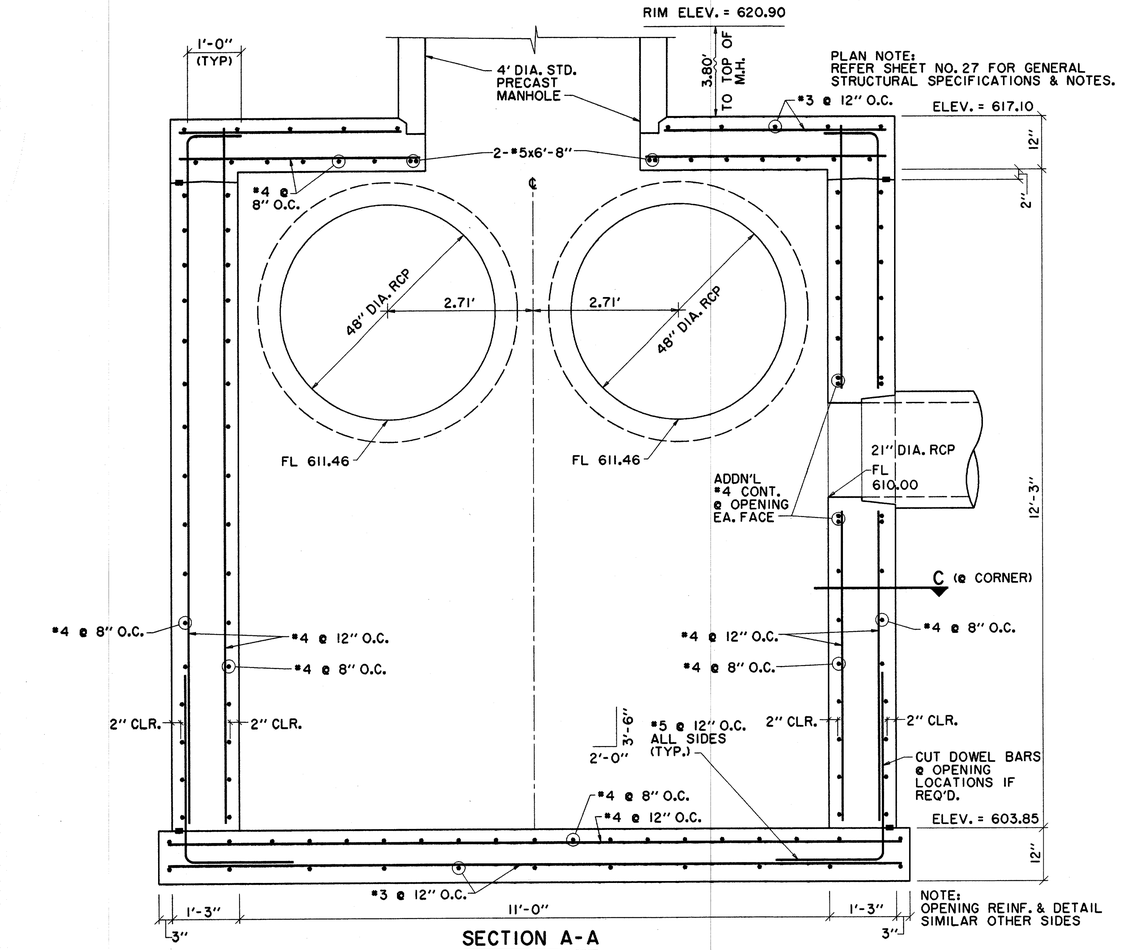

NOTE: OPENING REINF. & DETAIL SIMILAR OTHER SIDES

SECTION A-A

¾" = 1'-0"

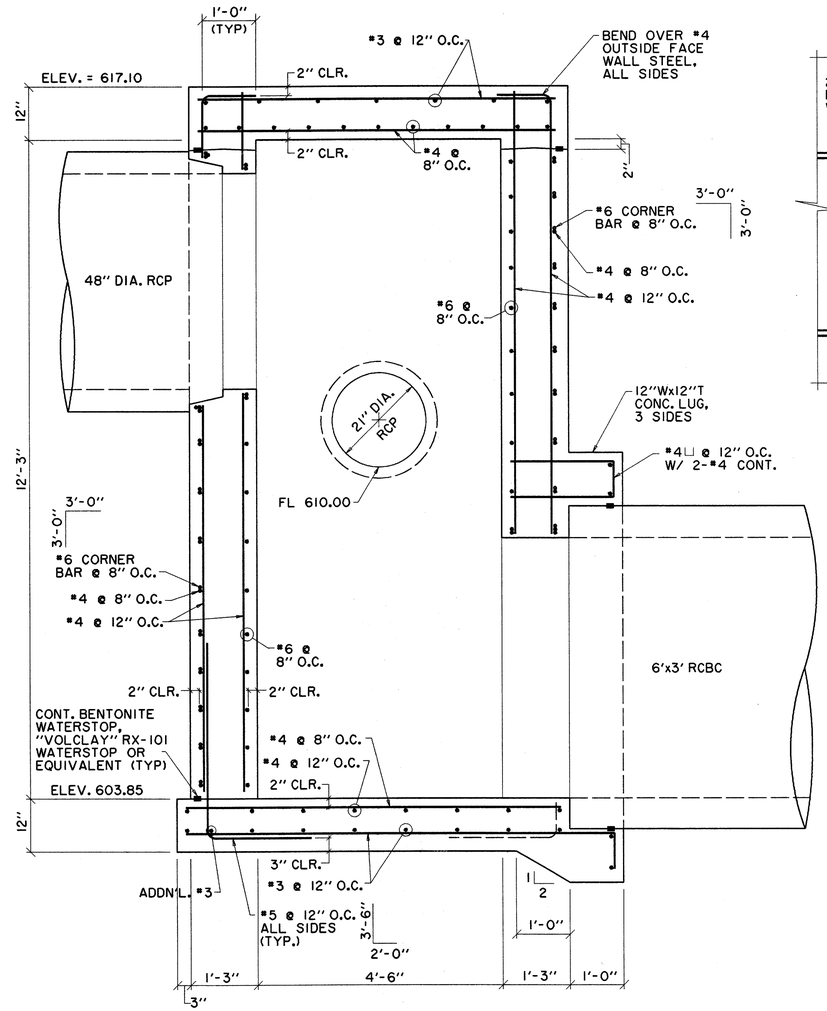

SECTION B-B

¾" = 1'-0"

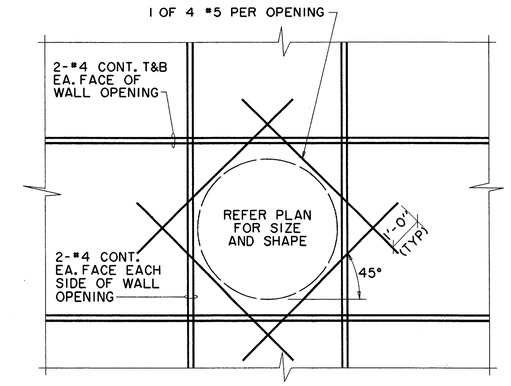

ADDITIONAL REINFORCING AROUND TYPICAL WALL OPENING

N.T.S.

NOTE: ONLY THE ADDITIONAL REINFORCEMENT AROUND 4' DIA. M.H. & OPENINGS IN WALLS ARE SHOWN IN THIS VIEW. SEE SECTIONS FOR TYPICAL SLAB REINFORCEMENT.

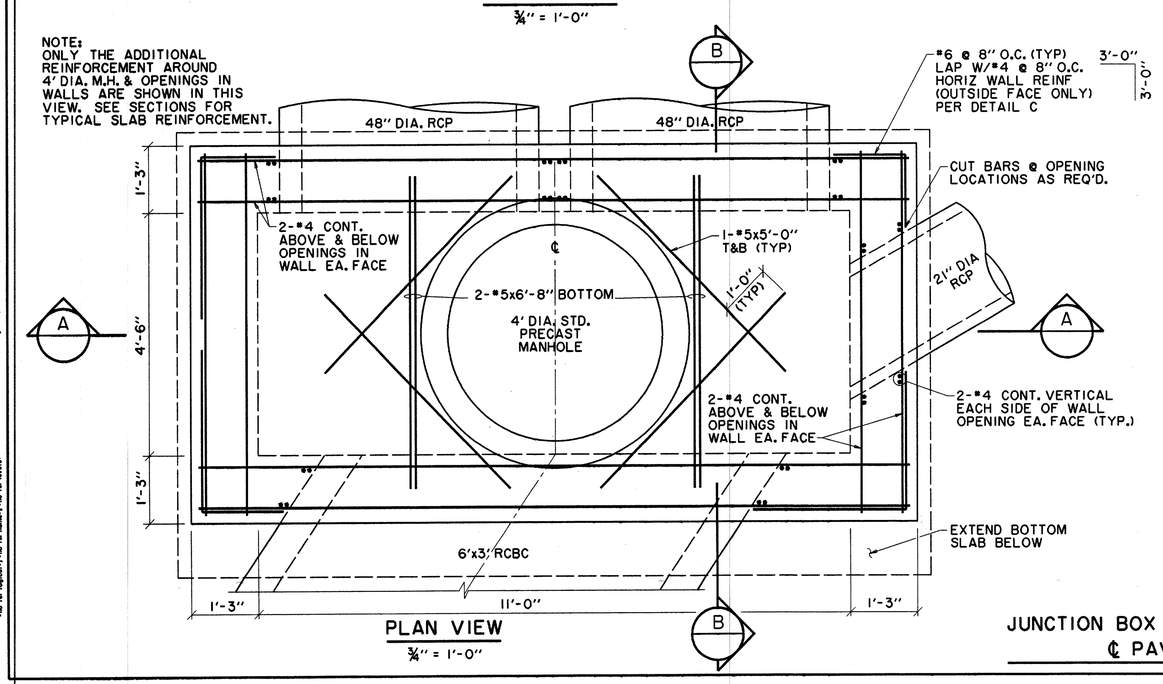

PLAN VIEW

¾" = 1'-0"

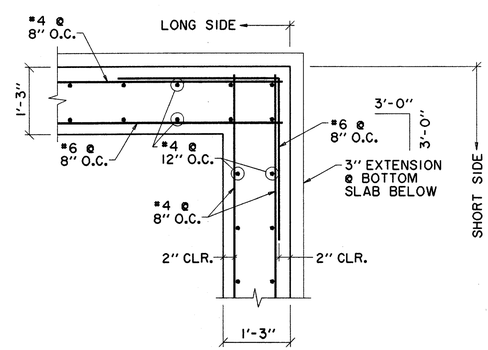

PARTIAL PLAN / SECTION CORNER DETAIL

C

¾" = 1'-0"

JUNCTION BOX @ STA. 1+59.41 - LINE T
℄ PAV. STA. 8+20.44

STATE OF TEXAS
CHRIS M. GILSTRAP
80602
REGISTERED PROFESSIONAL ENGINEER
01-05-04

DATE	DESCRIPTION	REF NO.
1/05/04	ISSUED FOR CONSTRUCTION	
11/07/03	ISSUED FOR BID	

JUNCTION BOX DETAILS

SPECTRUM DRIVE EXTENSION

TOWN OF ADDISON, TEXAS

Huitt - Zollars, Inc.
3131 Mckinney Ave., Suite 600, Dallas, TX 75204
Phone (214) 871-3311/Fax (214) 871-0757

DESIGN	DRAWN	APPR.	SCALE	DATE	PROJECT NO.	NO.
HZI	HZI	CMG	AS SHOWN	NOV 2003	01-3220-01	26

h:\proj\01322001\dgn\322001CDT14.DGN

JUNCTION BOX STRUCTURAL SPECIFICATIONS AND NOTES:

1. THE FOLLOWING STRUCTURAL NOTES APPLY UNLESS NOTED OTHERWISE ON THE STRUCTURAL DRAWINGS.
2. THE CONTRACT STRUCTURAL DRAWINGS AND SPECIFICATIONS REPRESENT THE FINISHED STRUCTURE, THEY DO NOT INDICATE THE METHOD OF CONSTRUCTION. THE CONTRACTOR SHALL PROVIDE ALL MEASURES NECESSARY TO PROTECT THE STRUCTURE DURING CONSTRUCTION. SUCH MEASURES SHALL INCLUDE, BUT NOT BE LIMITED TO, BRACING, SHORING AND MONITORING LOADS DUE TO CONSTRUCTION EQUIPMENT, ETC.
3. OBSERVATION VISITS TO THE SITE BY THE STRUCTURAL ENGINEER SHALL NOT INCLUDE INSPECTION OF THE ABOVE ITEMS NOR WILL THE STRUCTURAL ENGINEER BE RESPONSIBLE FOR THE CONTRACTOR'S MEANS, METHODS, TECHNIQUES, SEQUENCES FOR PROCEDURE OF CONSTRUCTION, OR THE SAFETY PRECAUTIONS AND THE PROGRAMS INCIDENT THERETO.
4. THE STRUCTURAL NOTES SHALL BE USED ALONG WITH THE PROJECT SPECIFICATIONS. WHERE A DIFFERENCE BETWEEN STRUCTURAL DRAWINGS, NOTES OR SPECIFICATIONS OCCUR, THE MOST STRINGENT REQUIREMENTS SHALL GOVERN FOR CONTRACTUAL PURPOSES. THE CONTRACTOR SHALL REQUEST CLARIFICATION IMMEDIATELY UPON DISCOVERY OF DIFFERENCES AND BEFORE PROCEEDING.
5. THE CONTRACTOR SHALL BE RESPONSIBLE FOR COMPENSATING THE OWNER AND/OR OWNER'S REPRESENTATIVE FOR ANY DESIGN CHANGES MADE AS A RESULT OF A DEVIATION BY THE CONTRACTOR FROM THE PLANS AND SPECIFICATIONS OR DUE TO ERRORS, FAULTY MATERIAL OR FAULTY WORKMANSHIP.
6. THE CONTRACTOR SHALL BE RESPONSIBLE FOR VERIFICATION OF ALL DIMENSIONS AND CONDITIONS WITH OTHER PROJECT DRAWINGS PRIOR TO START OF CONSTRUCTION. NOTIFY THE ENGINEER OF ANY DISCREPANCIES OR INCONSISTENCIES.
7. THE CONTRACTOR SHALL ESTABLISH AND VERIFY ALL OPENINGS AND INSERTS FOR ARCHITECTURAL, MECHANICAL, ELECTRICAL, AND PLUMBING WITH APPROPRIATE TRADES, DRAWINGS, AND SUBCONTRACTORS PRIOR TO CONSTRUCTION.
8. NOTES AND DETAILS ON DRAWINGS SHALL TAKE PRECEDENCE OVER GENERAL NOTES AND TYPICAL DETAILS. WHERE NO DETAILS ARE SHOWN, CONSTRUCTION SHALL CONFORM TO SIMILAR WORK ON PROJECT. TYPICAL DETAILS ARE NOT CUT ON PLANS, BUT APPLY UNLESS NOTED OTHERWISE.
9. WHERE REFERENCE IS MADE TO VARIOUS TEST STANDARDS FOR MATERIALS, SUCH STANDARDS SHALL BE THE LATEST EDITION AND/OR ADDENDUM.
10. ANY ENGINEERING DESIGN PROVIDED BY OTHERS AND SUBMITTED FOR REVIEW SHALL BEAR THE SEAL AND SIGNATURE OF AN ENGINEER REGISTERED IN THE STATE OF TEXAS.

DESIGN CRITERIA:

1. COMPLY WITH THE 2000 INTERNATIONAL BUILDING CODE.
2. SUPERIMPOSED DESIGN LOADS:

LIVE LOAD SURCHARGE	250 PSF	EITHER LOAD CAUSING GREATEST DISTRESS
LIVE WHEEL LOAD (HS20)	16,000 LBS	

3. GEOTECHNICAL
   A. EARTHWORK SHALL BE IN ACCORDANCE WITH THE SOILS INVESTIGATION REPORT (NO. 0702-1011), DATED AUG. 20, 2002 AND ADDITIONAL GEOTECHNICAL RECOMMENDATIONS DATED NOV. 20, 2002 (NO. 0702-1011 A), AND FEB. 28, 2003 (ADDENDUM #1) AND SEP. 29, 2003 (E-MAIL LETTER), PREPARED BY FUGRO-SOUTH, INC.
   B. DESIGN LATERAL EARTH PRESSURE: SATURATED AT-REST CONDITION WITH Ko=1.0
   C. WET UNIT WEIGHT: 120 PCF

ALIGNMENT OF ADJUSTABLE ITEMS:

1. WALL SUPPORTS, CURB ANGLES, AND SIMILAR SUPPORTING MEMBERS MUST BE ACCURATELY SET WITH STRING LINES AND/OR OTHER SUITABLE METHODS.
2. THESE ITEMS WILL BE CONSIDERED PROPERLY LOCATED WHEN THEIR LOCATION IS WITHIN 3/8" OF THE THEORETICAL LOCATION AND IF THE DISPLACEMENT ALONG ANY LENGTH DOES NOT EXCEED THE LENGTH DIVIDED BY 500.

WALL BACKFILL:

1. EXISTING ON-SITE CLAY MATERIAL CAN BE USED AROUND ALL SIDES OF JUNCTION BOX STRUCTURE. THE BACKFILL MATERIAL SHALL BE PLACED IN MAXIMUM OF EIGHT (8)-INCH LIFTS AND COMPACTED TO A MINIMUM DENSITY OF 95 PERCENT OF ITS MAXIMUM STANDARD PROCTOR (ASTM D 698) DRY DENSITY. THE MOISTURE CONTENT FOR ON-SITE CLAY DURING COMPACTION SHOULD RANGE FROM OPTIMUM TO FIVE PERCENTAGE POINTS ABOVE OPTIMUM (0 TO +5).
2. CUT, FILL AND COMPACT MATERIAL IN ACCORDANCE WITH GEOTECHNICAL RECOMMENDATIONS.

REINFORCING STEEL:

1. ALL REINFORCING STEEL FOR THE PROJECT SHALL BE DEFORMED BARS AND SHALL CONFORM TO THE FOLLOWING ASTM STANDARD DESIGNATIONS:
   #3 BARS AND LARGER IN CONCRETE — A-615, GRADE 60
2. 90° HOOKS SHOWN ON DETAILS AND CONCRETE COVER SHALL BE IN ACCORDANCE WITH ACI STANDARDS.
3. CHAIRS AND SUPPORT BARS SHALL BE PROVIDED IN ACCORDANCE WITH ACI STANDARDS.
4. REINFORCEMENT SHALL BE DETAILED TO MEET ACI 315 STANDARDS.
5. SHOP DRAWINGS SHALL BE SUBMITTED SHOWING ALL REINFORCEMENT TO BE PLACED. SHOP DRAWINGS SHALL INCLUDE PLANS AND ELEVATIONS SHOWING BAR LOCATIONS AND PLACEMENT WITHIN FOUNDATIONS, SLABS, BEAMS, COLUMNS AND WALLS.
6. WELDING OF REINFORCING BARS SHALL BE DONE WITH LOW HYDROGEN ELECTRODES, IN ACCORDANCE WITH AWS D1.4, AND ONLY AFTER APPROVAL OF THE STRUCTURAL ENGINEER.

CONCRETE:

1. ALL CONCRETE SHALL HAVE A 28-DAY COMPRESSIVE STRENGTH OF 4000 PSI.
2. THE FOLLOWING MINIMUM COVER SHALL BE PROVIDED FOR REINFORCEMENT PLACED IN CONCRETE:

A.	CONCRETE CAST AGAINST EARTH	3"
B.	CONCRETE WALLS AND SLABS EXPOSED TO EARTH OR WEATHER	2"
C.	ELEVATED CONCRETE SLABS AND BEAMS	1 1/2"
D.	CONCRETE NOT EXPOSED TO EARTH OR WEATHER	2"

3. CONCRETE MIX DESIGN SHALL BE SUBMITTED TO THE ENGINEER.
4. ADMIXTURES MAY BE USED; HOWEVER, THEY SHALL NOT BE CONSIDERED AS REPLACING ANY PART OF THE CEMENT CONTENT FOR A SPECIFIED CONCRETE STRENGTH.
5. POZZOLAN CLASS F MAY BE ADDED AT A RATIO NOT TO EXCEED 18% OF THE TOTAL WEIGHT OF CEMENT PLUS POZZOLAN.
6. NO ALUMINUM CONDUITS OR PIPES SHALL BE EMBEDDED IN CONCRETE.
7. COLD WEATHER AND HOT WEATHER CONCRETING SHALL BE PLACED ACCORDING TO ACI 306 AND ACI 305 RECOMMENDED PRACTICES RESPECTIVELY.
8. MECHANICALLY VIBRATE ALL CONCRETE.

FORMWORK:

1. CONCRETE FORMWORK, SHORING, FORM REMOVAL, AND RESHORING ARE CONSTRUCTION MEANS AND METHODS AND ARE THE SOLE RESPONSIBILITY OF THE CONTRACTOR.
2. NO LOAD CONCENTRATION ON FLOOR AND ROOF SLABS AND BEAMS SHALL OCCUR DURING CONSTRUCTION WITHOUT ADEQUATELY PROTECTING THE WORK.

CONCRETE JOINTS:

1. SEE PLANS AND SPECIFICATIONS FOR TYPE AND LOCATION OF JOINTS IN SLABS ON GRADE.
2. CONSTRUCTION JOINTS SHALL BE PLACED WHERE SHOWN ON DETAILS ONLY.
3. ALL REINFORCING SHALL BE CONTINUOUS THROUGH CONSTRUCTION JOINTS.
4. PROVIDE SHOP DRAWINGS SHOWING LOCATION OF CONSTRUCTION JOINTS NOT SHOWN ON CONTRACT DRAWINGS.

SHOP DRAWINGS AND SUBMITTALS

1. SHOP DRAWINGS SHALL BE PREPARED AND SUBMITTED FOR REVIEW FOR EACH STRUCTURAL BUILDING MATERIAL AS SPECIFIED IN THE STRUCTURAL GENERAL NOTES AND THE CONTRACT SPECIFICATIONS. SEE THE CONTRACT SPECIFICATIONS FOR SUBMITTAL PROCEDURES AND ADDITIONAL INFORMATION.
2. SHOP DRAWINGS SHALL USE DRAFTING LINE WORK AND LETTERING THAT IS CLEARLY LEGIBLE. SHOP DRAWINGS SHALL NOT CONTAIN REPRODUCTIONS OF THE CONTRACT DRAWING PLANS OR DETAILS.
3. SHOP DRAWINGS SHALL NOT SHOW MATERIALS FOR MORE THAN ONE LEVEL ON THE SAME PLAN.
4. SHOP DRAWINGS SHALL SHOW CLEAR AND COMPLETE INFORMATION FOR THE FABRICATION (DETAIL SHEETS AND/OR MATERIAL LISTS) AND INSTALLATION (ERECTION AND/OR PLACING DRAWINGS) OF MATERIALS. ERECTION AND PLACING DRAWING SHALL PROVIDE EVERY NOTE AND DETAIL REQUIRED TO CORRECTLY INSTALL MATERIALS; THEY SHALL NOT REFER TO THE CONTRACT DOCUMENTS FOR INSTALLATION INFORMATION.
5. ERECTION AND PLACING DRAWING PLANS SHALL BE ORIENTED AND REFERENCED IN THE SAME MANNER AS PLANS ON THE CONTRACT DOCUMENTS.
6. SHOP DRAWINGS SHALL LIST THE GRADE, CLASS AND/OR STRENGTH OF MATERIALS.
7. SUBMITTALS RECEIVED BY THE ENGINEER WHICH ARE INSUFFICIENT OR INCOMPLETE MAY BE REJECTED AND RETURNED TO THE CONTRACTOR WITHOUT REVIEW. THE CONTRACTOR SHALL BE RESPONSIBLE FOR ANY DELAYS IN THE CONSTRUCTION SCHEDULE DUE TO REJECTED INSUFFICIENT OR INCOMPLETE SHOP DRAWING SUBMITTALS.
8. SHOP DRAWINGS SHALL BE CHECKED AND INITIALED BY THE SUPPLIER PRIOR TO SUBMITTAL TO THE CONTRACTOR.
9. THE CONTRACTOR SHALL THOROUGHLY CHECK, COORDINATE, STAMP, DATE AND INITIAL EACH AND EVERY SHOP DRAWING PRINT PRIOR TO SUBMITTAL TO THE ARCHITECT/ENGINEER FOR REVIEW. SHOP DRAWINGS WHICH DO NOT MEET THESE REQUIREMENTS SHALL BE CONSIDERED INCOMPLETE AND RETURNED TO THE CONTRACTOR WITHOUT REVIEW.
10. CONTRACTOR'S REQUEST TO DEVIATE FROM THE CONTRACT DOCUMENTS SHALL BE CLEARLY IDENTIFIED BY "CLOUDING" ON THE SHOP DRAWINGS.
11. RESUBMITTED SHOP DRAWINGS SHALL CLEARLY IDENTIFY ITEMS WHICH HAVE BEEN CORRECTED.

STATE OF TEXAS
CHRIS M. GILSTRAP
80602
REGISTERED
PROFESSIONAL ENGINEER
01-05-04

DATE	DESCRIPTION	REF NO.
1/05/04	ISSUED FOR CONSTRUCTION	
11/07/03	ISSUED FOR BID	

JUNCTION BOX STRUCTURAL SPECIFICATIONS & NOTES

SPECTRUM DRIVE EXTENSION

TOWN OF ADDISON, TEXAS

Huitt - Zollars, Inc.
3131 Mckinney Ave., Suite 600, Dallas, TX 75204
Phone (214) 871-3311/Fax (214) 871-0757

DESIGN	DRAWN	APPR.	SCALE	DATE	PROJECT NO.	NO.
HZI	HZI	CMG	NONE	NOV 2003	01-3220-01	27

h:\proj\0132201\dgn\322001CDT15.DGN

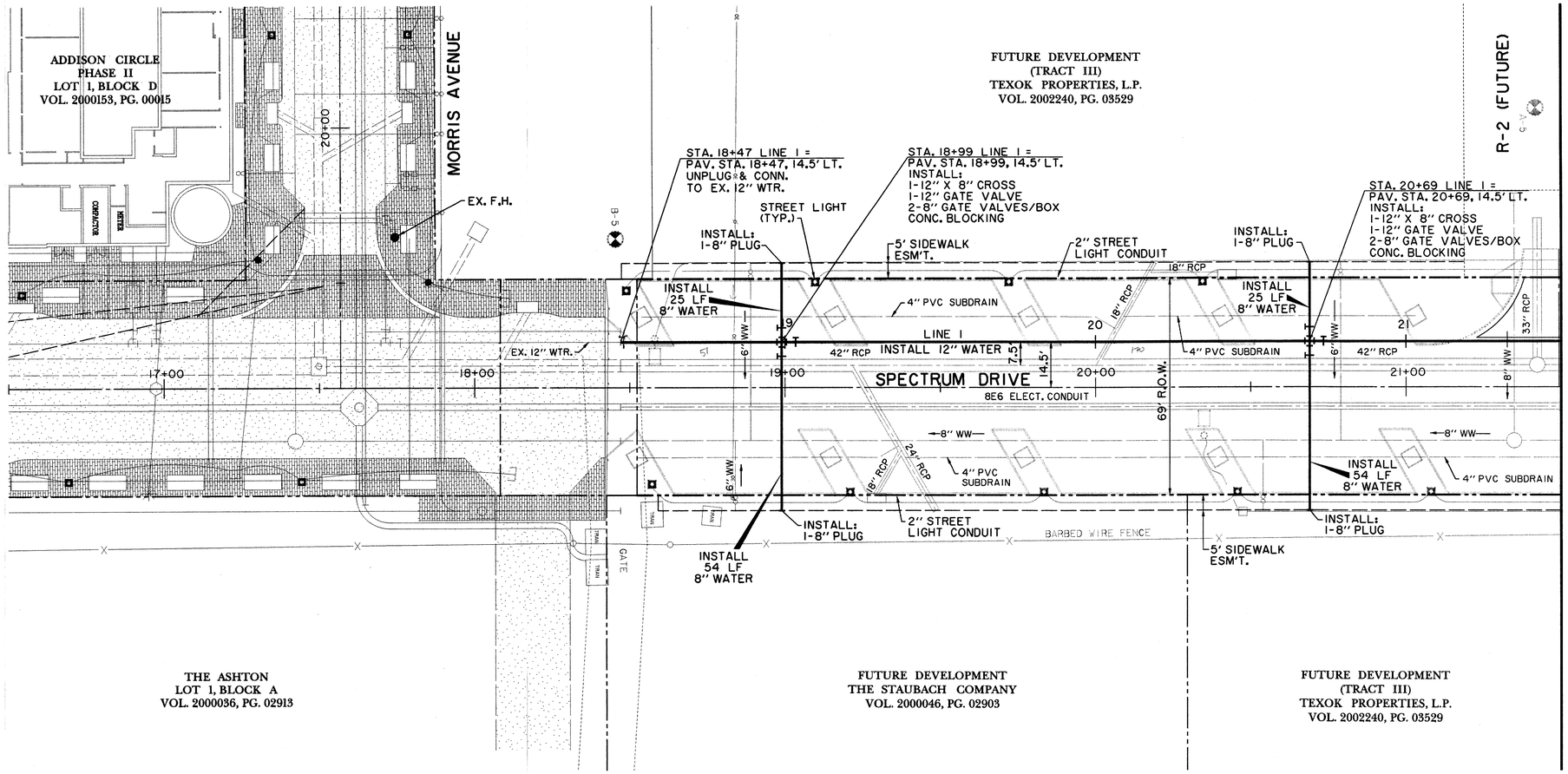

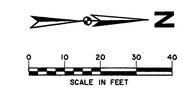

NOTES:

1. METERS, METER CANS, VAULTS AND BACKFLOW PREVENTION ASSEMBLIES TO BE INSTALLED AND TESTED PER TOWN OF ADDISON GENERAL REQUIREMENTS.

2. INCLUDE "LOCATOR WIRE" ON ALL PLASTIC WATER MAINS.

3. ALL FITTINGS SHALL BE ANCHORED BY FLANGE, RESTRAINING GLAND OR ANCHOR COUPLING.

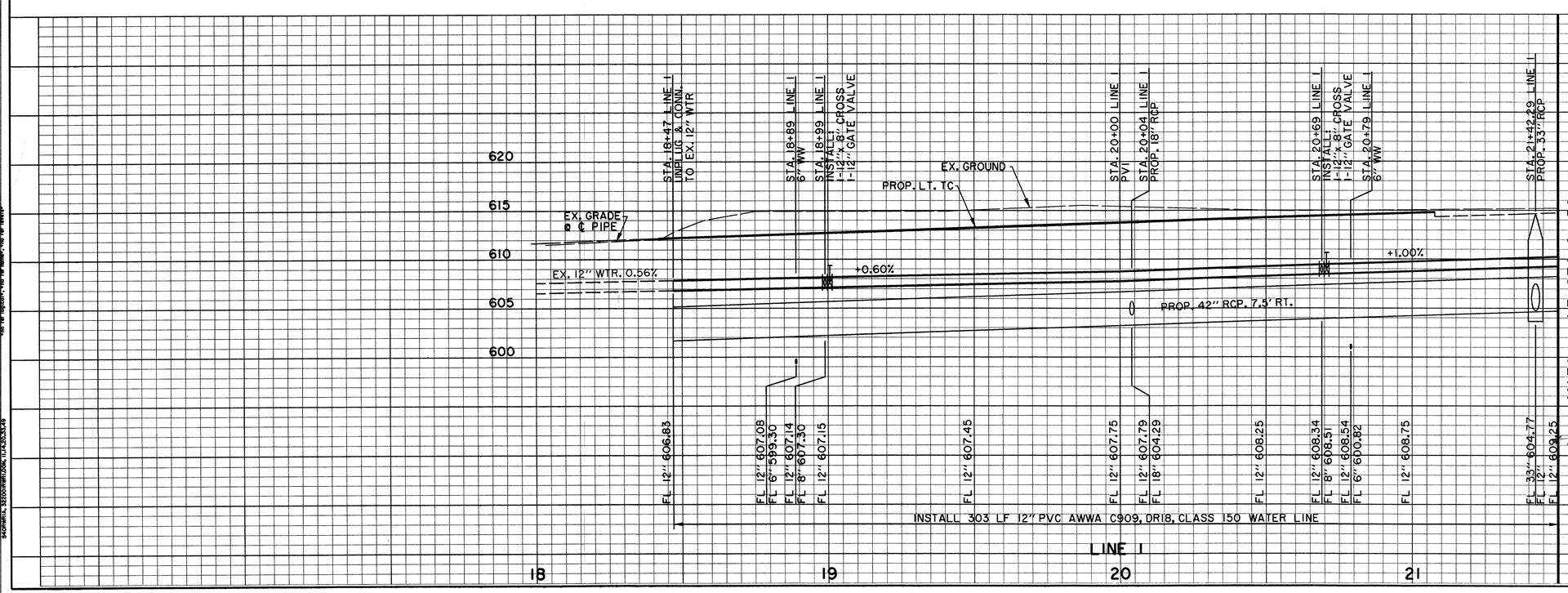

BENCHMARKS:

"□" CUT SOUTHWEST CORNER OF CURB INLET, WEST SIDE OF SPECTRUM DRIVE, ±30' NORTH OF MORRIS AVENUE.
ELEV. 611.84

"□" CUT ON TOP EAST END OF CURB INLET ON NORTH SIDE OF MORRIS AVENUE AND ±150' EAST OF QUORUM DRIVE CENTERLINE.
ELEV. 616.39

STATE OF TEXAS
DAVID E. MEYERS
81512
REGISTERED PROFESSIONAL ENGINEER
11/5/04

DATE	DESCRIPTION	REF NO.
1/05/04	ISSUED FOR CONSTRUCTION	
11/07/03	ISSUED FOR BID	

WATER PLAN & PROFILE
LINE 1 - SPECTRUM DRIVE
SPECTRUM DRIVE EXTENSION

TOWN OF ADDISON, TEXAS

Huitt - Zollars, Inc.
3131 McKinney Ave., Suite 600, Dallas, TX 75204
Phone (214) 871-3311/Fax (214) 871-0757

DESIGN	DRAWN	APPR.	SCALE	DATE	PROJECT NO.	NO.
HZI	HZI	DEM	H: 1"=20' V: 1"=6'	NOV 2003	01-3220-01	28

h:\proj\01322001\dgn\322001UW03.DGN

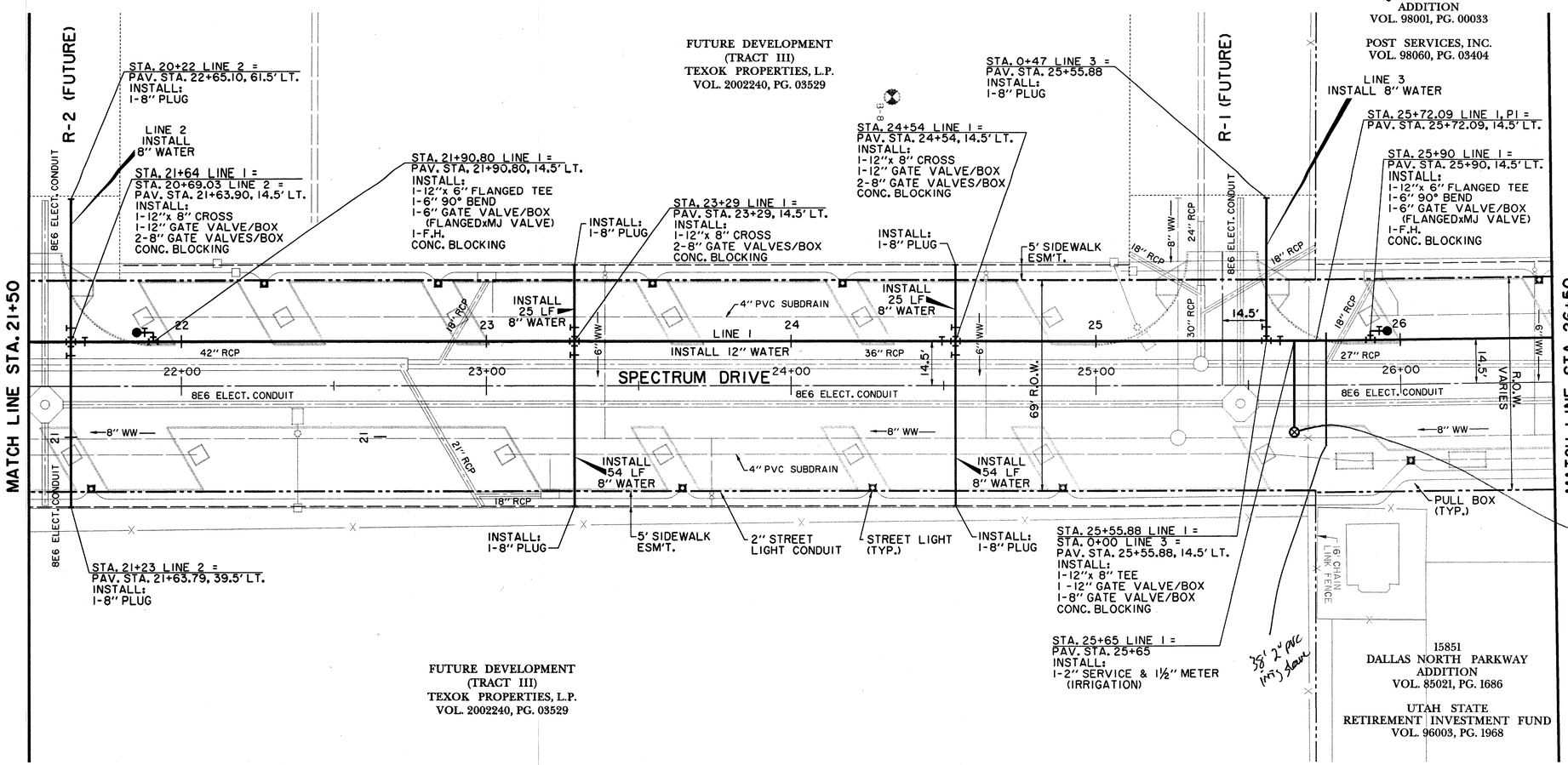

NOTES:

1. METERS, METER CANS, VAULTS AND BACKFLOW PREVENTION ASSEMBLIES TO BE INSTALLED AND TESTED PER TOWN OF ADDISON GENERAL REQUIREMENTS.

2. INCLUDE "LOCATOR WIRE" ON ALL PLASTIC WATER MAINS.

3. ALL FITTINGS SHALL BE ANCHORED BY FLANGE, RESTRAINING GLAND OR ANCHOR COUPLING.

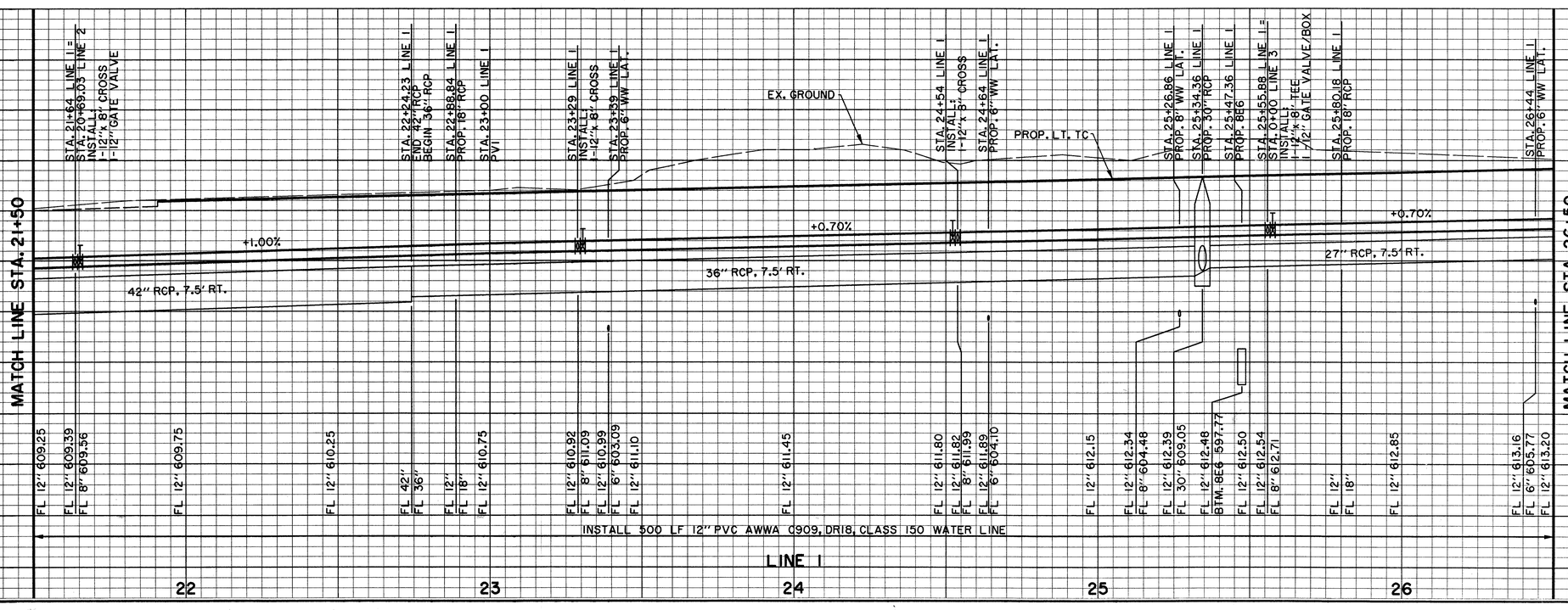

BENCHMARKS:

"□" CUT SOUTHWEST CORNER OF CURB INLET, WEST SIDE OF SPECTRUM DRIVE, ±30' NORTH OF MORRIS AVENUE.
ELEV. 611.84

"□" CUT ON TOP EAST END OF CURB INLET ON NORTH SIDE OF MORRIS AVENUE AND ±150' EAST OF QUORUM DRIVE CENTERLINE.
ELEV. 616.39

STATE OF TEXAS
DAVID E. MEYERS
81512
REGISTERED
PROFESSIONAL ENGINEER
1/5/04

DATE	DESCRIPTION	REF NO.
1/05/04	ISSUED FOR CONSTRUCTION	
11/07/03	ISSUED FOR BID	

WATER PLAN & PROFILE
LINE 1 - SPECTRUM DRIVE

SPECTRUM DRIVE EXTENSION

TOWN OF ADDISON, TEXAS

Huitt - Zollars, Inc.
3131 Mckinney Ave., Suite 600, Dallas, TX 75204
Phone (214) 871-3311/Fax (214) 871-0757

DESIGN	DRAWN	APPR.	SCALE	DATE	PROJECT NO.	NO.
HZI	HZI	DEM	H: 1"=20' V: 1"=6'	NOV 2003	01-3220-01	29

h:\proj\01322001\dgn\322001UW04.DGN

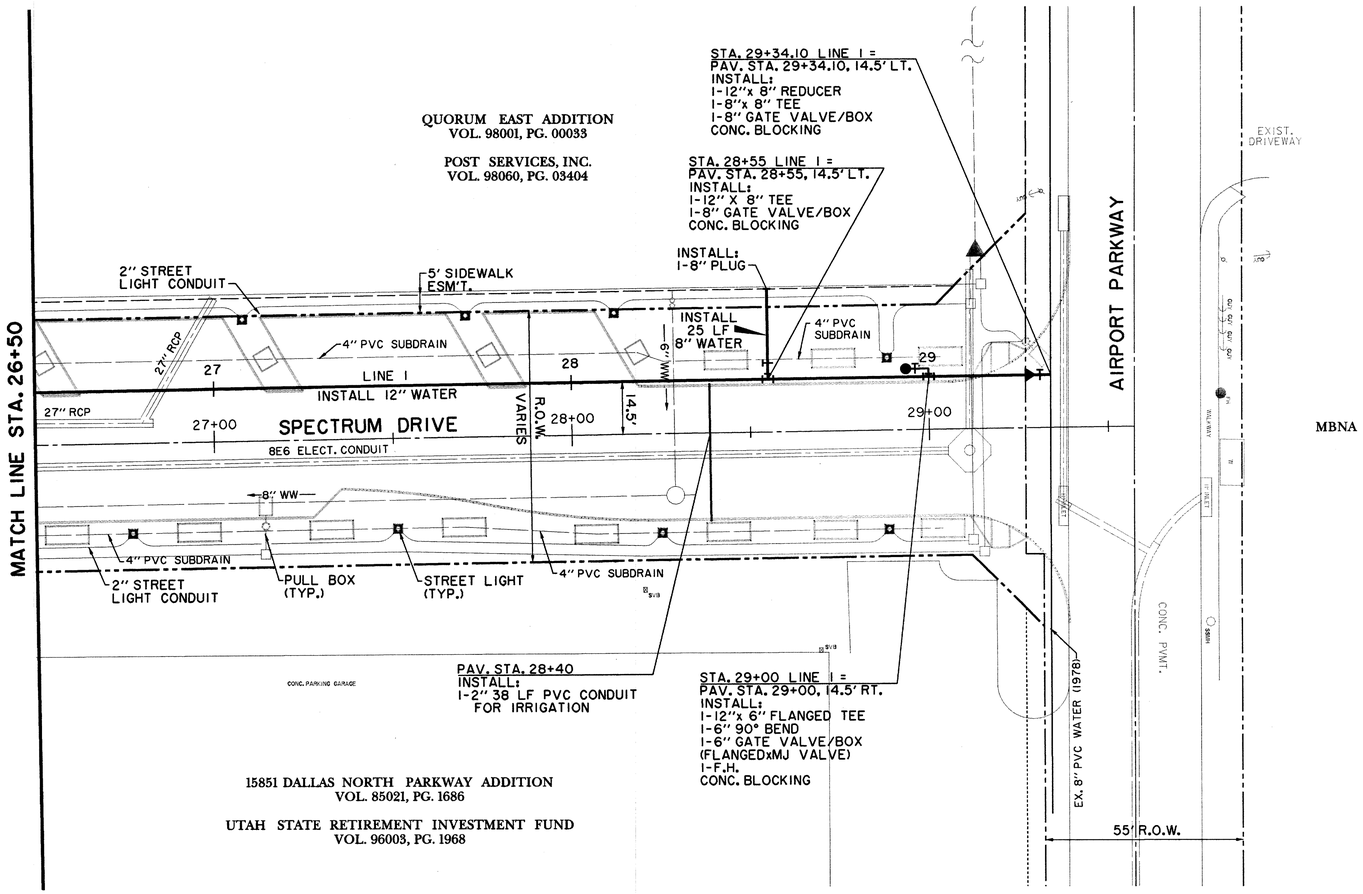

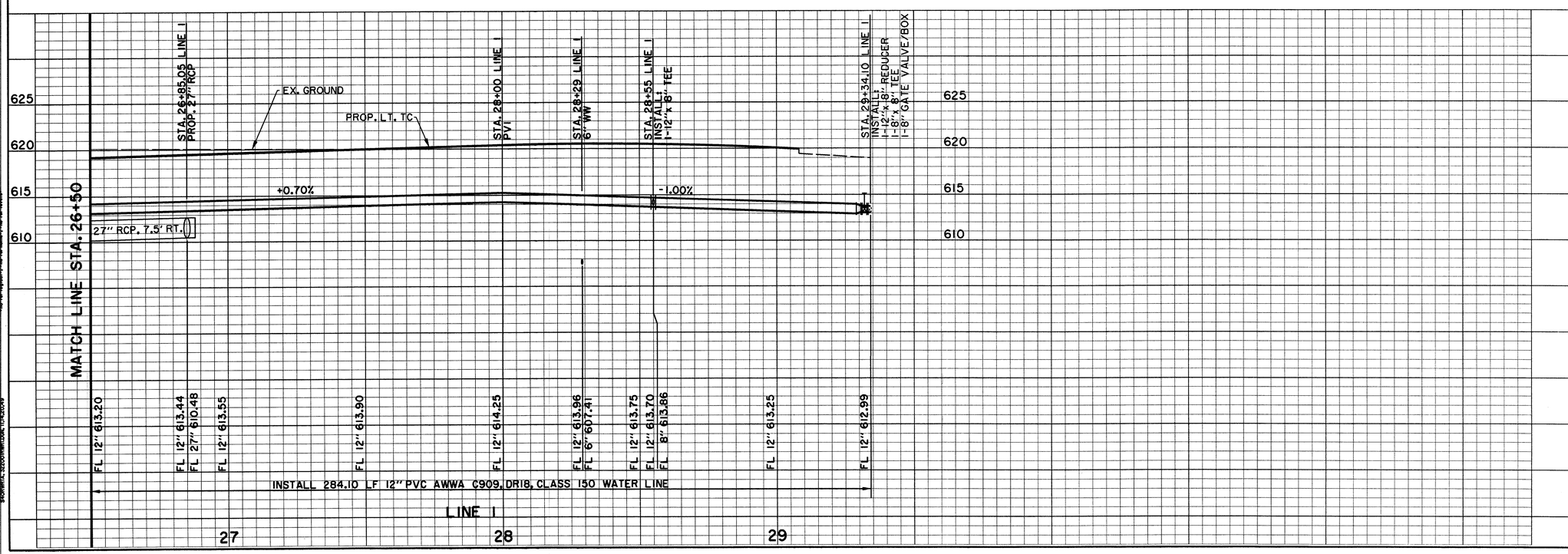

NOTES:

1. METERS, METER CANS, VAULTS AND BACKFLOW PREVENTION ASSEMBLIES TO BE INSTALLED AND TESTED PER TOWN OF ADDISON GENERAL REQUIREMENTS.

2. INCLUDE "LOCATOR WIRE" ON ALL PLASTIC WATER MAINS.

3. ALL FITTINGS SHALL BE ANCHORED BY FLANGE, RESTRAINING GLAND OR ANCHOR COUPLING.

N

0 10 20 30 40
SCALE IN FEET

BENCHMARKS:

"□" CUT SOUTHWEST CORNER OF CURB INLET, WEST SIDE OF SPECTRUM DRIVE, ±30' NORTH OF MORRIS AVENUE.
ELEV. 611.84

"□" CUT ON TOP EAST END OF CURB INLET ON NORTH SIDE OF MORRIS AVENUE AND ±150' EAST OF QUORUM DRIVE CENTERLINE.
ELEV. 616.39

STATE OF TEXAS
DAVID E. MEYERS
81512
REGISTERED
PROFESSIONAL ENGINEER
1/5/04

DATE	DESCRIPTION	REF NO.
1/05/04	ISSUED FOR CONSTRUCTION	
11/07/03	ISSUED FOR BID	

WATER PLAN & PROFILE
LINE 1 - SPECTRUM DRIVE
SPECTRUM DRIVE EXTENSION
TOWN OF ADDISON, TEXAS

Hulff - Zollars, Inc.
3131 Mckinney Ave., Suite 600, Dallas, TX 75204
Phone (214) 871-3311/Fax (214) 871-0757

DESIGN	DRAWN	APPR.	SCALE	DATE	PROJECT NO.	NO.
HZI	HZI	DEM	H: 1"=20' V: 1"=6'	NOV 2003	01-3220-01	30

h:\proj\01322001\dgn\322001UW05.DGN

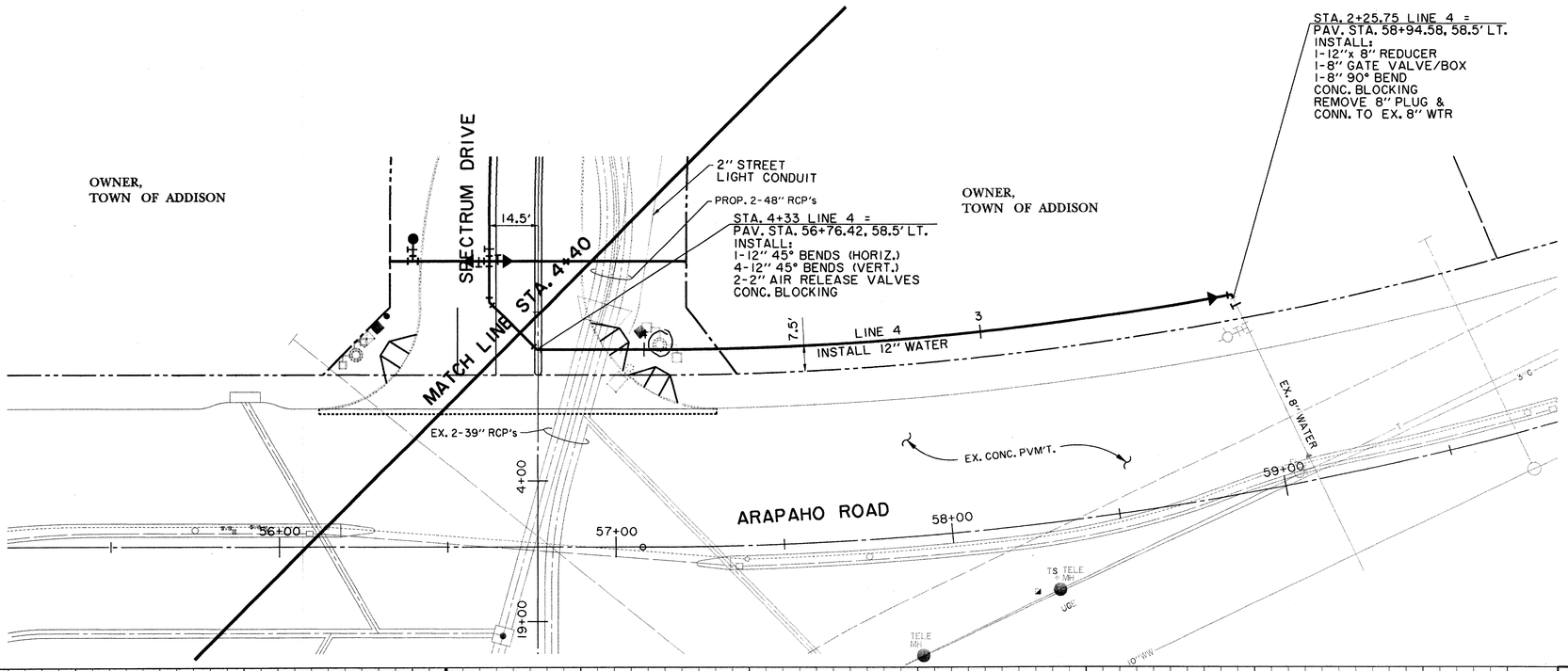

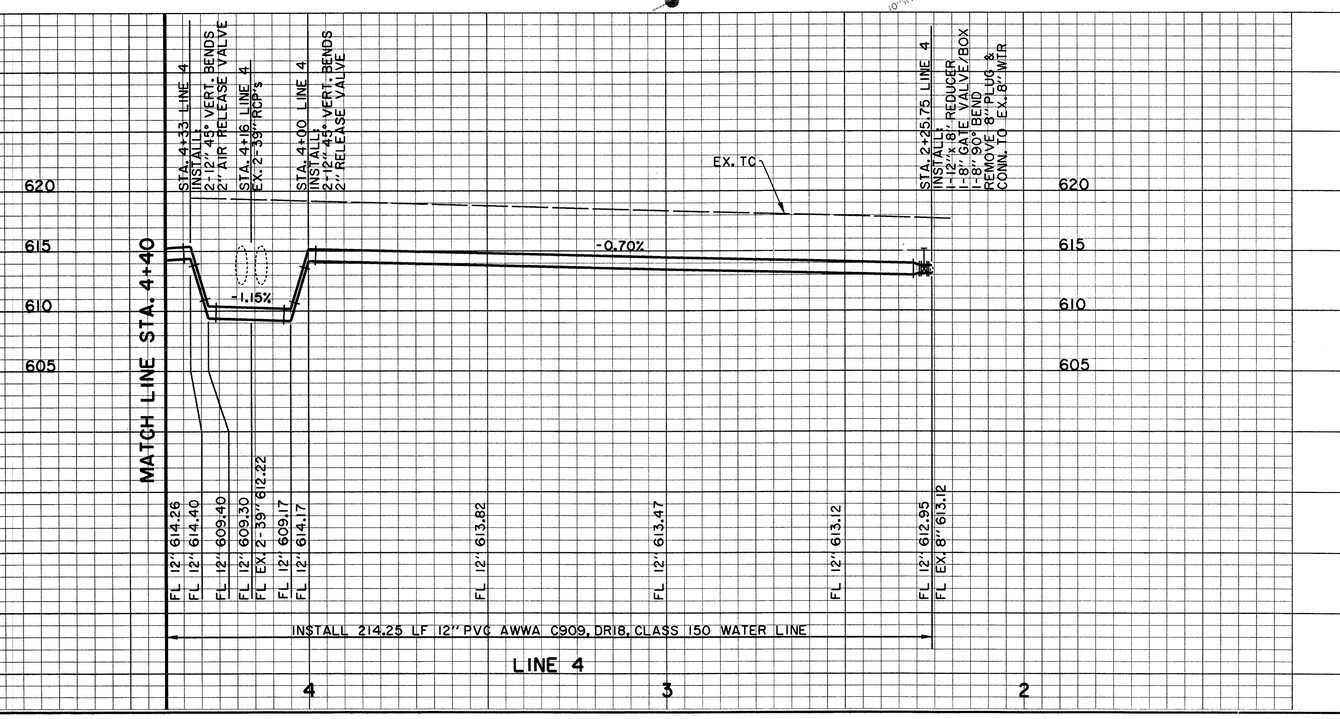

N

0 10 20 30 40
SCALE IN FEET

NOTES:

1. METERS, METER CANS, VAULTS AND BACKFLOW PREVENTION ASSEMBLIES TO BE INSTALLED AND TESTED PER TOWN OF ADDISON GENERAL REQUIREMENTS.

2. INCLUDE "LOCATOR WIRE" ON ALL PLASTIC WATER MAINS.

3. ALL FITTINGS SHALL BE ANCHORED BY FLANGE, RESTRAINING GLAND OR ANCHOR COUPLING.

BENCHMARKS:

"□" CUT SOUTHWEST CORNER OF CURB INLET, WEST SIDE OF SPECTRUM DRIVE, ±30' NORTH OF MORRIS AVENUE.
ELEV. 611.84

"X" CUT ON CONC. TOP OF CURB OF MEDIAN NOSE ON SPECTRUM DRIVE AT INTERSECTION OF McENTIRE PLACE.
ELEV. 619.30

STATE OF TEXAS
DAVID E. MEYERS
81512
REGISTERED PROFESSIONAL ENGINEER
11/5/04

DATE	DESCRIPTION	REF NO.
1/05/04	ISSUED FOR CONSTRUCTION	
11/07/03	ISSUED FOR BID	

WATER PLAN & PROFILE
LINE 4 - ARAPAHO ROAD

SPECTRUM DRIVE EXTENSION

TOWN OF ADDISON, TEXAS

Huitt - Zollars, Inc.
3131 Mckinney Ave., Suite 600, Dallas, TX 75204
Phone (214) 871-3311/Fax (214) 871-0757

DESIGN	DRAWN	APPR.	SCALE	DATE	PROJECT NO.	NO.
HZI	HZI	DEM	H: 1"=20' V: 1"=6'	NOV 2003	01-3220-01	31

h:\proj\01322001\dgn\322001UW06.DGN

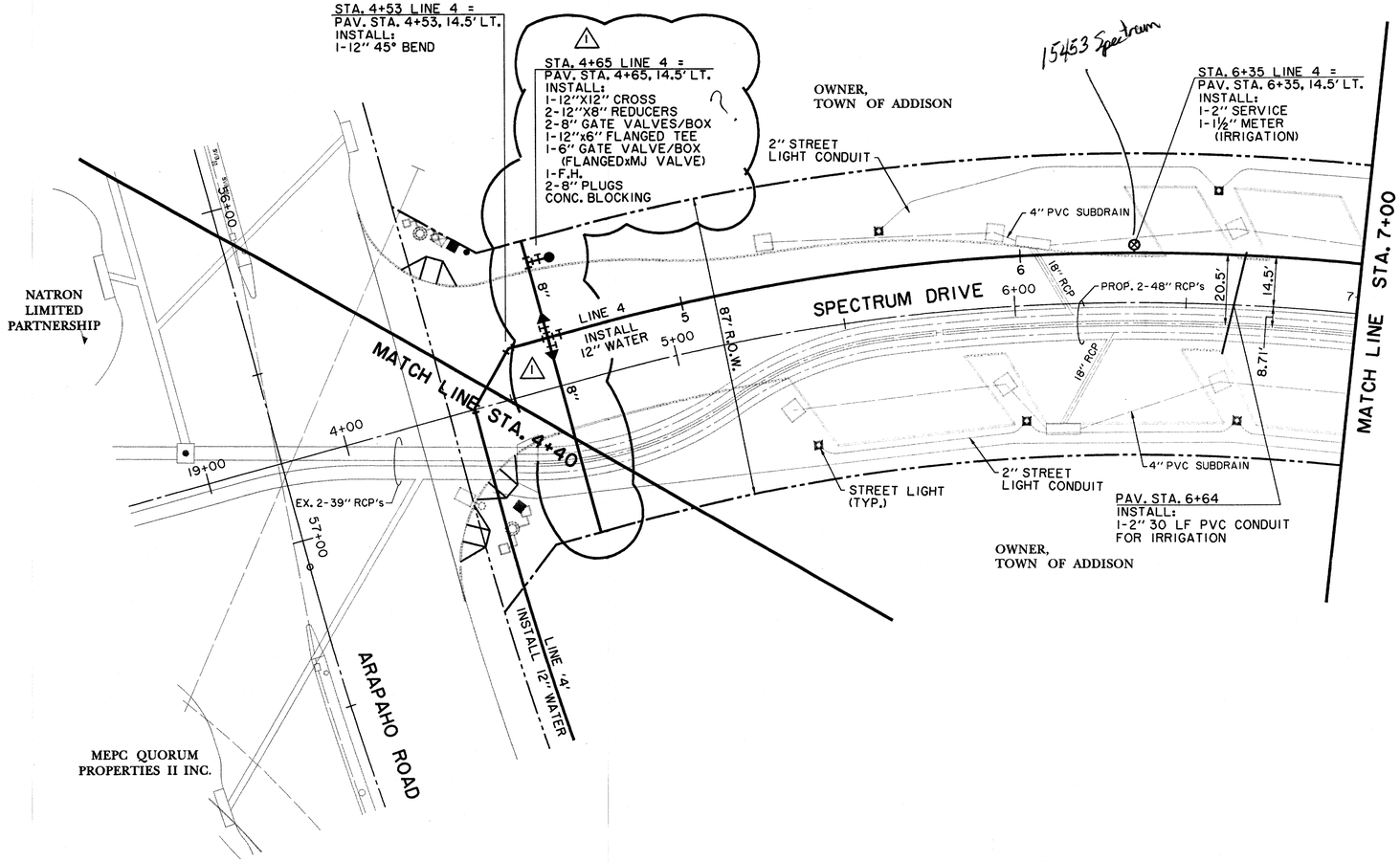

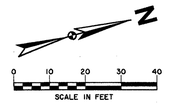

NOTES:

1. METERS, METER CANS, VAULTS AND BACKFLOW PREVENTION ASSEMBLIES TO BE INSTALLED AND TESTED PER TOWN OF ADDISON GENERAL REQUIREMENTS.

2. INCLUDE "LOCATOR WIRE" ON ALL PLASTIC WATER MAINS.

3. ALL FITTINGS SHALL BE ANCHORED BY FLANGE, RESTRAINING GLAND OR ANCHOR COUPLING.

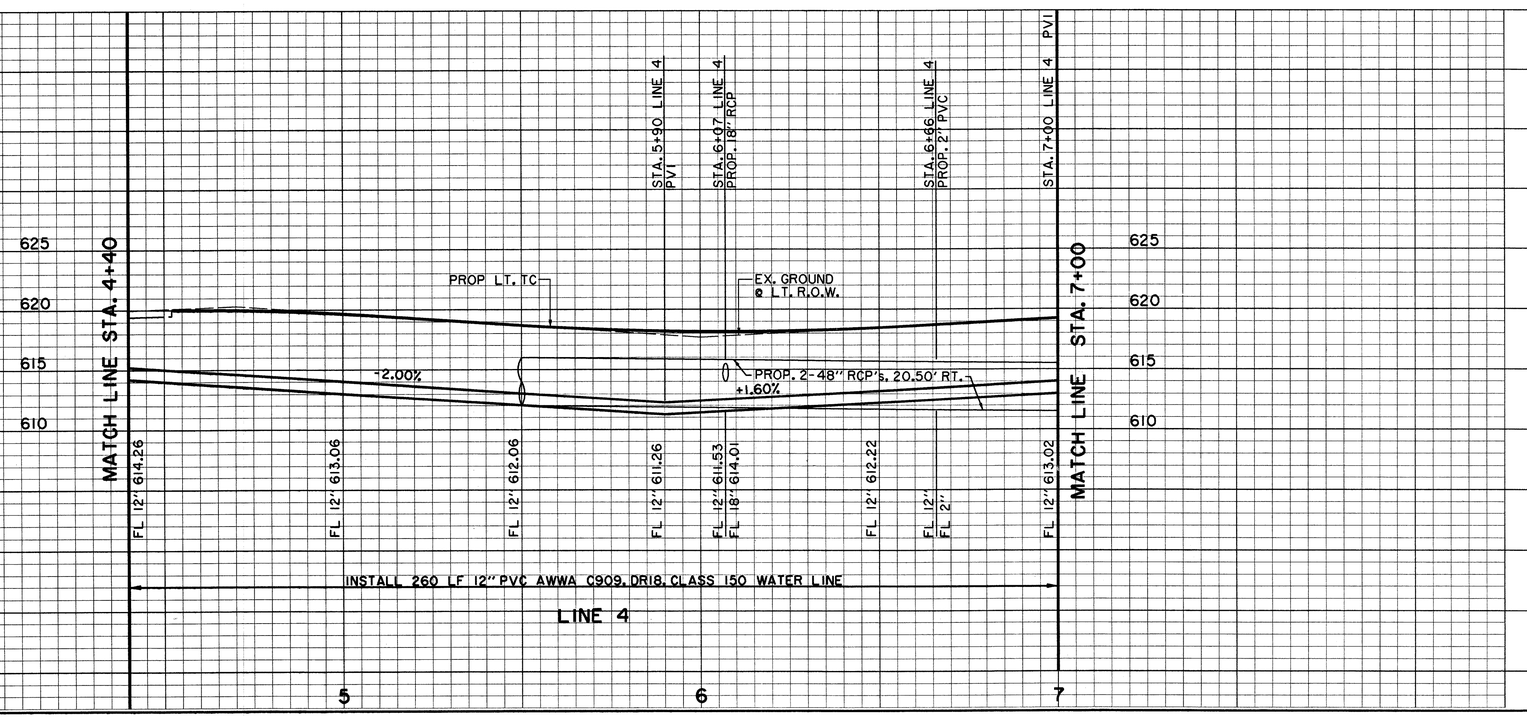

BENCHMARKS:

"□" CUT SOUTHWEST CORNER OF CURB INLET, WEST SIDE OF SPECTRUM DRIVE, ±30' NORTH OF MORRIS AVENUE.
ELEV. 611.84

"X" CUT ON CONC. TOP OF CURB OF MEDIAN NOSE ON SPECTRUM DRIVE AT INTERSECTION OF McENTIRE PLACE.
ELEV. 619.30

STATE OF TEXAS
DAVID E. MEYERS
81512
REGISTERED
PROFESSIONAL ENGINEER
11/5/04

DATE	DESCRIPTION	REF NO.
1/05/04	ISSUED FOR CONSTRUCTION	
11/20/03	ADDENDUM NO. 1	1
11/07/03	ISSUED FOR BID	

WATER PLAN & PROFILE
LINE 4 - SPECTRUM DRIVE

SPECTRUM DRIVE EXTENSION

TOWN OF ADDISON, TEXAS

Huitt - Zollars, Inc.
3131 Mckinney Ave., Suite 600, Dallas, TX 75204
Phone (214) 871-3311/Fax (214) 871-0757

DESIGN	DRAWN	APPR.	SCALE	DATE	PROJECT NO.	NO.
HZI	HZI	DEM	H: 1"=20' V: 1"=6'	NOV 2003	01-3220-01	32

h:\proj\01322001\dgn\32200IUW01.DGN

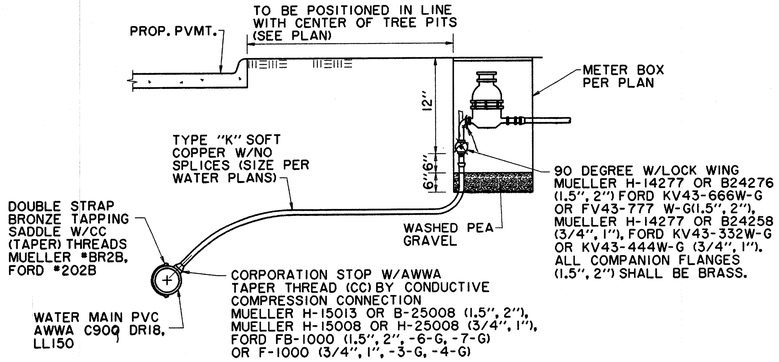

NOTE:

THE TAPPING SADDLE & CORPORATION STOP MUST BE POLY-WRAPPED (8 MIL) & HAND BACKFILLED WITH SAND TO A DEPTH OF 12". CAUTION !! INSPECTION MUST BE CALLED FOR & COMPLETED PRIOR TO BACKFILL OR TAP MUST BE RE-EXPOSED BY THE CONTRACTOR FOR INSPECTION BY THE TOWN.

TYPICAL WATER SERVICE DETAIL UP TO 2" METER

N.T.S.

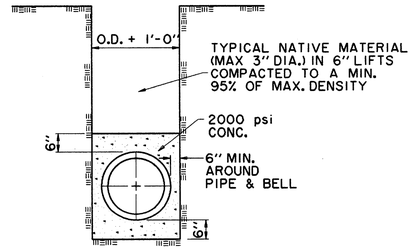

CONC. ENCASEMENT WATER MAIN

N.T.S.

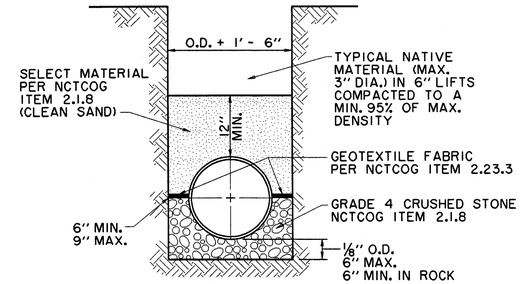

PVC EMBEDMENT

N.T.S.

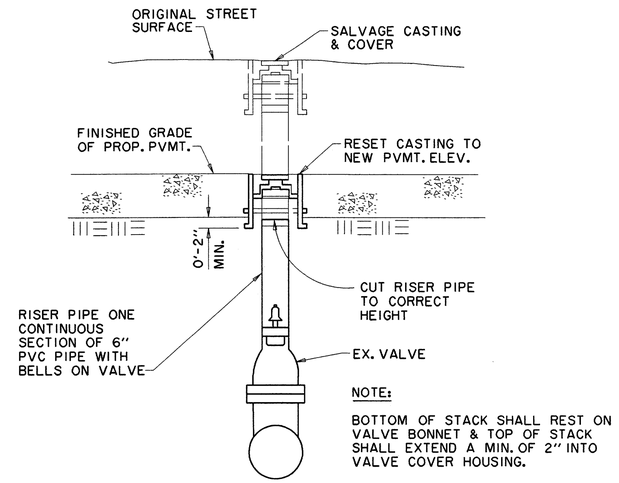

NOTE:

BOTTOM OF STACK SHALL REST ON VALVE BONNET & TOP OF STACK SHALL EXTEND A MIN. OF 2" INTO VALVE COVER HOUSING.

VALVE COVER & RISER PIPE ADJUSTMENT

N.T.S.

FIRE HYDRANT TO BE "MUELLER" TRAFFIC MODEL W/6" MECHANICAL JOINT CONNECTION OR APPROVED EQUAL W/5¼" VALVE OPENING W/BARREL APPROX. 7" INSIDE DIAMETER. HYDRANT BODY SHALL BE COATED W/2 COATS OF ALUMINUM PAINT OVER TWO COATS OF PRIMER. BONNET TO FLANGE & NOZZLE CAPS SHALL BE PAINTED BY COLOR CODE FOR MAIN SIZE ACCORDING TO CITY STANDARDS. ALL HYDRANTS SHALL BE EQUIPPED WITH A BREAKAWAY FLANGE & SHALL BE NO CLOSER THAN 3' TO ANY SURFACE OBSTRUCTION. (150 psi WORKING PRESSURE - AWWA STD. C-502-73 OR LATEST REVISION) USE "MUELLER CENTURION"

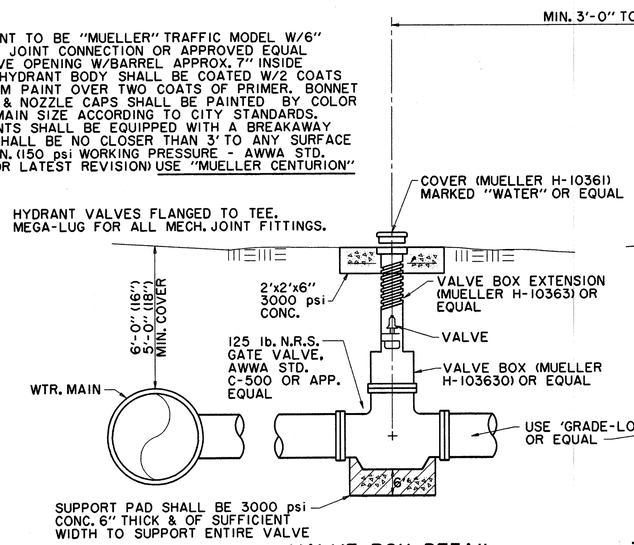

VALVE BOX DETAIL

N.T.S.

(SEE PLANS FOR "MAIN SIZE")

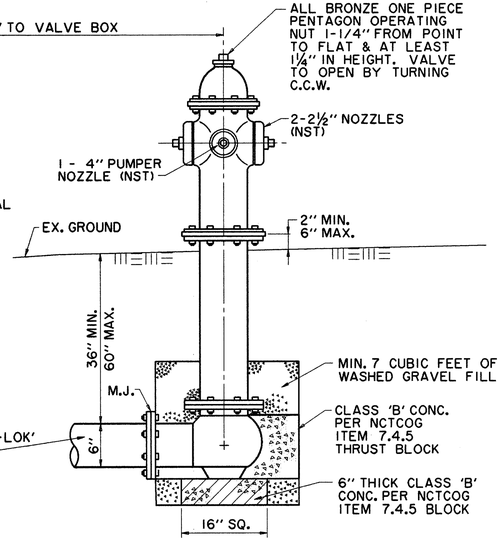

TYPICAL FIRE HYDRANT INSTALLATION

N.T.S.

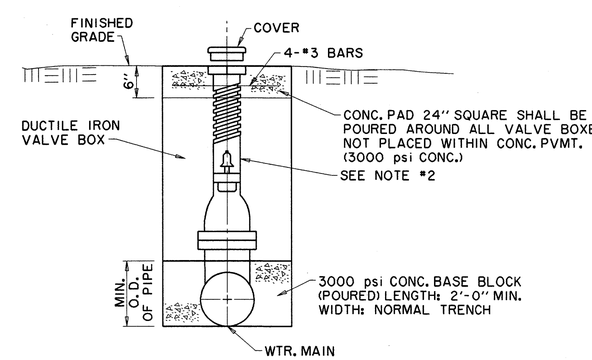

TYPICAL VALVE SETTING & BOX

N.T.S.

GATE VALVES AND VALVE BOXES:

1. GATE VALVES SHALL BE IRON BODY, BRONZE OR BRASS MOUNTED, NON-RISING STEM, RESILIENT WEDGE TYPE (SUCH AS MUELLER A-2360). VALVES SHALL BE OF EQUAL OR GREATER PRESSURE CLASS THAN THE PIPING IN WHICH THEY ARE TO BE INSTALLED.
2. VALVE BOXES SHALL BE CAST IRON AND SHALL BE OF SUFFICIENT LENGTH AND DIAMETER TO OPERATE ALL VALVES BURIED IN THE GROUND. COVERS SHALL BE MARKED ''WATER''. THE BOXES SHALL REST ON THE VALVE AND BE ADJUSTED SO THAT THE COVER MAY SET FLUSH WITH THE FINISHED GRADE.
3. VALVE DEPTH GREATER THAN 4 FEET REQUIRES VALVE EXTENSION STEM.

GENERAL NOTES:

1. ℄ OF F.H. BARREL SHALL BE NOT LESS THAN 6.0' OR MORE THAN 9.0' FROM BACK OF CURB OR EDGE OF DRIVING LANE.
2. DO NOT SET F.H. IN AN EXISTING OR PROPOSED SIDEWALK, UNLESS OTHERWISE NOTED.
3. ALL F.H. TEES SHALL BE FLANGED TEE WITH ANCHORING ON THE BRANCH WITH FLANGED x M.J., M.J. 6'' VALVE.
4. SET F.H. ON THE LOT LINE EXTENDED WHEN POSSIBLE. (NOT APPLICABLE TO THIS PROJECT)
5. SEE SPECIFICATION FH-95-1 FOR ADDITIONAL REQUIREMENTS.

NOTES:

1. GATE VALVES SHALL BE IN ACCORDANCE WITH AWWA STANDARD C-509-80 OR LATEST THEREOF. ALL VALVES SHALL BE ''MUELLER'' OR APPROVED EQUAL.
2. A PERMANENTLY ATTACHED VALVE EXTENSION STEM SHALL BE REQUIRED FOR ANY VALVE ON WHICH THE OPERATING NUT IS LOCATED IN EXCESS OF 4 FEET BELOW THE TOP OF VALVE BOX. THIS EXTENSION SHALL BE OF SUFFICIENT LENGTH TO INSURE THAT ITS TOP IS WITHIN 4' OF VALVE BOX LID. MANUFACTURED VALVE STACK DUCTILE IRON PIPE TO BE USED FOR EXTENSION GREATER THAN 4'-0''. BELL END OF STACK TO BE FITTED OVER VALVE. VALVE AND VALVE STACK IS TO BE POLY WRAPED.
3. VALVES SHALL BE OF DUCTILE IRON W/RUBBER ENCAPSULATED DISK. BOLTS SHALL BE STAINLESS STEEL OF SAME SIZE ON EACH VALVE.
4. ALL WATER COVERS SHALL BE MARKED ''WATER''.

STATE OF TEXAS
DAVID E. MEYERS
81512
REGISTERED PROFESSIONAL ENGINEER
1/5/04

DATE	DESCRIPTION	REF NO.
1/05/04	ISSUED FOR CONSTRUCTION	
11/07/03	ISSUED FOR BID	

WATER DETAILS

SPECTRUM DRIVE EXTENSION

TOWN OF ADDISON, TEXAS

Huitt - Zollars, Inc.
3131 Mckinney Ave., Suite 600, Dallas, TX 75204
Phone (214) 871-3311/Fax (214) 871-0757

DESIGN	DRAWN	APPR.	SCALE	DATE	PROJECT NO.	NO.
HZI	HZI	DEM	N.T.S.	NOV 2003	01-3220-01	34

h:\proj\01322001\dgn\32200ICDT07.DGN

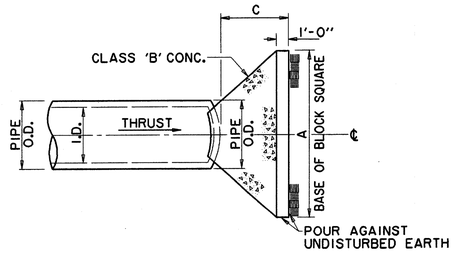

PLAN OF PLUG THRUST BLOCK
N.T.S.

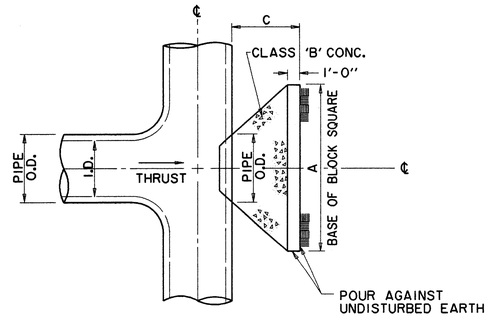

PLAN OF TEE THRUST BLOCK
N.T.S.

			EARTH		ROCK	
I.D. (IN.)	THRUST TONS	C. FT.	A. FT.	VOL. C.Y.	A. FT.	VOL. C.Y.
4, 6, 8	5.1	1.5	2.5	0.3	2.0	0.2
10, 12	11.3	1.5	3.5	0.6	2.5	0.3
16, 18	25.5	2.0	5.5	1.6	4.0	0.9
24	45.2	2.5	7.0	3.1	5.0	1.7

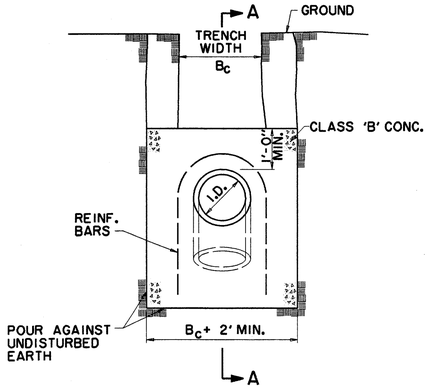

ELEVATION B-B
N.T.S.

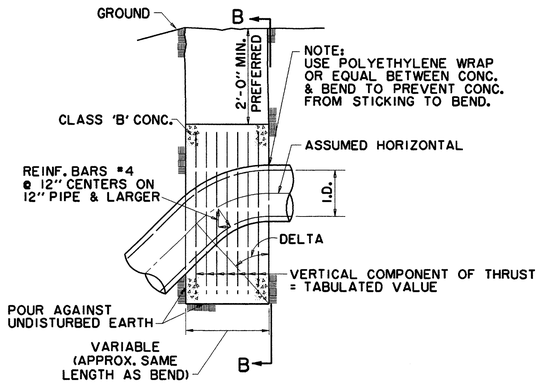

SECTION A-A
N.T.S.

VERTICAL BENDS

	11.25°		22.50°		30°		45°		67.50°		90°		
I.D. (IN.)	THRUST TONS	VOL. C.Y.	THRUST TONS	VOL. C.Y.	THRUST TONS	VOL. C.Y.	THRUST TONS	VOL. C.Y.	THRUST TONS	VOL. C.Y.	THRUST TONS	VOL. C.Y.	I.D. (IN.)
4, 6, 8	1.0	0.5	2.0	1.0	2.5	1.3	3.6	1.8	4.6	2.3	5.0	2.5	4, 6, 8
10, 12	2.2	1.1	4.3	2.2	5.7	2.8	8.0	4.0	10.5	5.2	11.3	5.7	10, 12
16, 18	5.0	2.5	9.7	4.9	12.7	6.4	18.0	9.0	23.5	11.8	25.5	12.7	16, 18
24	8.2	4.4	17.3	8.7	22.6	11.3	32.0	16.0	41.9	20.9	45.2	22.6	24

GENERAL NOTES FOR ALL THRUST BLOCKS

1. ALL CALCULATIONS ARE BASED ON INTERNAL PRESSURE OF 200 P.S.I. FOR 24'' I.D. PIPE AND SMALLER AND 150 P.S.I. ON 30'' I.D. AND LARGER.
2. VOLUMES OF VERTICAL BEND THRUST BLOCKS ARE NET VOLUMES OF CONCRETE TO BE FURNISHED. THE CORRESPONDING WEIGHT OF THE CONCRETE (CLASS F) IS EQUAL TO OR GREATER THAN THE VERTICAL COMPONENT OF THRUST ON THE VERTICAL BEND.
3. WALL THICKNESS (T) ASSUMED HERE FOR ESTIMATING PURPOSES ONLY.
4. CONCRETE FOR BLOCKING SHALL BE CLASS B CONCRETE.
5. DIMENSIONS MAY BE VARIED AS REQUIRED BY FIELD CONDITIONS AND AS DIRECTED BY THE ENGINEER. THE VOLUME OF CONCRETE BLOCKING SHALL NOT BE LESS THAN SHOWN HERE.
6. CONCRETE BLOCKING SHALL BE IN PLACE A MINIMUM OF 4 DAYS PRIOR TO TESTING THE PIPELINE.

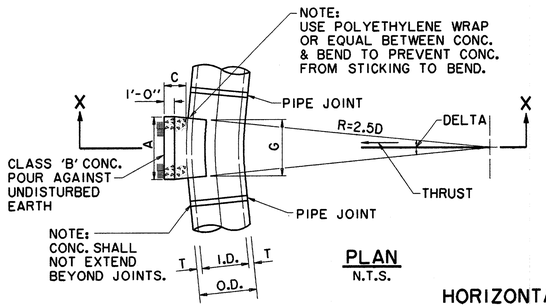

PLAN
N.T.S.

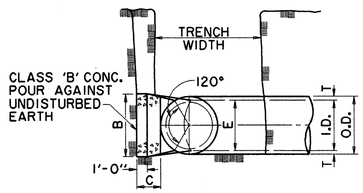

SECTION X-X
N.T.S.

I.D. (IN.)	T. IN.	C 11.25° FT.	C 22.50°+ FT.	E. FT.
4, 6, 8	0.4	1.5	1.5	0.9
10, 12	0.5	1.5	1.5	1.2
16, 18	0.6	1.5	1.5	1.6
24	0.9	1.5	1.5	2.1

HORIZONTAL BENDS

DELTA	11.25°								22.50°								DELTA
			EARTH			ROCK					EARTH			ROCK			
I.D. (IN.)	G. FT.	THRUST TONS	A. FT.	B. FT.	VOL. C.Y.	A. FT.	B. FT.	VOL. C.Y.	G. FT.	THRUST TONS	A. FT.	B. FT.	VOL. C.Y.	A. FT.	B. FT.	VOL. C.Y.	I.D. (IN.)
4, 6, 8	0.4	1.0	1.0	1.5	0.1	1.0	1.0	0.1	0.8	2.0	1.5	1.5	0.1	1.0	1.0	0.1	4, 6, 8
10, 12	0.6	2.2	1.5	1.5	0.1	1.0	1.5	0.1	1.1	4.4	2.0	2.5	0.3	1.5	1.5	0.1	10, 12
16, 18	0.8	5.0	2.0	2.5	0.3	1.5	2.0	0.2	1.6	9.9	3.0	3.5	0.6	2.0	2.5	0.3	16, 18
24	1.1	8.9	3.0	3.5	0.5	1.5	3.0	0.3	2.2	17.7	4.0	4.5	1.0	3.0	3.5	0.5	24
DELTA	45°								90°								DELTA
4, 6, 8	0.4	3.9	2.0	2.0	0.2	1.5	1.5	0.1	0.4	5.0	5.0	1.5	0.4	2.0	2.0	0.2	4, 6, 8
10, 12	0.5	8.7	3.5	2.5	0.5	2.0	2.5	0.3	0.5	6.5	6.5	2.5	1.0	3.5	2.5	0.5	10, 12
16, 18	0.6	19.5	4.5	4.5	1.2	3.0	3.5	0.6	0.6	9.0	9.0	4.0	2.4	4.5	4.0	1.0	16, 18
24	0.9	34.6	8.0	4.5	2.3	4.5	4.0	1.1	0.9	14.5	14.5	4.5	5.0	8.0	4.0	2.1	24

GENERAL NOTES

1. UNPLASTICIZED POLYVINYL CHLORIDE (PVC) WATER PIPE SHALL MEET OR EXCEED REQUIREMENTS OF AWWA C909 PVC PIPE WITH CAST IRON OUTSIDE DIMENSIONS. PIPE SHALL BE LISTED BY UNDERWRITER LABORATORIES AND SHALL BE APPROVED FOR USE IN CITIES AND TOWNS OF THE STATE OF TEXAS BY THE STATE BOARD OF INSURANCE.
2. PVC WATER PIPE SHALL BE FURNISHED WITH A RUBBER RING AT EACH JOINT AND AN INTEGRAL THICKENED BELL AS A PART OF EACH JOINT. THE PIPE CLASS SHALL BE MINIMUM CLASS 150 DR 18 WHICH REFERS TO THE MAXIMUM HYDROSTATIC PRESSURE IN NORMAL OPERATIONS. LAYING LENGTHS SHALL BE 20 FEET+/-. PIPE AND FITTINGS MUST BE ASSEMBLED WITH A NONTOXIC LUBRICANT.
3. FITTINGS FOR PVC WATER PIPE SHALL BE GRAY IRON OR DUCTILE IRON OF THE BELL AND SPIGOT, OR MECHANICAL JOINT TYPE AND SHALL BE CLASS 250 IN ACCORDANCE WITH AWWA C110-77 (ANSI.10).
4. UNLESS OTHERWISE SPECIFIED ON PLANS OR SHOWN IN PROFILES, PVC WATER PIPE SHALL BE INSTALLED TO CLEAR ALL UTILITY LINES AND SHALL HAVE A MINIMUM COVER OF 36 INCHES BELOW THE LOWEST GRADE OF THE STREET AS PER CITY CODE.
5. 4''-12'' R S GATE VALVES SHALL BE IN ACCORDANCE WITH AWWA STANDARD C-500.
6. A PERMANENTLY ATTACHED VALVE EXTENSION STEM SHALL BE REQUIRED FOR ANY VALVE WHOSE OPERATING NUT IS LOCATED IN EXCESS OF 4 FEET BELOW THE TOP OF VALVE BOX. THIS EXTENSION SHALL BE OF SUFFICIENT LENGTH TO INSURE THAT ITS TOP IS WITHIN 4' OF VALVE BOX LID.
7. DUCTILE IRON OR C-900 PVC PIPE SHALL BE USED FOR VALVE STACKS WITH VALVE BOX CASTING.
8. ALL ANCHOR BOLTS SHALL BE GALVANIZED.
9. ALL WATEWR MAINS WILL BE INSTALLED WITH A LOCATION WIRE PER THE TOWN OF ADDISON REQUIREMENTS.
10. POLYWRAP ALL IRON FITTINGS AND VALVES.

DATE	DESCRIPTION	REF NO.
1/05/04	ISSUED FOR CONSTRUCTION	
11/07/03	ISSUED FOR BID	

WATER DETAILS

SPECTRUM DRIVE EXTENSION

TOWN OF ADDISON, TEXAS

Huitt - Zollars, Inc.
3131 Mckinney Ave., Suite 600, Dallas, TX 75204
Phone (214) 871-3311/Fax (214) 871-0757

DESIGN	DRAWN	APPR.	SCALE	DATE	PROJECT NO.	NO.
HZI	HZI	DEM	N.T.S.	NOV 2003	01-3220-01	35

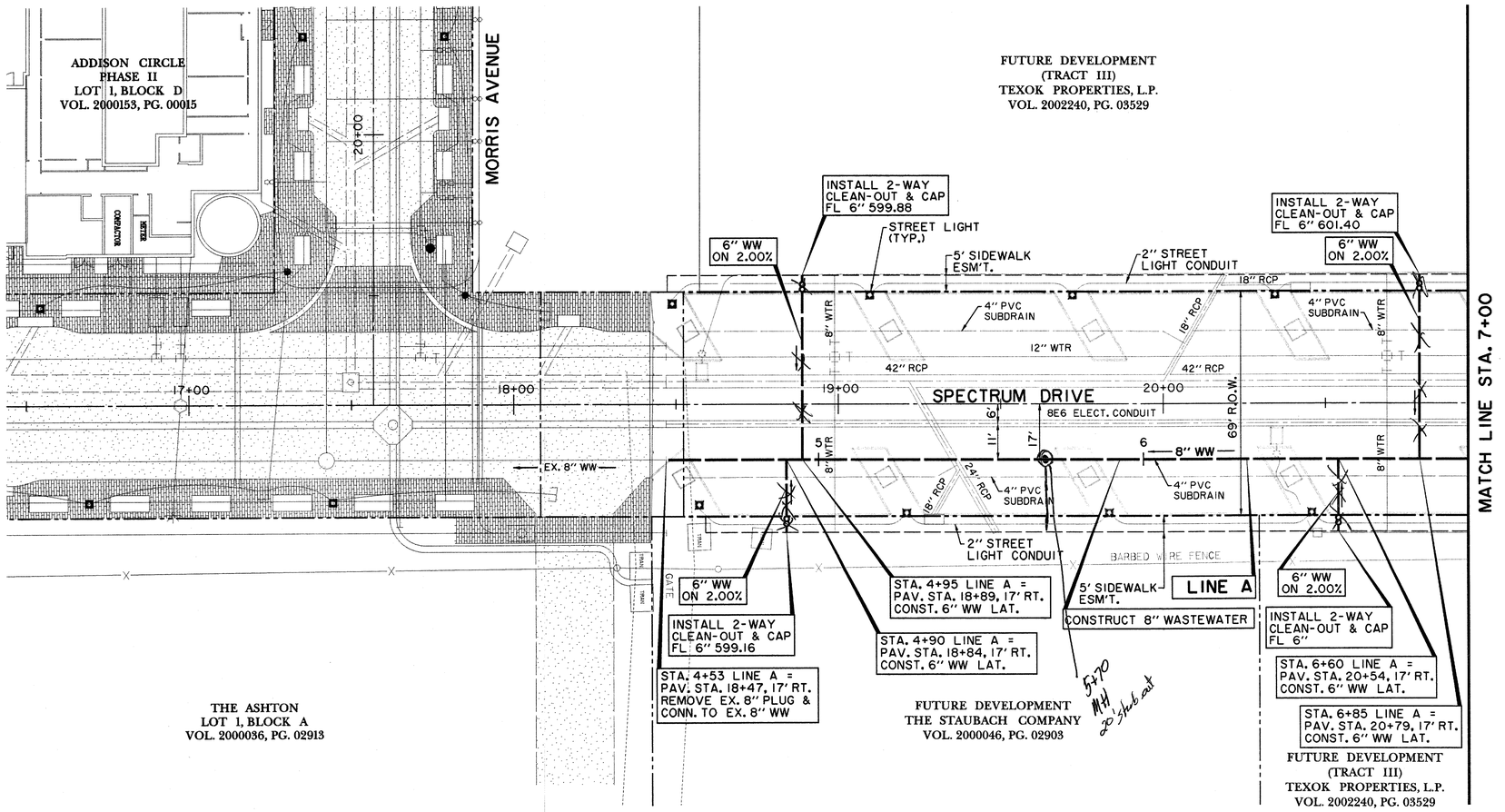

5+70 MH 20' stub out

9 total service laterals (6")

4 on this page.

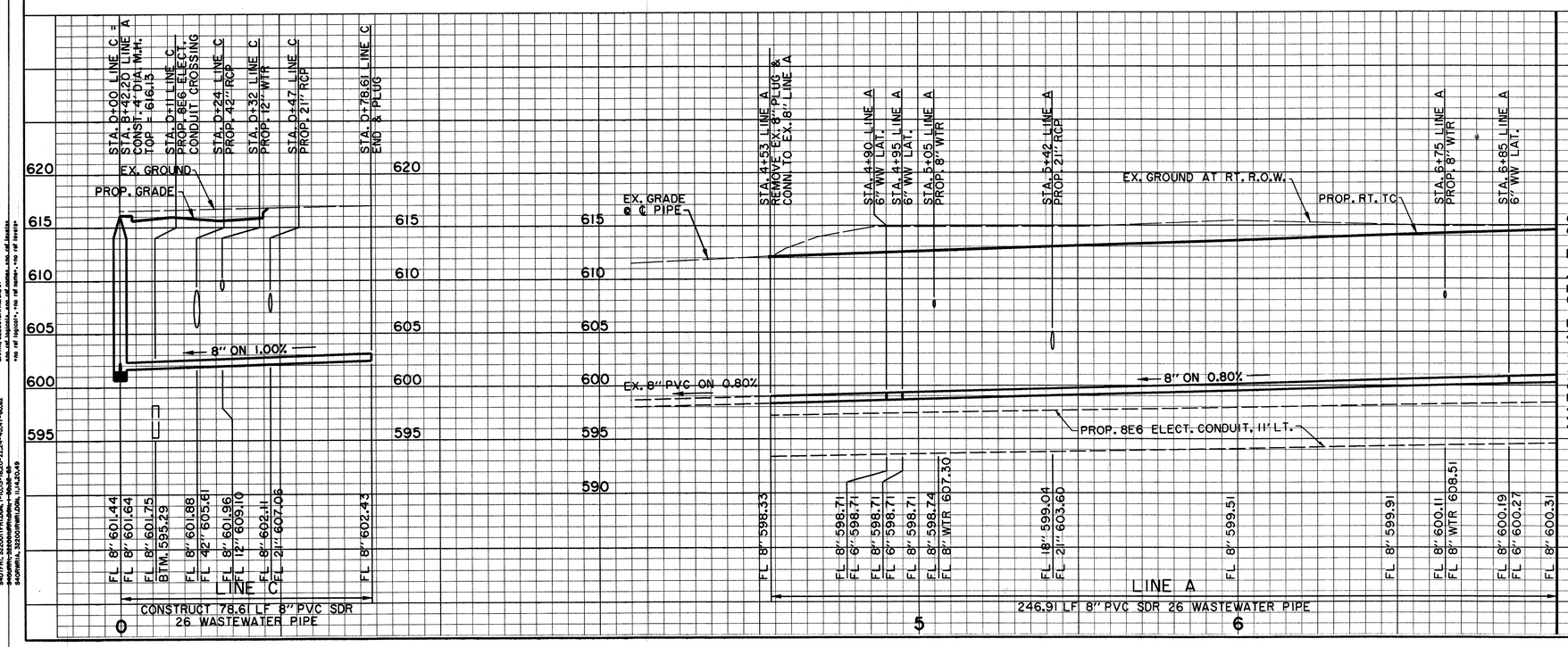

BENCHMARKS:

"□" CUT SOUTHWEST CORNER OF CURB INLET, WEST SIDE OF SPECTRUM DRIVE, ±30' NORTH OF MORRIS AVENUE.
ELEV. 611.84

"□" CUT ON TOP EAST END OF CURB INLET ON NORTH SIDE OF MORRIS AVENUE AND ±150' EAST OF QUORUM DRIVE CENTERLINE.
ELEV. 616.39

STATE OF TEXAS
DAVID E. MEYERS
81512
REGISTERED PROFESSIONAL ENGINEER
1/5/04

DATE	DESCRIPTION	REF NO.
1/05/04	ISSUED FOR CONSTRUCTION	
11/07/03	ISSUED FOR BID	

WASTEWATER PLAN & PROFILE
LINE A
SPECTRUM DRIVE EXTENSION

TOWN OF ADDISON, TEXAS

Huitt - Zollars, Inc.
3131 McKinney Ave., Suite 600, Dallas, TX 75204
Phone (214) 871-3311/Fax (214) 871-0757

DESIGN	DRAWN	APPR.	SCALE	DATE	PROJECT NO.	NO.
HZI	HZI	DEM	H: 1"=20' V: 1"=6'	NOV 2003	01-3220-01	36

h:\proj\01322001\dgn\322001US01.DGN

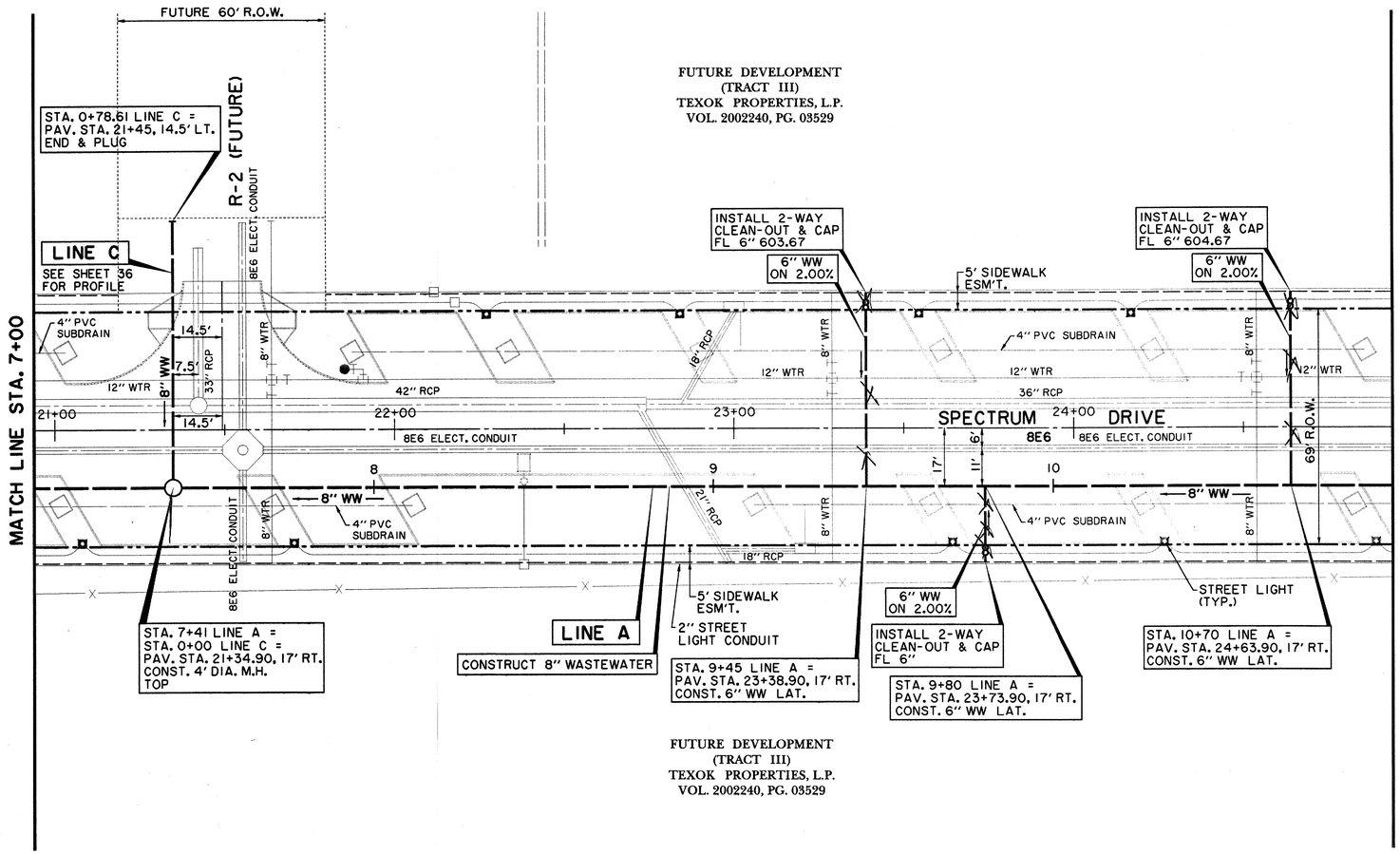

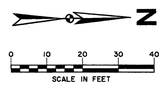

3-6" service laterals.

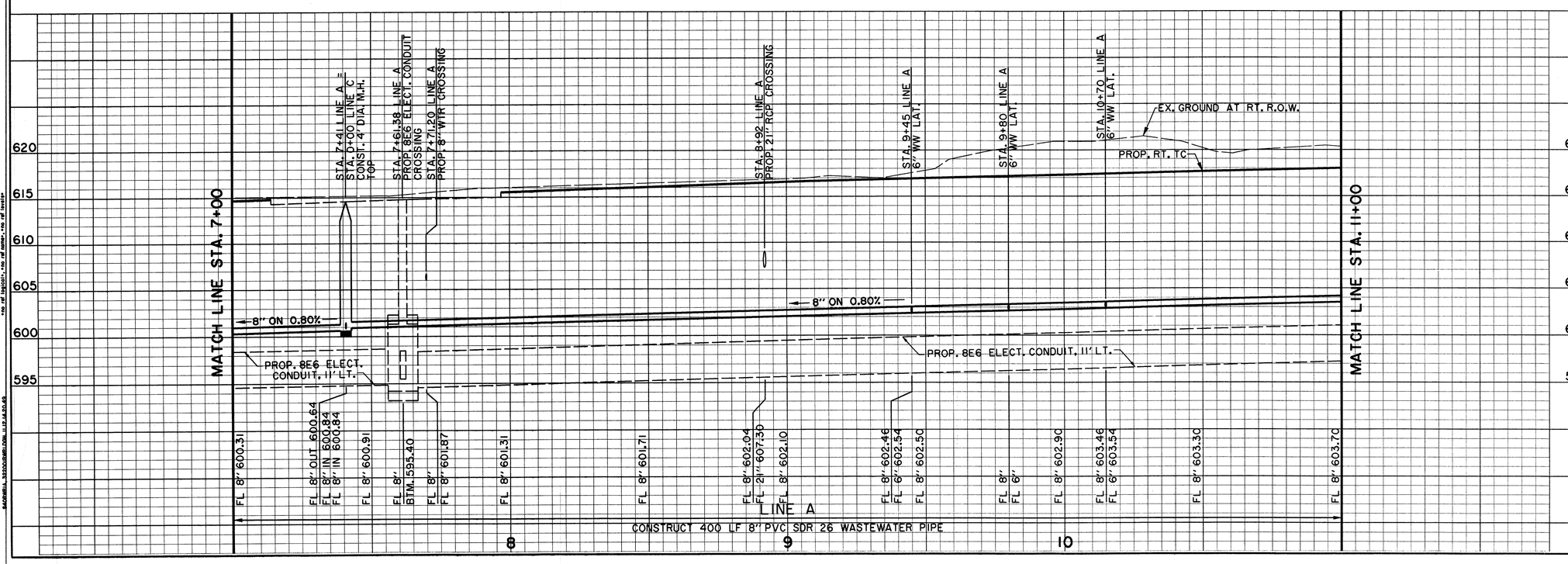

BENCHMARKS:

"□" CUT SOUTHWEST CORNER OF CURB INLET, WEST SIDE OF SPECTRUM DRIVE, ±30' NORTH OF MORRIS AVENUE. ELEV. 611.84

"□" CUT ON TOP EAST END OF CURB INLET ON NORTH SIDE OF MORRIS AVENUE AND ±150' EAST OF QUORUM DRIVE CENTERLINE. ELEV. 616.39

STATE OF TEXAS — DAVID E. MEYERS — 81512 — REGISTERED PROFESSIONAL ENGINEER — 1/5/04

DATE	DESCRIPTION	REF NO.
1/05/04	ISSUED FOR CONSTRUCTION	
11/07/03	ISSUED FOR BID	

WASTEWATER PLAN & PROFILE
LINE A
SPECTRUM DRIVE EXTENSION
TOWN OF addison, TEXAS

Hulitt - Zollars, Inc.
3131 Mckinney Ave., Suite 600, Dallas, TX 75204
Phone (214) 871-3311/Fax (214) 871-0757

DESIGN	DRAWN	APPR.	SCALE	DATE	PROJECT NO.	NO.
HZI	HZI	DEM	H: 1"=20' V: 1"=6'	NOV 2003	01-3220-01	37

h:\proj\01322001\dgn\322001US02.DGN

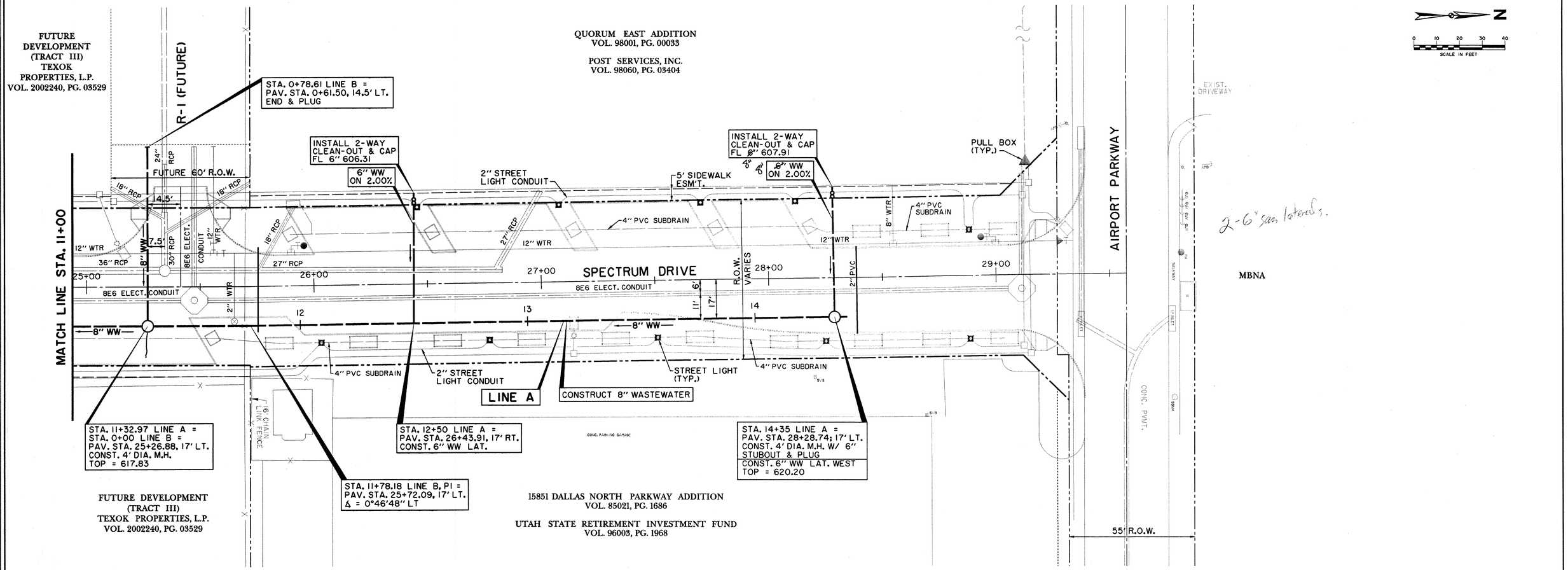

BENCHMARKS:

"□" CUT SOUTHWEST CORNER OF CURB INLET, WEST SIDE OF SPECTRUM DRIVE, ±30' NORTH OF MORRIS AVENUE. ELEV. 611.84

"□" CUT ON TOP EAST END OF CURB INLET ON NORTH SIDE OF MORRIS AVENUE AND ±150' EAST OF QUORUM DRIVE CENTERLINE. ELEV. 616.39

STATE OF TEXAS — DAVID E. MEYERS — 81512 — REGISTERED PROFESSIONAL ENGINEER — 1/5/04

DATE	DESCRIPTION	REF NO.
1/05/04	ISSUED FOR CONSTRUCTION	
11/07/03	ISSUED FOR BID	

WASTEWATER PLAN & PROFILE
LINE A
SPECTRUM DRIVE EXTENSION
TOWN OF ADDISON, TEXAS

Hulitt - Zollars, Inc.
3131 Mckinney Ave., Suite 600, Dallas, TX 75204
Phone (214) 871-3311/Fax (214) 871-0757

DESIGN	DRAWN	APPR.	SCALE	DATE	PROJECT NO.	NO.
HZI	HZI	DEM	H: 1"=20' V: 1"=6'	NOV 2003	01-3220-01	38

h:\proj\01322001\dgn\322001US03.DGN

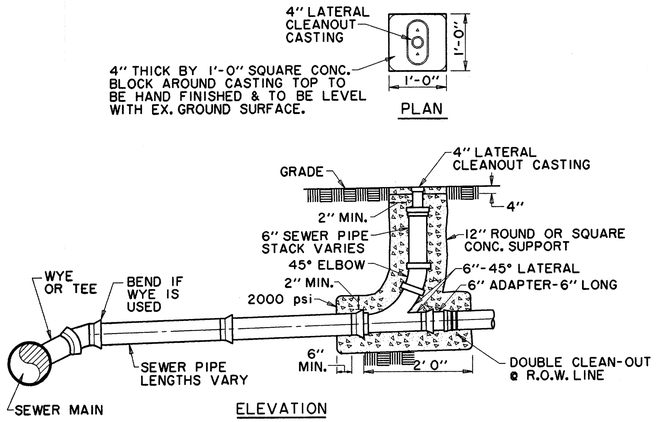

SANITARY SEWER CLEANOUT DETAIL

NTS

PVC SANITARY SEWER PIPE TO BE SDR 35 OR SDR 26 (AS NOTED ON PLANS) WITH INTEGRAL BELL. IT SHALL BE THE RESPONSIBILITY OF THE CONTRACTOR TO FIELD LOCATE HORIZONTALLY EACH SERVICE IN RELATION TO THE SANITARY SEWER STATIONING.

FIELD TIES ARE TO BE INCLUDED & RECORDED ON ALUMINIZED SANITARY SEWER TAPE. THIS TAPE, GREEN OR RED IN COLOR IS TO BE ATTACHED TO THE 6" SERVICE AT THE R.O.W. LINE AND BROUGHT TO THE SURFACE TO BE USED AS A PERMANENT MARKER.

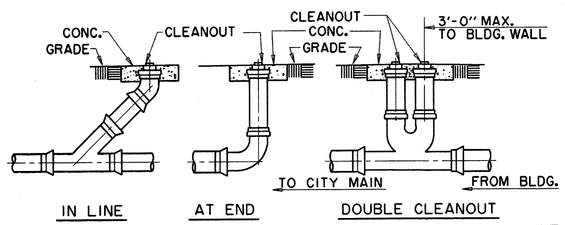

TYPICAL CLEANOUTS

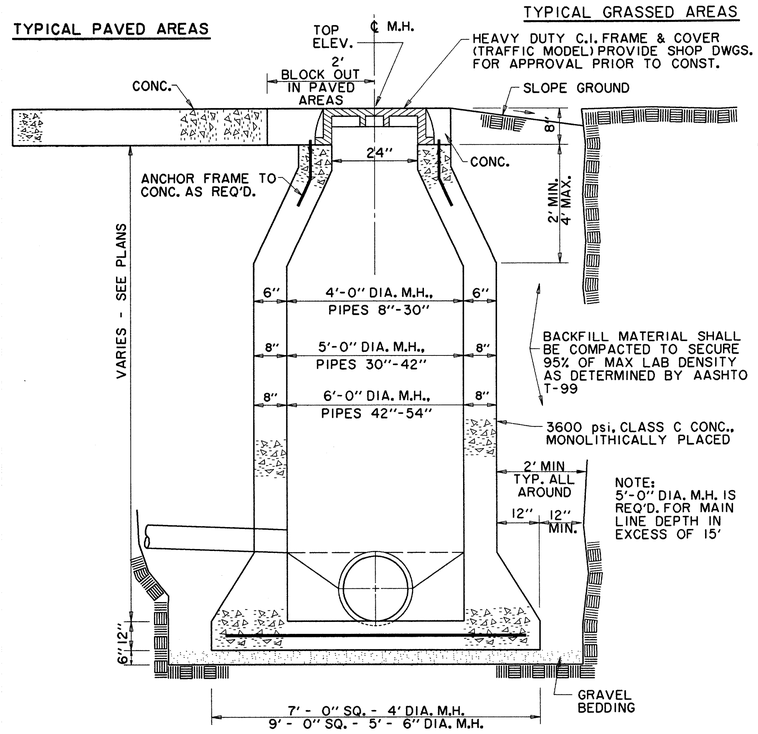

CAST IN PLACE MANHOLE

WHERE DROP M.H. IS REQ'D., USE INSIDE DROP CONNECTION AS PER TOWN OF ADDISON STANDARDS.

EMBEDMENT DETAILS FOR SANITARY SEWER

TABLE OF QUANTITIES OF 2000 psi CONCRETE, GRAVEL OR CRUSHED STONE IN CUBIC YARDS PER 100 LINEAR FEET FOR EACH CLASS EMBEDMENT

TABLE OF QUANTITIES PER 100 LINEAR FEET REINFORCED CONCRETE PIPE

SIZE OF PIPE IN INCHES I.D.	O.D. OF PIPE IN INCHES	TRENCH WIDTH IN INCHES	TRENCH WIDTH IN FEET	CLASS 1 EMBEDMENT CRUSHED STONE	CLASS 2 EMBEDMENT CONCRETE	CLASS 3 EMBEDMENT CONCRETE	CONCRETE ENCASEMENT
12	16.00	32	2.67	4.1	6.5	4.8	15.8
15	19.50	36	3.00	4.8	7.8	6.4	19.2
18	23.00	39	3.25	5.7	9.2	8.2	21.2
21	26.50	43	3.58	6.9	11.0	10.2	24.9
24	30.00	46	3.83	8.3	13.1	12.4	28.7
27	33.50	51	4.25	10.3	16.1	14.4	32.8
30	37.00	57	4.75	12.7	20.1	17.0	34.8
33	40.50	62	5.17	15.1	23.8	19.3	39.2
36	44.00	67	5.58	18.0	28.6	22.1	43.8

TABLE OF QUANTITIES PER 100 LINEAR FEET-PVC PIPE (IN CUBIC YARDS)

SIZE OF PIPE IN INCHES I.D.	O.D. OF PIPE IN INCHES	TRENCH WIDTH IN INCHES	TRENCH WIDTH IN FEET	CLASS 4 EMBEDMENT CRUSHED STONE	CONCRETE ENCASEMENT
6	6.28	24	2.00	8.0	11.7
8	8.16	24	2.00	8.7	12.4
10	10.20	26	2.18	10.2	14.2
12	12.24	28	2.35	11.7	15.9
16	15.30	31	2.61	14.0	18.8
24		36	3.0		
30		42	3.5		

USE CLASS 2 EMBEDMENT UNLESS OTHERWISE NOTED

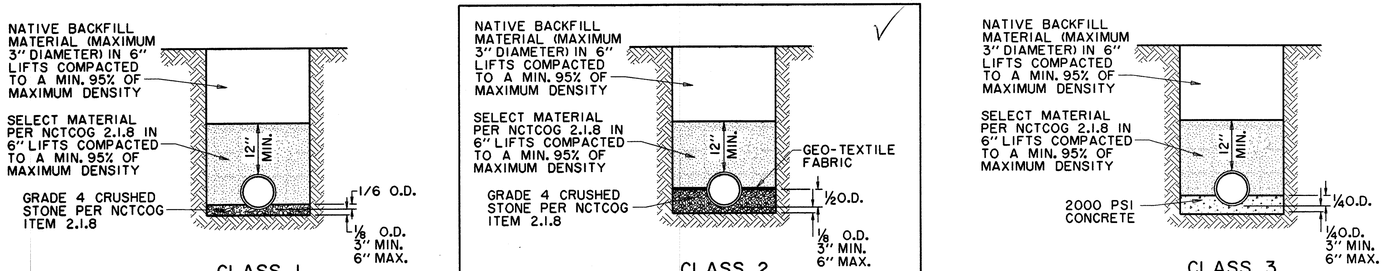

CLASS 1 EMBEDMENT
LOAD FACTOR = 1.5
N.T.S.

CLASS 2 EMBEDMENT
LOAD FACTOR = 1.9
N.T.S.

CLASS 3 EMBEDMENT
LOAD FACTOR = 2.8
N.T.S.

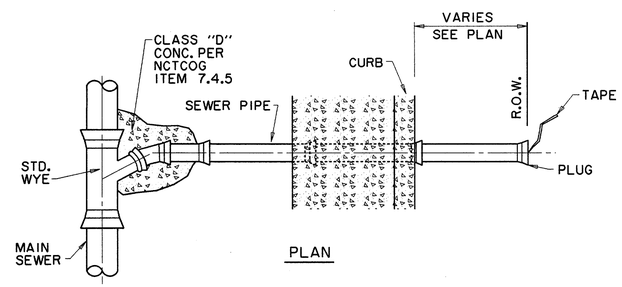

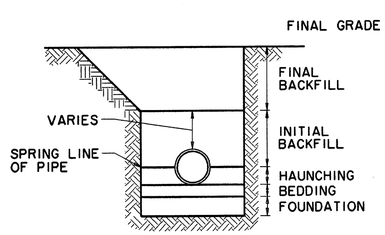

EMBEDMENT ZONES
NTS

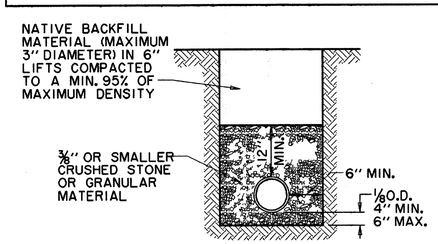

CLASS 4 EMBEDMENT
(SDR35 AND SDR26 P.V.C. PIPE ONLY)
LOAD FACTOR = 2.0
NTS

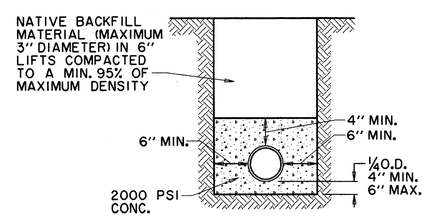

CONCRETE ENCASEMENT
LOAD FACTOR = 4.2
N.T.S.

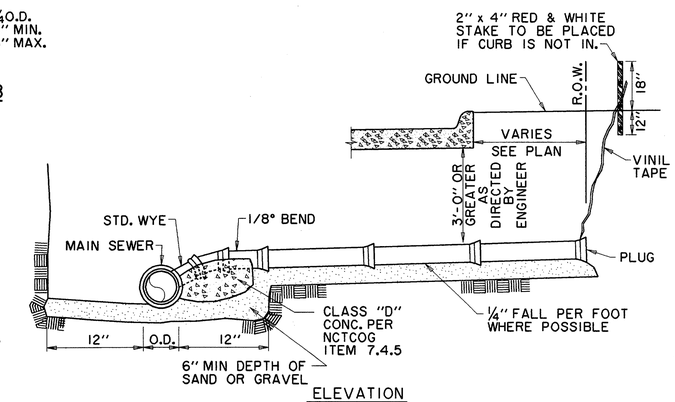

SANITARY SEWER SERVICE CONNECTION
NTS

TYPICAL NATIVE MATERIAL COMPACTED TO:
95% OF STANDARD PROCTOR DENSITY @ OPTIMUM MOISTURE 0 TO +3% UNDER PVMT.
95% OF STANDARD PROCTOR DENSITY @ OPTIMUM MOISTURE 0 TO +3% OUTSIDE CURB
LINES JETTING IS NOT ALLOWED BACKFILL TO BE COMPACTED IN 6"+/- LIFTS
TYPICAL NATIVE MATERIAL (MAX. 3" DIA.)

STATE OF TEXAS
DAVID E. MEYERS
81512
REGISTERED PROFESSIONAL ENGINEER
1/5/04

DATE	DESCRIPTION	REF NO.
1/05/04	ISSUED FOR CONSTRUCTION	
11/07/03	ISSUED FOR BID	

WASTEWATER DETAILS

SPECTRUM DRIVE EXTENSION

TOWN OF ADDISON, TEXAS

Huitt - Zollars, Inc.
3131 Mckinney Ave., Suite 600, Dallas, TX 75204
Phone (214) 871-3311/Fax (214) 871-0757

DESIGN	DRAWN	APPR.	SCALE	DATE	PROJECT NO.	NO.
HZI	HZI	DEM	N.T.S.	NOV 2003	01-3220-01	39

h:\proj\01322001\dgn\322001CDT09.DGN

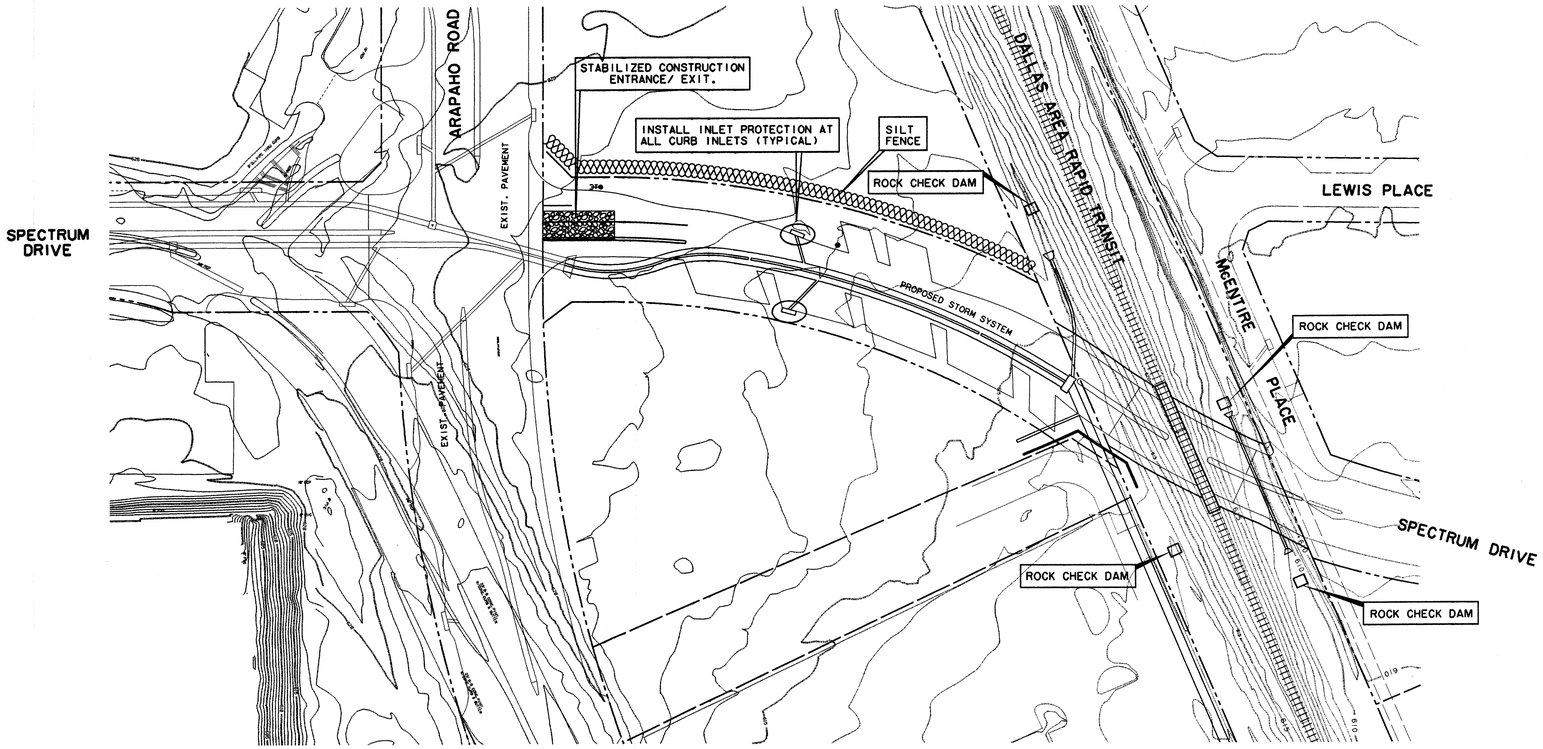

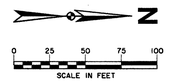

NOTES:

1. SEE DRAINAGE AREA MAP FOR DRAINAGE AREAS AND CALCULATIONS.

2. SEE EROSION CONTROL DETAILS FOR TYPES OF INLET PROTECTION.

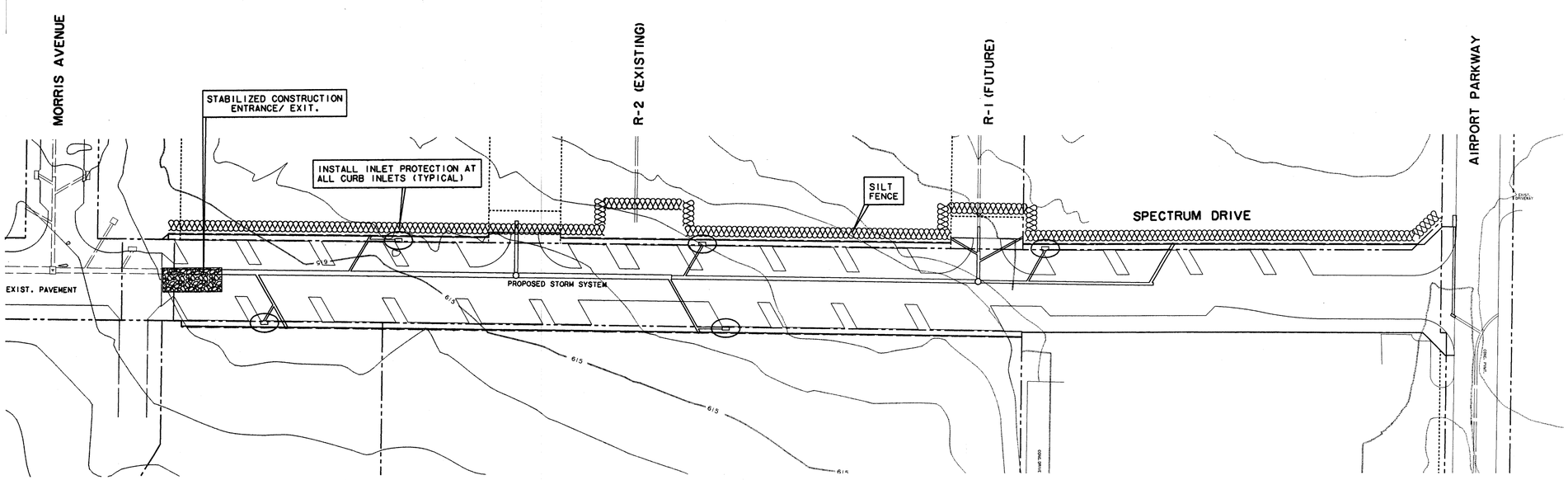

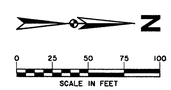

STATE OF TEXAS
DAVID E. MEYERS
81512
REGISTERED PROFESSIONAL ENGINEER
11/5/04

DATE	DESCRIPTION	REF NO.
1/05/04	ISSUED FOR CONSTRUCTION	
11/07/03	ISSUED FOR BID	

EROSION CONTROL PLAN

SPECTRUM DRIVE EXTENSION

TOWN OF ADDISON, TEXAS

Huitt - Zollars, Inc.
3131 Mckinney Ave., Suite 600, Dallas, TX 75204
Phone (214) 871-3311/Fax (214) 871-0757

DESIGN	DRAWN	APPR.	SCALE	DATE	PROJECT NO.	NO.
HZI	HZI	DEM	1"=50'	NOV 2003	01-3220-01	40

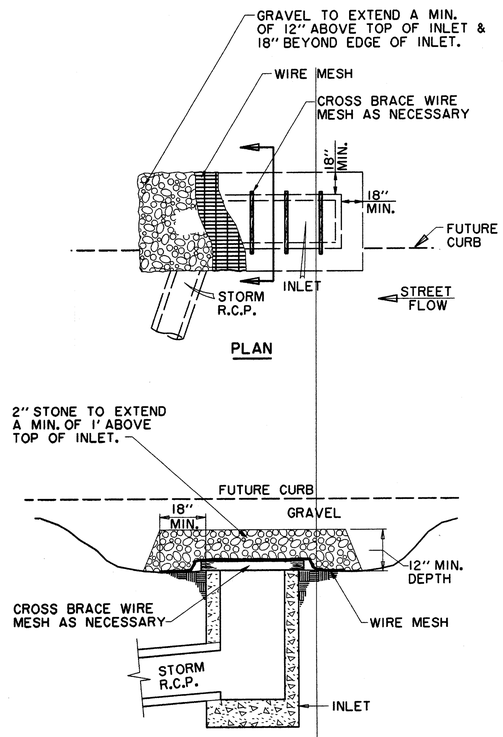

CROSS-SECTION

INLET PROTECTION WIRE MESH & GRAVEL

NCTCOG 02270.G
STORM WATER QUALITY
BEST MANAGEMENT PRACTICES
FOR CONSTRUCTION ACTIVITIES

DETAIL 'E'

N.T.S.

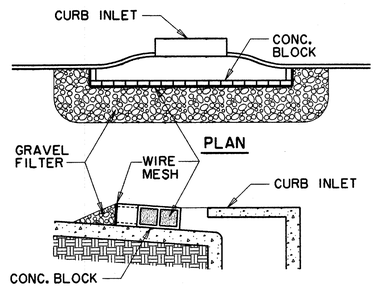

CROSS-SECTION

INLET PROTECTION BLOCK & GRAVEL

NCTCOG 02270.G
STORM WATER QUALITY
BEST MANAGEMENT PRACTICES
FOR CONSTRUCTION ACTIVITIES

DETAIL 'G'

N.T.S.

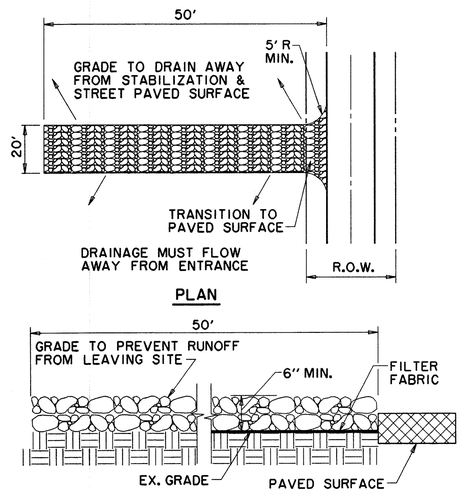

PROFILE

STABILIZED CONSTRUCTION ENTRANCE / EXIT

NCTCOG 02270.G
STORM WATER QUALITY
BEST MANAGEMENT PRACTICES
FOR CONSTRUCTION ACTIVITIES

DETAIL 'A'

N.T.S.

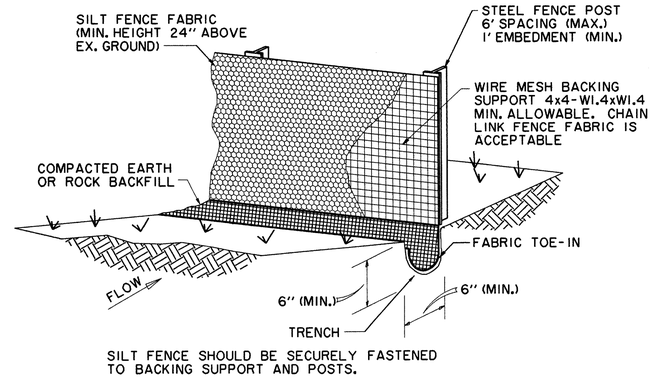

SILT FENCE SHOULD BE SECURELY FASTENED TO BACKING SUPPORT AND POSTS.

SILT FENCE

NCTCOG 02270.B
STORM WATER QUALITY
BEST MANAGEMENT PRACTICES
FOR CONSTRUCTION ACTIVITIES

DETAIL 'B'

N.T.S.

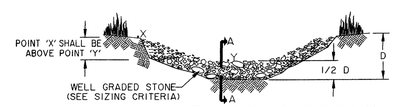

VIEW LOOKING UPSTREAM

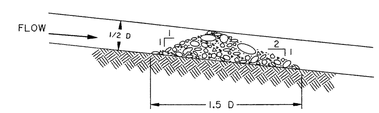

SECTION A - A

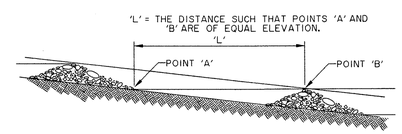

SPACING BETWEEN CHECK DAMS

ROCK CHECK DAM

N.T.S.

NOTES:

1. A NOTICE OF INTENT (N.O.I.) WILL BE PREPARED BY THE CONTRACTOR FOR THIS PROJECT IN ACCORDANCE WITH THE REQUIREMENTS OF THE N.P.D.E.S. GENERAL PERMIT FOR STORM WATER DISCHARGES ASSOCIATED WITH CONSTRUCTION.
2. ALL CONTRACTORS WILL COMPLY WITH THE REQUIREMENTS AND INTENT OF THE N.P.D.E.S. GENERAL PERMIT FOR STORM WATER DISCHARGES.
3. EACH CONTRACTOR SHALL SUBMIT A NOTICE OF INTENT (N.O.I.) FOR STORM WATER DISCHARGE PERMIT COVERAGE. THIS SUBMITTAL SHALL BE COORDINATED WITH THE TOWN AND SHALL OCCUR NO LESS THAN 48 HOURS PRIOR TO THE COMMENCEMENT OF ANY CONSTRUCTION ACTIVITY.
4. EACH CONTRACTOR SHALL OBTAIN AND SUBMIT TO TOWN A POLLUTION PREVENTION CERTIFICATION FROM EACH SUBCONTRACTOR WHOSE WORK IMPACTS THE STORM WATER POLLUTION PREVENTION PLAN (S.W.P.P.P.) PRIOR TO THE PERFORMANCE OF ANY WORK BY SAID SUBCONTRACTOR. THESE CERTIFICATIONS SHALL BECOME A PART OF THE STORM WATER POLLUTION PREVENTION PLAN.
5. CONTRACTOR SHALL INSTALL EROSION CONTROL MEASURES, AS INDICATED ON THE PLANS AND AS FIELD CONDITIONS WARRANT, PRIOR TO COMMENCING ANY CONSTRUCTION ACTIVITY. REPAIRS OR MODIFICATIONS TO THE MEASURES WILL BE MADE BY THE CONTRACTOR IF THE CONTROL MEASURES PROVE INEFFECTIVE OR IF ADDITIONAL CONTROL MEASURES ARE NECESSARY.
6. CONTRACTOR SHALL TAKE APPROPRIATE MEASURES TO PREVENT TRACKING OF MUD AND/OR SOILS ONTO EXISTING AND/OR NEW PAVEMENT. ANY TRACKING THAT OCCURS SHALL BE REMOVED IMMEDIATELY BY THE CONTRACTOR.
7. CONTRACTOR SHALL CONSTRUCT INLET PROTECTION FOR ALL INCOMPLETE CURB INLETS AND SHALL TAKE EVERY MEASURE TO KEEP SOILS AND SEDIMENTS FROM ENTERING THE STORM SEWER SYSTEM.
8. CONTRACTOR SHALL CONSTRUCT DROP INLET PROTECTION FOR ALL INCOMPLETE DROP INLETS AND SHALL TAKE EVERY MEASURE TO KEEP SOILS AND SEDIMENTS FROM ENTERINGTHE STORM SEWER SYSTEM.
9. AT A MINIMUM, PERIMETER CONTROLS SUCH AS SILT FENCE OR STRAW BALES SHALL BE INSTALLED AT ALL DOWN SLOPE BOUNDARIES AND AS WARRANTED WHERE PAVEMENT REMOVAL, UTILITY CONSTRUCTION, GRADING, OR OTHER CONSTRUCTION ACTIVITIES ARE TO BE PERFORMED. THE CONTRACTOR SHALL AT ALL TIMES TAKE SUCH MEASURES AS NECESSARY TO MINIMIZE OFFSITE TRACKING OR TRANSPORT OF SEDIMENT AND DEBRIS.
10. DAMAGE TO ADJACENT PROPERTY AND/OR TO RECEIVING WATERS CAUSED BY IMPROPERLY INSTALLED OR POORLY MAINTAINED EROSION CONTROL MEASURES WILL BE THE RESPONSIBILITY OF THE CONTRACTOR.
11. THE CONTRACTOR SHALL BE RESPONSIBLE FOR THE REMOVAL AND DISPOSAL OF ANY SILTATION CAUSED BY HIS OPERATIONS AND/OR FAILURE OF THE EROSION CONTROL MEASURES.
12. CONTRACTOR SHALL REMOVE AND PROPERLY DISPOSE OF ACCUMULATED SILT AND SEDIMENT FROM EROSION CONTROL MEASURES WHEN IT REACHES A DEPTH OF SIX (6) INCHES OR IMPAIRS THE EFFECTIVENESS OF THE MEASURES.
13. THE TOWN'S REPRESENTATIVE MAY INSPECT THE PROJECT EVERY SEVEN DAYS, AT A MINIMUM, AND AFTER EVERY RAINFALL OF ONE-HALF INCHES OR GREATER TO DETERMINE THE INTEGRITY AND EFFECTIVENESS OF THE EROSION CONTROL MEASURES. A WRITTEN INSPECTION REPORT MAY BE FILED WITH THE POLLUTION PREVENTION PLAN. THIS INSPECTION DOES NOT RELIEVE THE CONTRACTOR'S RESPONSIBILITY FOR INSPECTION AND MAINTENANCE OF THE EROSION CONTROL MEASURES OR HIS DUTY TO COMPLY WITH THE INTENT AND CONDITIONS OF THE N.P.D.E.S. GENERAL PERMIT.
14. ALL STOCKPILED SOILS WILL BE SURROUNDED BY A STRAW BALE DIKE, SILT FENCE, SEDIMENT CONTROL SWALE, OR EQUIVALENT MEASURE TO PROPERLY CONTROL SEDIMENT RUNOFF, AS APPROVED BY THE TOWN.
15. CONTRACTOR SHALL STABILIZE ANY AREA WHERE CONSTRUCTION ACTIVITY IS TO BE TEMPORARILY OR PERMANENTLY CEASED FOR MORE THAN 14 DAYS.
16. THE CONTRACTOR SHALL BE RESPONSIBLE FOR THE MINIMIZATION OF DUST PER NCTCOG BEST MANAGEMENT PRACTICES AND NPEDS..

STATE OF TEXAS
DAVID E. MEYERS
81512
REGISTERED PROFESSIONAL ENGINEER
11/5/04

DATE	DESCRIPTION	REF NO.
1/05/04	ISSUED FOR CONSTRUCTION	
11/07/03	ISSUED FOR BID	

EROSION CONTROL DETAILS

SPECTRUM DRIVE EXTENSION

TOWN OF ADDISON, TEXAS

Huitt - Zollars, Inc.
3131 Mckinney Ave., Suite 600, Dallas, TX 75204
Phone (214) 871-3311/Fax (214) 871-0757

DESIGN	DRAWN	APPR.	SCALE	DATE	PROJECT NO.	NO.
HZI	HZI	DEM	N.T.S.	NOV 2003	01-3220-01	41

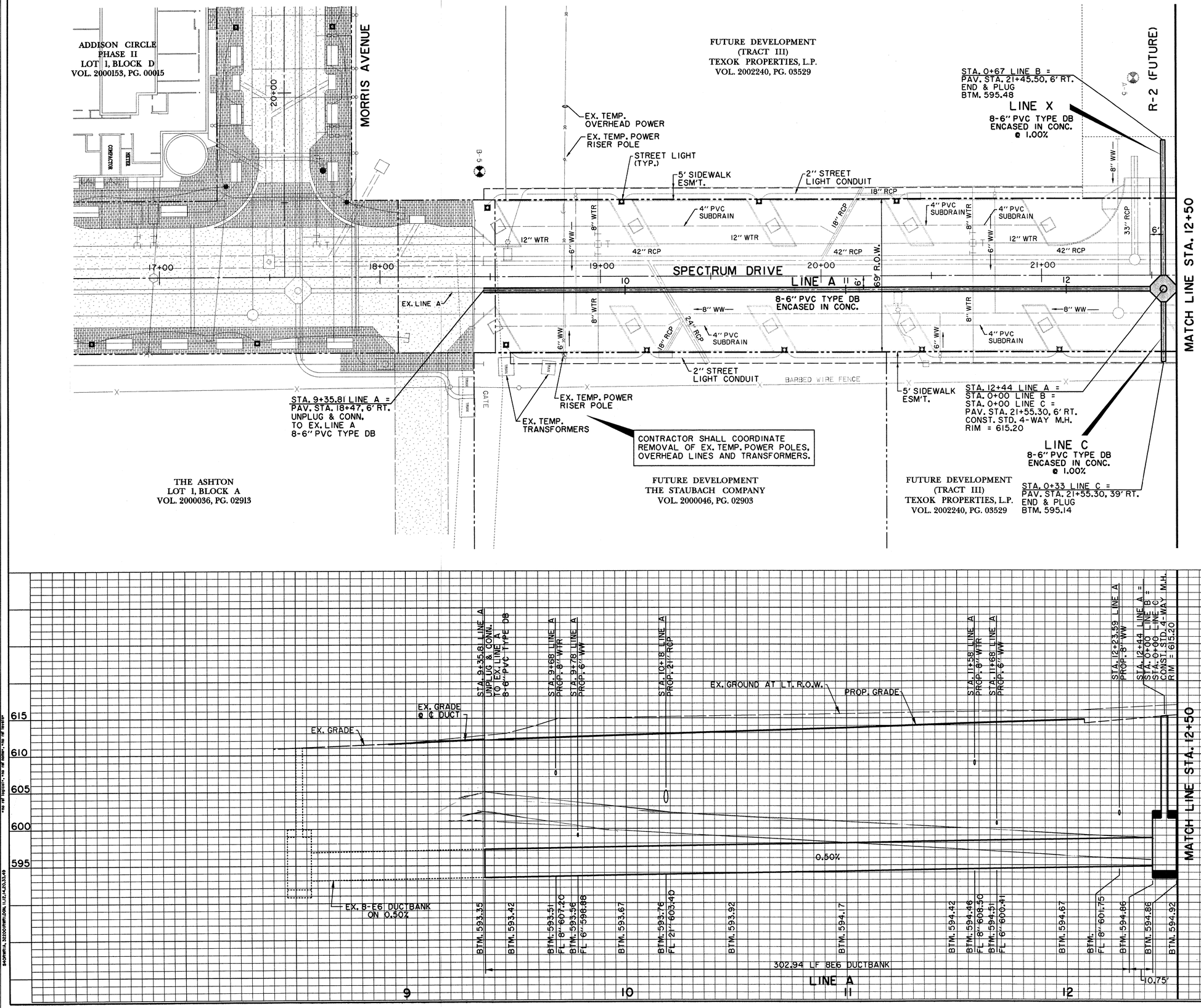

BENCHMARKS:

"□" CUT SOUTHWEST CORNER OF CURB INLET, WEST SIDE OF SPECTRUM DRIVE, ±30' NORTH OF MORRIS AVENUE. ELEV. 611.84

"□" CUT ON TOP EAST END OF CURB INLET ON NORTH SIDE OF MORRIS AVENUE AND ±150' EAST OF QUORUM DRIVE CENTERLINE. ELEV. 616.39

STATE OF TEXAS
DAVID E. MEYERS
81512
REGISTERED PROFESSIONAL ENGINEER
1/5/04

DATE	DESCRIPTION	REF NO.
1/05/04	ISSUED FOR CONSTRUCTION	
11/07/03	ISSUED FOR BID	

ELECTRICAL DUCTBANK PLAN & PROFILE
LINE A - STA. 9+35.81 TO STA. 12+50
SPECTRUM DRIVE EXTENSION

TOWN OF ADDISON, TEXAS

Huitt - Zollars, Inc.
3131 Mckinney Ave., Suite 600, Dallas, TX 75204
Phone (214) 871-3311 Fax (214) 871-0757

DESIGN	DRAWN	APPR.	SCALE	DATE	PROJECT NO.	NO.
HZI	HZI	DEM	H: 1"=20' V: 1"=6'	NOV 2003	01-3220-01	42

h:\proj\01322001\dgn\32200IUE03.DGN

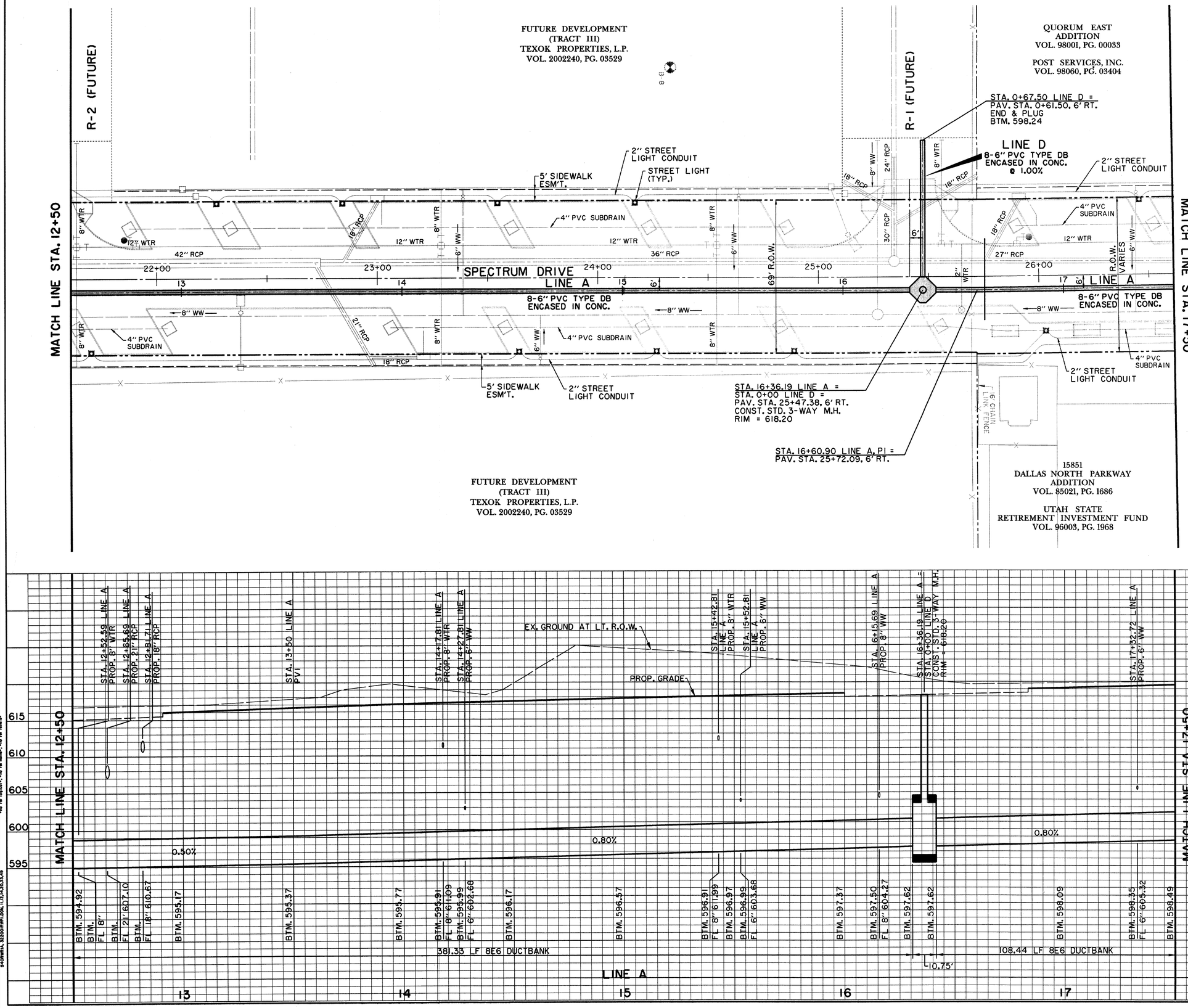

BENCHMARKS:

"□" CUT SOUTHWEST CORNER OF CURB INLET, WEST SIDE OF SPECTRUM DRIVE, ±30' NORTH OF MORRIS AVENUE.
ELEV. 611.84

"□" CUT ON TOP EAST END OF CURB INLET ON NORTH SIDE OF MORRIS AVENUE AND ±150' EAST OF QUORUM DRIVE CENTERLINE.
ELEV. 616.39

STATE OF TEXAS
DAVID E. MEYERS
81512
REGISTERED
PROFESSIONAL ENGINEER
1/5/04

DATE	DESCRIPTION	REF NO.
1/05/04	ISSUED FOR CONSTRUCTION	
11/07/03	ISSUED FOR BID	

ELECTRICAL DUCTBANK PLAN & PROFILE
LINE A - STA. 12+50 TO STA. 17+50
SPECTRUM DRIVE EXTENSION

TOWN OF ADDISON, TEXAS

Huitt - Zollars, Inc.
3131 Mckinney Ave., Suite 600, Dallas, TX 75204
Phone (214) 871-3311/Fax (214) 871-0757

DESIGN	DRAWN	APPR.	SCALE	DATE	PROJECT NO.	NO.
HZI	HZI	DEM	H: 1"=20' V: 1"=6'	NOV 2003	01-3220-01	43

h:\proj\01322001\dgn\32200IUE04.DGN

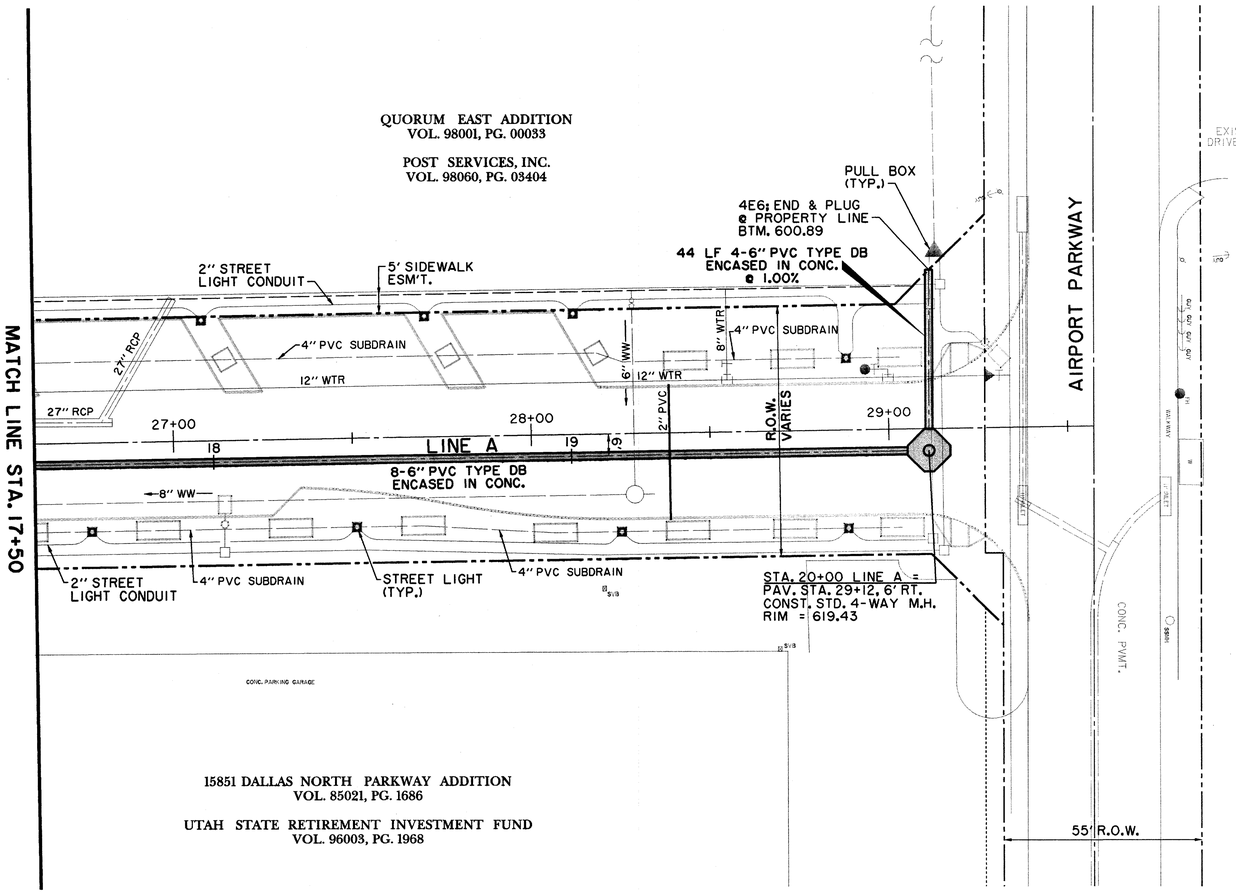

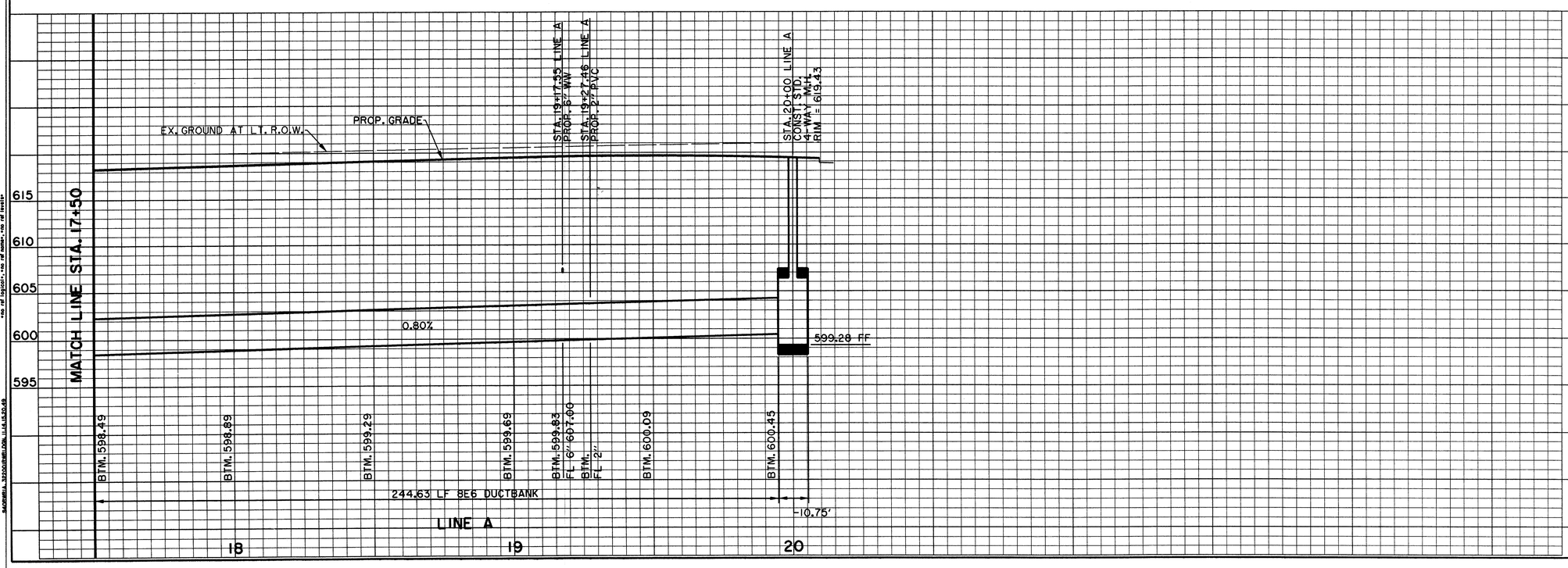

BENCHMARKS:

'□' CUT SOUTHWEST CORNER OF CURB INLET, WEST SIDE OF SPECTRUM DRIVE, ±30' NORTH OF MORRIS AVENUE. ELEV. 611.84

'□' CUT ON TOP EAST END OF CURB INLET ON NORTH SIDE OF MORRIS AVENUE AND ±150' EAST OF QUORUM DRIVE CENTERLINE. ELEV. 616.39

STATE OF TEXAS
DAVID E. MEYERS
81512
REGISTERED PROFESSIONAL ENGINEER
1/5/04

DATE	DESCRIPTION	REF NO.
1/05/04	ISSUED FOR CONSTRUCTION	
11/07/03	ISSUED FOR BID	

ELECTRICAL DUCTBANK PLAN & PROFILE
LINE 'A' - STA. 17+50.00 TO STA. 20+14.61

SPECTRUM DRIVE EXTENSION

TOWN OF ADDISON, TEXAS

Hulitt - Zollars, Inc.
3131 Mckinney Ave., Suite 600, Dallas, TX 75204
Phone (214) 871-3311/Fax (214) 871-0757

DESIGN	DRAWN	APPR.	SCALE	DATE	PROJECT NO.	NO.
HZI	HZI	DEM	H: 1"=20' V: 1"=6'	NOV 2003	01-3220-01	44

h:\proj\01322001\dgn\32200IUE05.DGN

DETAIL #21

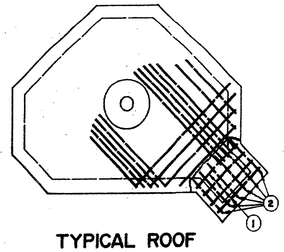

TYPICAL ROOF

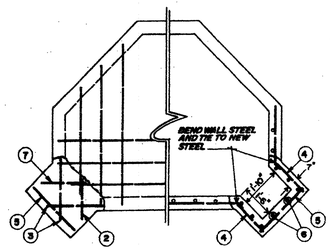

TYPICAL FLOOR / WALL

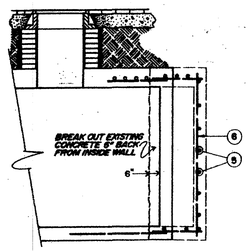

FLOOR / ROOF / WALL VIEW

ALL REINFORCING BARS #5						
ITEM	LENGTH		QUANTITY			
	FT.	IN.	FLOOR	WALLS	ROOF	TOTAL
1	2	9			4	4
2	2	3	1		6	7
3	3	0	2			2
4	2	0	2	18	2	22
5	2	11	1	6	1	8
6	7	3		8		8
7	2	5	1			1

DEEP PANELS ON NEW OR EXISTING TYPE
"C" AND "B" - *See Job Sketch*

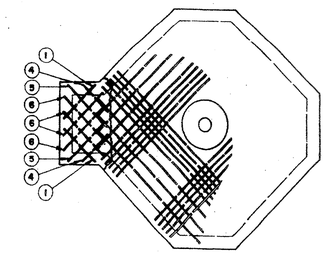

TYPICAL ROOF

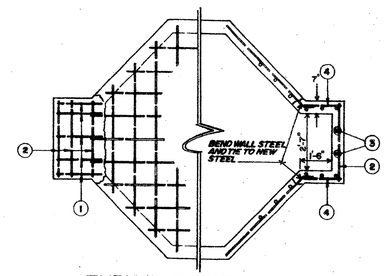

TYPICAL FLOOR / WALL

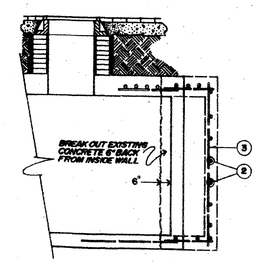

FLOOR / ROOF / WALL VIEW

ALL REINFORCING BARS #5						
ITEM	LENGTH		QUANTITY			
	FT.	IN.	FLOOR	WALLS	ROOF	TOTAL
1	2	3	5		2	7
2	3	6	3	7		10
3	7	3		8		8
4	1	9		14	2	16
5	2	6			2	2
6	2	9			4	4

DEEP PANELS ON NEW OR EXISTING TYPE
"B", "C" AND "D" - *See Job Sketch*

1/05/04 ISSUED FOR CONSTRUCTION

[redacted]

CD

TU ELECTRIC

DRAWN	CH.	APP.	APP.

REVISION DESCRIPTION | DATE | NO. | W.A.

UNIT ID | ESTIMATE | W.A.

DWG TYPE | LIST OF DRAWINGS

NETWORK UNDERGROUND
APPURTENANCE SHEETS
MISCELLANEOUS DETAILS

APP. PRN | APP. JES | ENG. JRC | CH. JRC | DWN. MED | DATE 05-12-92

SCALE (H=NO SCALE) (V=NO SCALE)

E-NUA-1
SHEET NO. [redacted]

TYPICAL CONDUIT INSTALLATION FOR PVC ENCASED MAJOR CONDUIT LINE

DETAIL #18

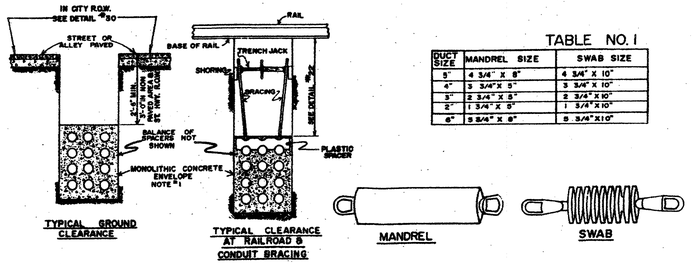

TYPICAL GROUND CLEARANCE

TYPICAL CLEARANCE AT RAILROAD & CONDUIT BRACING

TABLE NO. I

DUCT SIZE	MANDREL SIZE	SWAB SIZE
5"	4 3/4" X 8"	4 3/4" X 10"
4"	3 3/4" X 5"	3 3/4" X 10"
3"	2 3/4" X 5"	2 3/4" X 10"
2"	1 3/4" X 5"	1 3/4" X 10"
6"	5 3/4" X 8"	5 3/4" X 10"

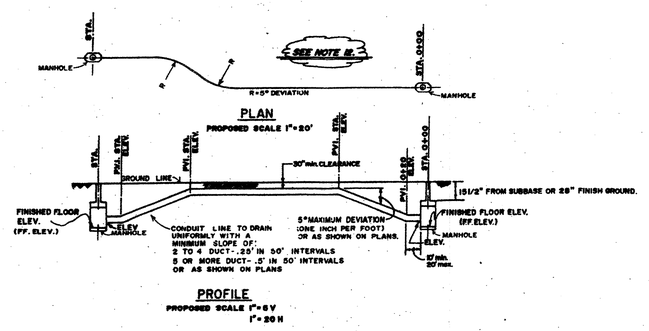

NOTES:

1. ALL SECTIONS OF THE CONDUIT WILL BE RUN IN A STRAIGHT LINE AS CONDITIONS WILL PERMIT. DEVIATIONS WILL BE LAID OUT BY THE POWER COMPANY ENGINEER.
2. THE CONDUIT & FITTINGS WILL BE COATED LIBERALLY WITH PVC CEMENT. PUSH CONDUIT AND FITTING TOGETHER UNTIL CONDUIT BUTTS AGAINST FITTING SHOULDER. TWIST CONDUIT 1/4 TURN TO ASSURE SMOOTH SPREADING OF CEMENT. NORMAL MIN. COVER TO BE 30".
3. WHEN COMPLETE, EACH CONDUIT OF A MAIN DUCT LINE WILL HAVE A MANDREL AND SWAB PULLED THROUGH THE ENTIRE LENGTH & EACH CONDUIT OF A LATERAL LINE WILL HAVE A SWAB PULLED THROUGH THE ENTIRE LENGTH TO CHECK FOR BLOCKAGES OR OTHER UNDESIRABLE CONDITIONS. SEE TABLE NO. I FOR MANDREL AND SWAB SIZE FOR CORRESPONDING CONDUIT SIZE.
4. ALL DITCH CUTS WILL BE IN ACCORDANCE WITH EXISTING SAFETY REGULATIONS IN EFFECT.
5. ALL CONDUIT RUNS ON I.H. & STATE HWY. R.O.W. WILL REQUIRE A MINIMUM OF 8" CONCRETE COVER FROM THE UPPERMOST DUCT. AND MIN. 36" COVER, FROM FINISH GRADE.
6. SEE PLANS FOR CONDUIT ARRANGEMENT.
7. FOR NUMBER, FORMATION, AND SIZE OF CONDUITS SEE JOB PLANS.
8. HIGH EARLY STRENGTH CEMENT PROHIBITED.
9. SHOW DITCH ELEVATION @ 50' INTERVALS & EACH GRADE CHANGE AND AT MANHOLE ENTRANCE.
10. SHOW MANHOLE FINISH FLOOR ELEVATION.
11. ALL CONDUIT TO BE TYPE II D.B. UNLESS OTHERWISE NOTED ON PLANS.
12. STATION EVERY 100 ft. IN PLAN VIEW AND EVERY SOIL WITH ELEVATION IN PROFILE PLUS STATION AND ELEVATION AT EACH GRADE CHANGE.

SECTIONS OF TYPICAL FORMATION

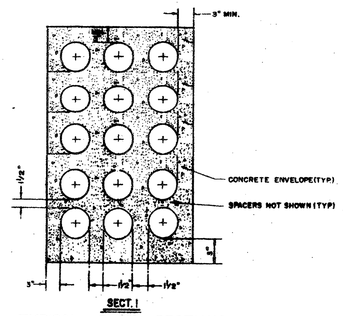

TYPICAL DUCT SECTIONS

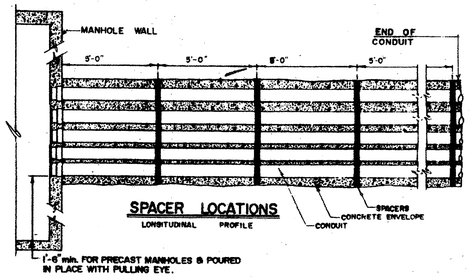

SPACER LOCATIONS

LONGITUDINAL PROFILE

TABLE 2

CONDUIT SIZE	OUTSIDE DIAMETER	TYPE				
2"	2.38"	PVC				
3"	3.50"	PVC				
4"	4.50"	PVC				
5"	5.56"	PVC				
6"	6.58"	PVC				
PVC CEMENT						

DETAIL #20

SEQUENCE OF CONSTRUCTION

STEP 1 : SUFFICIENT CONCRETE WILL BE REMOVED TO PERMIT TRENCH EXCAVATION.

STEP 2 : UPON COMPLETION OF THE INSTALLATION OF THE CONDUIT LINE, THE TRENCH WILL BE BACKFILLED AND COMPACTED TO THE REQUIRED DENSITY UP TO THE BASE OF PAVEMENT.

STEP 3 : THE CONCRETE PAVEMENT WILL BE SAWED TO A DEPTH OF APPROXIMATELY ONE THIRD OF THE DEPTH OF PAVEMENT, PARALLEL TO THE LINE OF TRENCH, ONE FOOT BACK OF SOLID GROUND. PAVING BREAKERS CAN THEN BE USED TO BREAK THE EXCESS CONCRETE.

STEP 4 : THE EXPOSED EDGES OF THE CONCRETE WILL BE CLEANED SO A GOOD BOND CAN BE OBTAINED WHEN VOID IS FILLED.

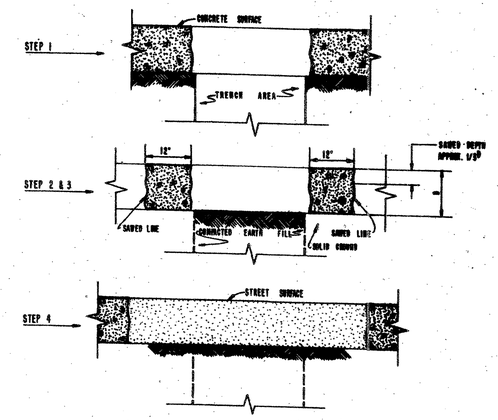

NOTE: ASPHALT DRIVING SURFACES;
SEQUENCE OF CONSTRUCTION ON CONCRETE STREETS WITH ASPHALT DRIVING SURFACES WILL BE THE SAME AS SEQUENCE, EXCEPT STEP 3, THE ASPHALT WILL BE CUT IN A STRAIGHT LINE USING METHODS ACCEPTABLE WITH THE CITY SPECIFICATIONS. SAWING OF THE CONCRETE WILL NOT BE REQUIRED.

STREET BREAKING AND REPLACEMENT DETAILS

DETAIL #19

CONCRETE SPECIFICATION

I. GENERAL

THESE SPECIFICATIONS APPLY TO MANHOLE, VAULT, AND DUCT LINE CONSTRUCTION ON THE UNDERGROUND SYSTEMS IN THE DOWNTOWN NETWORK. THE CONCRETE SHALL BE OF ONE OF THE CLASSES SPECIFIED ON THE DRAWINGS FOR THE TYPE OF WORK UNDER CONSTRUCTION. THE RATIO OF SAND TO GRAVEL SHALL BE USED SO AS TO OBTAIN AS DENSE AND ECONOMICAL CONCRETE AS POSSIBLE WITH THE MATERIALS AVAILABLE AND FOR THE CLASS OF WORK UNDER CONSTRUCTION, BUT IN NO CASE SHALL THE RATIO OF CEMENT TO THE INERT CONTENTS BE LESS THAN THE CLASS OF CONCRETE SPECIFIED.

II. SPECIFICATIONS FOR MATERIALS

A. CEMENT: THE CEMENT SHALL CONFORM TO "STANDARD SPECIFICATIONS FOR PORTLAND CEMENT" ASTM C-150 FOR TYPE I NORMAL PORTLAND CEMENT AND TYPE III, HIGH-EARLY-STRENGTH PORTLAND CEMENT. THE CEMENT SHALL BE PROPERLY PROTECTED FROM THE WEATHER UNTIL USED AND SHALL BE DRY AND FREE FROM LUMPS WHEN PLACED IN THE MIXER.

B. SAND: THE SAND SHALL CONSIST OF HARD SILICEOUS MATERIAL, FREE FROM VEGETABLE MATTER, ORGANIC MATTER, OR SURFACE COATING, THAT IS INJURIOUS TO CONCRETE. THE GRAINS SHALL BE GRADED IN SIZE FROM ONE-FOURTH INCH DOWN, WITH NOT MORE THAN TWENTY-FIVE PER CENT BY WEIGHT WHEN DRY AND ROADED, PASSING A 50 MESH PER LINEAL INCH SIEVE AND NOT MORE THAN FIVE PER CENT PASSING A 100 MESH PER LINEAL INCH SIEVE. THREE PER CENT BY WEIGHT OF CLAY OR LOAM, OR A COMBINATION OF THE TWO, WILL BE PERMITTED PROVIDED THEY ARE WELL PULVERIZED AND DISTRIBUTED THROUGHOUT THE MIX. THE FINENESS MODULUS SHALL NOT BE LESS THAN 2.5 AND NOT MORE THAN 3.0.

C. MANHOLE GRAVEL: THE GRAVEL SHALL CONSIST OF CLEAN, HARD, TOUGH STONES FREE FROM VEGETABLE MATTER, ORGANIC MATTER, OR SURFACE COATING, RANGING IN SIZE FROM ONE & ONE HALF INCH DOWN. NOT MORE THAN FIVE PER CENT BY WEIGHT WHEN DRY AND ROADED, PASSING A SCREEN HAVING FOUR MESHES PER LINEAL INCH AND NO INTERMEDIATE SIZES SHALL BE REMOVED.

D. CONDUIT GRAVEL: THE GRAVEL SHALL CONSIST OF CLEAN, TOUGH STONES, FREE FROM VEGETABLE MATTER, ORGANIC MATTER, OR SURFACE COATING, RANGING IN SIZE FROM ONE-HALF INCH DOWN, NOT MORE THAN FIVE PER CENT BY WEIGHT WHEN DRY AND ROADED, PASSING A SCREEN HAVING FOUR MESHES PER LINEAL INCH AND NO INTERMEDIATE SIZES SHALL BE REMOVED.

E. WATER: THE WATER USED FOR MIXING OR SPRINKLING CONCRETE SHALL BE CLEAR AND FREE FROM EARTH, SILT, ALKALI, SALT, OR OTHER DETRIMENTAL IMPURITIES. WHEN POSSIBLE CITY WATER WILL BE USED.

F. STEEL: METAL REINFORCEMENT BEFORE BEING PLACED SHALL BE FREE FROM LOOSE RUST SCALE, GREASE, CLAY OR OTHER COATINGS THAT WILL DESTROY OR REDUCE THE BOND. THE STEEL SHALL CONFORM TO THE LATEST EDITION OF "SPECIFICATION FOR DEFORMED BILLET-STEEL BARS FOR CONCRETE-REINFORCEMENT" (ASTM A-615.)

III. FIELD TEST FOR MATERIALS

FIELD TESTS SHALL BE MADE AS OFTEN AS IS NECESSARY TO INSURE THE MATERIALS CONFORMING TO THE FOREGOING SPECIFICATIONS. THE METHOD OF MAKING THESE TESTS SHALL BE IN ACCORDANCE WITH THE RECOMMENDATIONS OF THE AMERICAN SOCIETY FOR TESTING MATERIALS FOR CONCRETE AND CONCRETE AGGREGATES.

IV CLASSES OF CONCRETE AND MIX DESIGN

A. TABLE I

CLASS OF CONCRETE:	A 2000 psi	B 3000 psi	C 3000 psi
WATER CONTENT (INCLUDING FREE SURFACE MOISTURE)			
RATIO OF WATER TO CEMENT BY WEIGHT	.68	.58	.58
GALLONS PER SACK	7.8	6.5	6.5
MINIMUM CEMENT CONTENT			
POUNDS PER CUBIC YARD	375	520	520
SACKS PER CUBIC YARD	6	5.5	5.5
TYPE CEMENT	I	I	III (HIGH EARLY)
ALLOWABLE SLUMP	5"-6"	4"-5"	5"-6"
MINIMUM FINE AGGREGATE CONTENT	60%	39%	37%
MAXIMUM AGGREGATE SIZE	1/2"	1 1/2"	1 1/2"

NOTES:
1. FOR DUCT LINE INSTALLATION USE CLASS A (2000psi) CONCRETE, OR AS SPECIFIED ON PLANS.
2. FOR MANHOLE AND VAULT INSTALLATIONS USE CLASS B (3000psi) CONCRETE.
3. FOR STREET BASE REPAIR USE CLASS C (3000psi) CONCRETE.

B. READY-MIX CONCRETE SHALL BE MIXED AND DELIVERED IN ACCORDANCE WITH THE REQUIREMENTS SET FORTH IN THE LATEST EDITION OF "SPECIFICATIONS FOR READY-MIX CONCRETE" ASTM C-94.

C. CONCRETE MADE BY VOLUMETRIC BATCHING AND CONTINUOUS MIXING SHALL CONFORM TO THE REQUIREMENTS SET FORTH IN THE LATEST EDITION OF "SPECIFICATIONS FOR CONCRETE MADE BY VOLUMETRIC BATCHING AND CONTINUOUS MIXING" ASTM C-685.

D. ALL CONCRETE SHALL BE PLACED WITHIN ONE HOUR AFTER MIXING.

V DESIGN AND MIXING OF MORTAR AND CONCRETE HAND MIXES

A. MORTAR DESIGN
MORTAR SHALL BE COMPOSED OF ONE PART TYPE I PORTLAND CEMENT TO 2 3/4 PARTS GRADED STANDARD SAND BY VOLUME. THE SAND SHOULD NOT BE EXCESSIVELY WET OR ENTIRELY DRY WHEN MEASURED.

B. CONCRETE HAND MIX DESIGN FOR SMALL JOBS
THE FOLLOWING NUMBERS REFER TO THE VOLUMES, RESPECTIVELY, OF CEMENT, SAND, AND AGGREGATE TO BE USED FOR EACH MIX.
1. (1:2:2 1/4) FOR USE WITH MAXIMUM AGGREGATE SIZE OF 1/2.
2. (1:2 1/2:3) FOR USE WITH MAXIMUM AGGREGATE SIZE OF 1 1/2.

C. MIXING OF CONCRETE
THE CEMENT AND NATURAL MIXED AGGREGATE SHALL BE MEASURED IN SUITABLE CONTAINERS. THE MIXTURES SHALL BE PROPORTIONED BY VOLUME, EACH ITEM BEING MEASURED, LOOSE AND SEPARATELY. IF MACHINE MIXED IN A ROTARY TYPE BATCH MIXER, THE SPEED OF THE OUTSIDE EDGE OF THE DRUM SHALL BE ABOUT 120 FEET PER MINUTE. DRY MIX THE CEMENT AND AGGREGATES UNTIL OF UNIFORM MIXTURE. WATER SHALL THEN BE ADDED UNTIL A WORKABLE MIXTURE IS PRODUCED. EACH BATCH OF CONCRETE SHOULD BE USED IMMEDIATELY AFTER MIXING.

D. MIXING OF MORTAR
THE CEMENT AND SAND SHALL BE MIXED DRY UNTIL OF UNIFORM COLOR. WATER SHOULD THEN BE ADDED AND THE MIXTURE TURNED UNTIL IT FORMS A UNIFORM AND WORKABLE PASTE. EACH BATCH OF MORTAR SHOULD BE USED IMMEDIATELY AFTER MIXING.

VI PLACING OF CONCRETE

A. DUCT LINES: THE CONCRETE FOR CONDUIT LINES SHALL BE PLACED MONOLITHICALLY IMMEDIATELY AFTER MIXING. THE CONCRETE WILL BE SO TAMPED OR PUDDLED SO AS TO MAKE A DENSE CONCRETE ENVELOPE AROUND THE DUCTS. IF NECESSARY TO JOIN A NEW CONDUIT LINE INTO ONE IN WHICH THE CONCRETE HAS SET, THE OLD SURFACE SHALL BE CLEANED, ROUGHENED AND WETTED.

B. MANHOLES AND TRANSFORMER VAULTS: THE CONCRETE FOR MANHOLES AND VAULTS SHALL BE PLACED IMMEDIATELY AFTER MIXING. THE CONCRETE SHALL BE PLACED SO AS TO KEEP THE SURFACE OF THE CONCRETE LEVEL TO PREVENT ANY FLOWING OF THE CONCRETE IN THE FORMS. THE CONCRETE SHALL BE CONTINUOUSLY SPADED TO EXPEL AIR POCKETS. THE TOP OF THE WALLS SHALL BE WELL CLEANED, ROUGHENED AND WETTED IMMEDIATELY BEFORE POURING THE ROOF SLAB.

C STREET PAVEMENT: SEE DETAIL #20

VII PROTECTION OF FRESH CONCRETE

CONCRETE SHALL BE KEPT MOIST BY SPRINKLING WITH WATER FOR A PERIOD SUITABLE TO THE CHARACTER OF THE STRUCTURE. WALKING OR WORKING OVER FINISHED SURFACES SHALL NOT BE PERMITTED UNTIL SAME HAVE SUFFICIENTLY SET. FINISHED STREET SURFACES SHALL BE WELL BARRICADED FOR AT LEAST FORTY-EIGHT HOURS AFTER PLACEMENT. FORMS AND BRACINGS FOR WALLS OF MANHOLES AND TRANSFORMER VAULTS SHALL NOT BE DISTURBED DURING THE FIRST THIRTY-SIX HOURS AFTER CONCRETE HAS BEEN PLACED. FORMS AND BRACINGS FOR ROOFS OF MANHOLES AND TRANSFORMER VAULTS SHALL NOT BE REMOVED FOR AT LEAST SEVEN DAYS AFTER CONCRETE HAS BEEN PLACED.

VIII FINISH

UNLESS ESPECIALLY CALLED FOR, NO WORK IS TO BE DONE BY WAY OF FINISHING CONCRETE TO SURFACES AFTER THE FORMS ARE REMOVED, EXCEPT THAT SERIOUS FAULTS IN THE CONCRETE SURFACE SHALL BE CHISELED OUT AND POCKET FORMED AND FILLED WITH CEMENT MORTAR IN SUCH A MANNER THAT THE PATCH IS SECURELY KEYED INTO THE CONCRETE SURFACE.

1/05/04 ISSUED FOR CONSTRUCTION

[redacted]

CD

TU ELECTRIC

REVISION DESCRIPTION	DATE	NO.	W.A.	APP.	DRAWN	CH.	APP.	APP.

ESTIMATE | W.A. | UNIT ID | DWG TYPE | LIST OF DRAWINGS

SCALE (H=NO SCALE) (V=NO SCALE)

NETWORK UNDERGROUND APPURTENANCE SHEETS MISCELLANEOUS DETAILS

DATE	DWN.	CH.	ENG.	APP.	APP.
05-12-92	MED	JRC	JRC	JES	PRN

E-NUA-1

SHEET NO. [redacted]

E-NUA-1
SHEET NO. 8

00-0360 46

DETAIL # 12

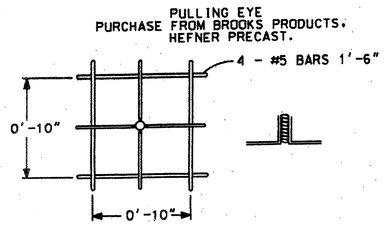

PULLING EYE DETAIL

DETAIL # 14

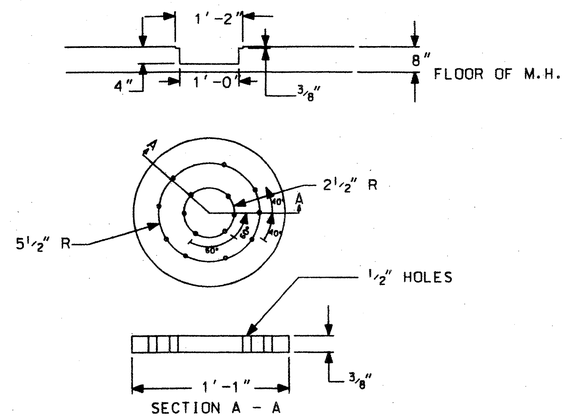

SUMP DETAIL

DETAIL # 15

~~26 1/2"~~ 36" MH COVER AND FRAME

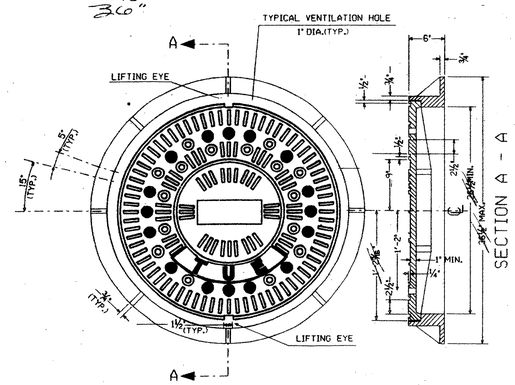

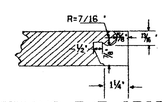

LIFTING EYE SECTION DETAIL

GENERAL NOTES

BEARING SURFACE BETWEEN COVER AND FRAME SHALL BE MACHINED.

COVER AND FRAME SHALL BE CONSTRUCTED TO H-20 TRAFFIC LOADING.

COVER AND FRAME SHALL BE CONSTRUCTED OF GRAY CAST IRON.

MANHOLE COVER AND FRAME SHALL NOT EXCEED 700 lbs.

DETAIL # 13

~~26 1/2"~~ 36" NECK DETAIL (PRECAST)

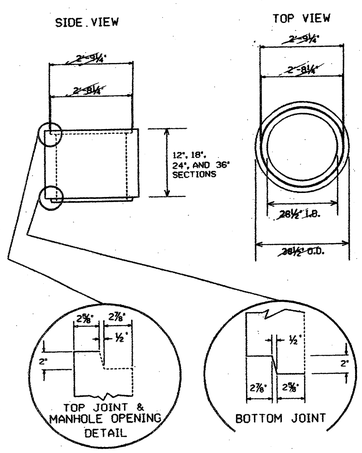

DETAIL # 16

— FABRICATION & INSTALLATION DETAILS —
FOR SIDEWALK MANHOLE COVER

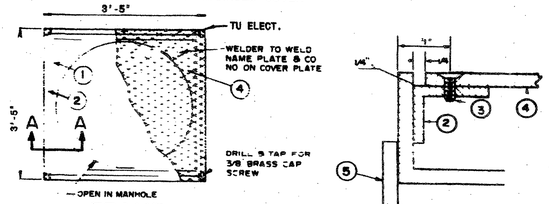

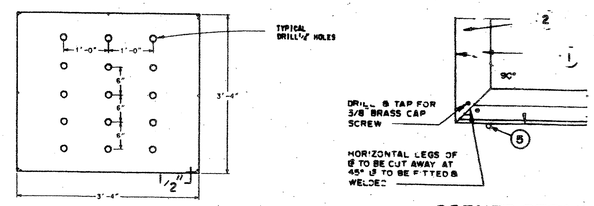

COVER PLATE

CORNER DETAIL OF ANGLE FRAME

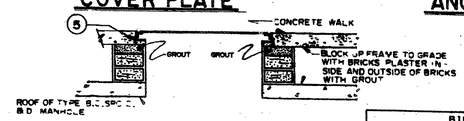

TYPICAL INSTALLATION

BILL OF MATERIAL			
ITEM	QUAN	DESCRIPTION	STK. NO.
1	4	2 1/2" X 2 1/2" X 1/4" X 3'-5" LONG	
2	4	1 1/2" X 1 1/2" X 3/16" X 3'-4" LONG	
3	2	5/8" X 1 1/2" X BRASS CAP SCREWS FLAT HEADS	
4	1	3'-4" X 3'-4" X 3/16" NO SKID STEEL PLATE	
5	4	#5 BAR - 2 1/2"	

DETAIL # 17

TYPICAL MANHOLE SHOWING GROUNDING DETAILS

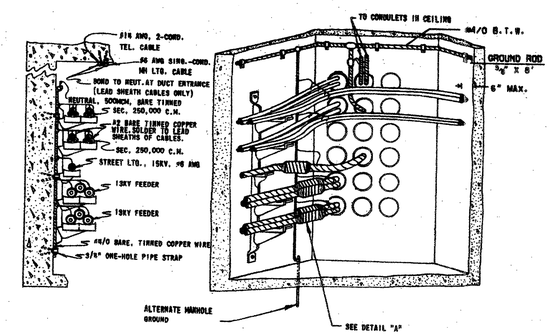

GROUND RODS FURNISHED BY TU ELECTRIC AND INSTALLED BY CONTRACTOR

DETAIL "A"

1/05/04 ISSUED FOR CONSTRUCTION

[redacted]

~~E10~~

CD

TU ELECTRIC

REVISION DESCRIPTION	DRAWN.	CH.	APP.	APP.

UNIT ID

DWG TYPE

ESTIMATE

NO.	DATE

W.A.

LIST OF DRAWINGS

SCALE (H=NO SCALE) (V=NO SCALE)

NETWORK UNDERGROUND APPURTENANCE SHEETS MISCELLANEOUS DETAILS

DATE	DWN.	CH.	ENG.	APP.	APP.
05-12-92	MED	JRC	JRC	JES	PRN

E-NUA-1
SHEET NO. [redacted]

E-NUA-1
SHEET NO. 6

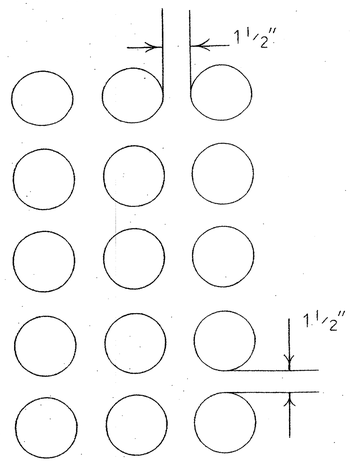

15 - 5" OR 6"
TERMINATOR INSTALLATION
IN MANHOLES

SEE JOB SKETCH FOR
NUMBER OF TERMINATORS
TO BE INSTALLED

DETAIL #8

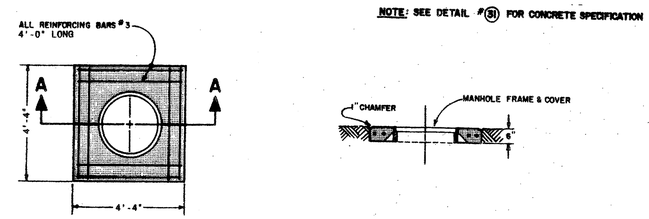

PLAN

SECTION A-A

— CONCRETE SLAB FOR MANHOLE —
CASTING

DETAIL #11

DETAIL #24

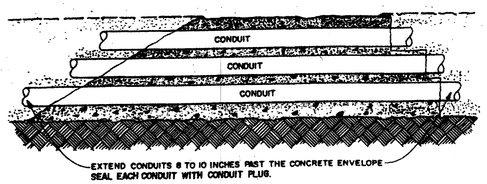

— SLOPED AND STAIR STEPPED —
COLD JOINTS

DETAIL #28

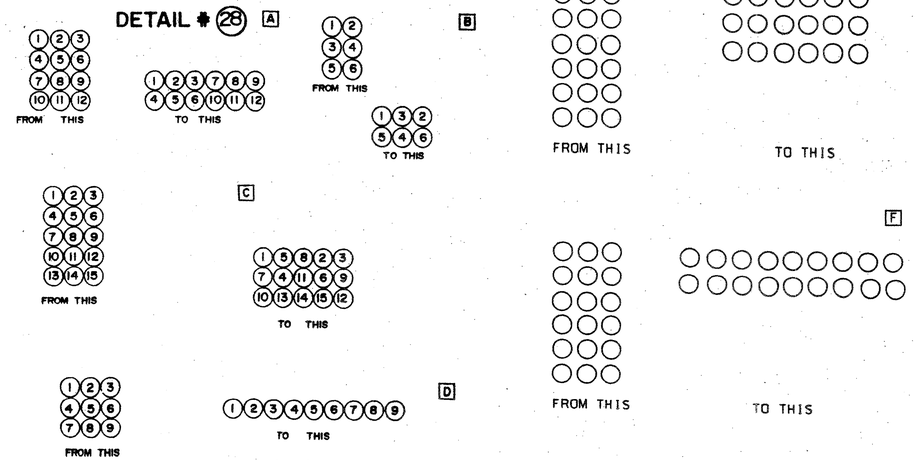

CONDUIT TRANSITION DETAILS

1/05/04 ISSUED FOR CONSTRUCTION

[redacted]

CD

TU ELECTRIC

				DRAWN	APP.
				CH.	APP.

UNIT ID

DWG TYPE

REVISION DESCRIPTION

ESTIMATE

DATE

W.A.

NO.

W.A.

LIST OF DRAWINGS

APP. PRN

APP. JES

ENG. JRC

CH. JRC

DWN. MED

SCALE (H AND SCALE) (V AND SCALE)

DATE 05-12-92

NETWORK UNDERGROUND
APPURTENANCE SHEETS
MISCELLANEOUS DETAILS

E-NUA-1

SHEET NO. [redacted]

DETAIL #7

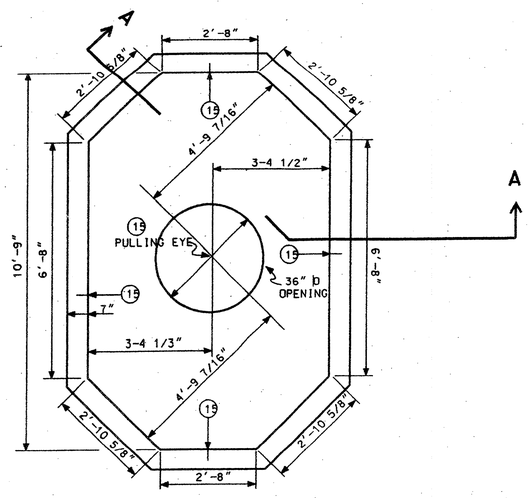

PLAN VIEW

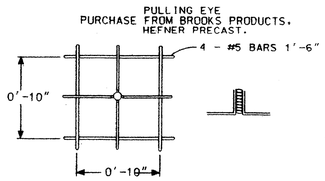

PULLING EYE DETAIL
5 REQUIRED

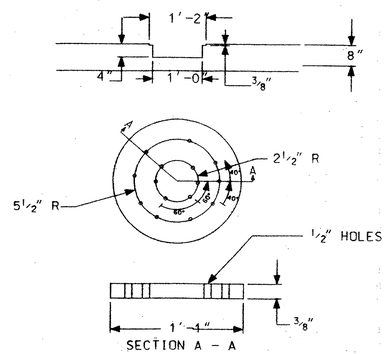

SUMP DETAIL

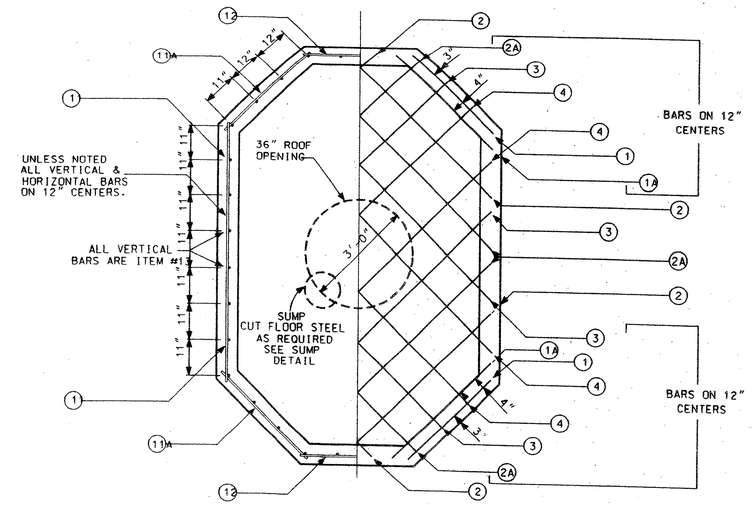

WALL STEEL

FLOOR STEEL

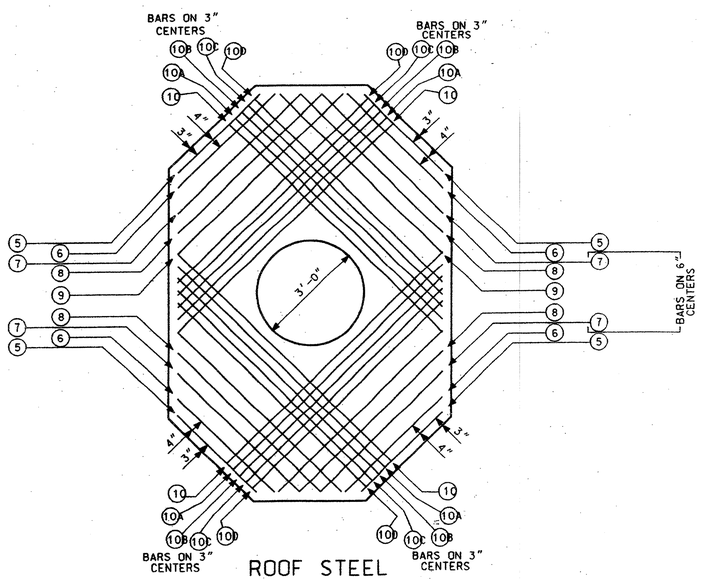

ROOF STEEL

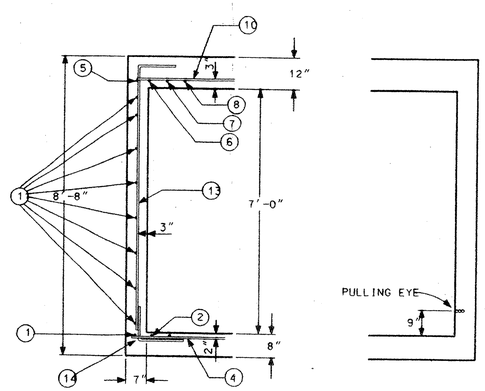

SECTION A - A

MATERIALS FOR POURED IN PLACE MANHOLE

MARK	LENGTHS FT.	LENGTHS IN.	QUANTITY FLOOR	QUANTITY WALLS	QUANTITY ROOF	TOTAL	SHAPE	SIZE
1	3	3	4			13'-0"	ST.	#5
1A	3	10	4			15'-4"	ST.	#5
2	5	10	4			23'-4"	ST.	#5
2A	7	7	4			30'-4"	ST.	#5
3	8	7	4			34'-4"	ST.	#5
4	9	7	4			38'-4"	ST.	#5
5	3	2			4	12'-8"	ST.	#5
6	3	10			4	15'-4"	ST.	#5
7	4	10			4	19'-4"	ST.	#5
8	5	8			4	22'-8"	ST.	#5
9	6	6			4	26'-0"	ST.	#5
10	8	6			4	34'-0"	ST.	#5
10A	8	3			4	33'-0"	ST.	#5
10B	8	0			4	32'-0"	ST.	#5
10C	7	9			4	31'-0"	ST.	#5
10D	7	6			4	30'-0"	ST.	#5
11	7	4		16		117'-4"	ST.	#5
11A	3	5		32		109'-4"	ST.	#5
12	3	2		16		50'-8"	ST.	#5
13	8	9		36		315'-0"	ST.	#5
14	3	4	36		4	120'-0"	7'-9 1/2" 2' 1'-4"	#5
15			1	4		5'-0"	PULLING EYE	1"Ø x 6" BOLT
CONCRETE			1.94 CU.YDS	5.35 CU.YDS	3.85 CU.YDS	11.14 CU.YDS	3000 PSI	

MANHOLE COVER & FRAME TU STD 310-050 — 1 EA. — 3'-0" OPENING
VENDOR: WESTERN IRON WORKS, 21 EAST SIXTH ST. SAN ANGELO TX. 76903
OR: HEFNER PRECAST, DIVISION OF BROOKS PRODUCTS, 2229 NORTH MAIN, CLEBURNE TX. 76031

STEEL TO CONFORM TO THE LATEST STANDARD SPECIFICATION FOR DEFORMED BILLET-STEEL BARS FOR CONCRETE REINFORCEMENT.

SEE DETAIL #9 FOR CONCRETE SPECIFICATION

GENERAL NOTES SIMILAR TO TYPE "B" MANHOLE, SHEET #1. [redacted]

"TYPE - 2-WAY"
10'-9" X 6'-9" X 7'-0"

1/05/04 ISSUED FOR CONSTRUCTION [redacted]

CD

TU ELECTRIC

DATE	NO.	REVISION DESCRIPTION	DRAWN	CH.	APP.	APP.

DWG TYPE | UNIT ID | ESTIMATE | W.A. | LIST OF DRAWINGS

NETWORK UNDERGROUND
APPURTENANCE SHEETS
MANHOLE DETAILS

SCALE (H=) (V=1/2"=1'-) | DWN. MED | CH. JRC | ENG. JRC | APP. JES | APP. PRN | W.A. | DATE 05-12-92

E NUA-1
SHEET NO. [redacted]

E NUA-1
SHEET NO. 4

DETAIL #6

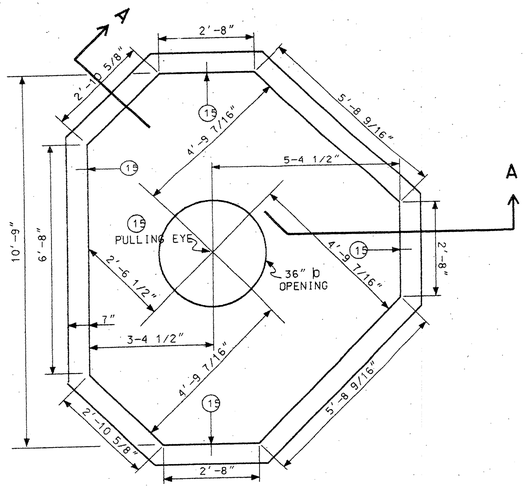

PLAN VIEW

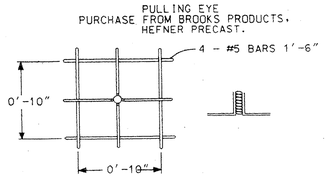

PULLING EYE DETAIL
5 REQUIRED

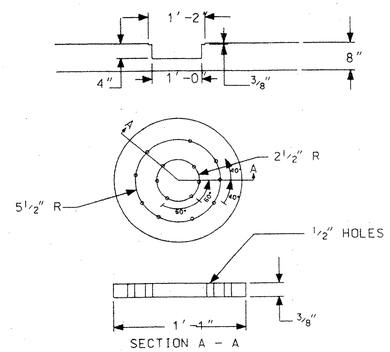

SUMP DETAIL

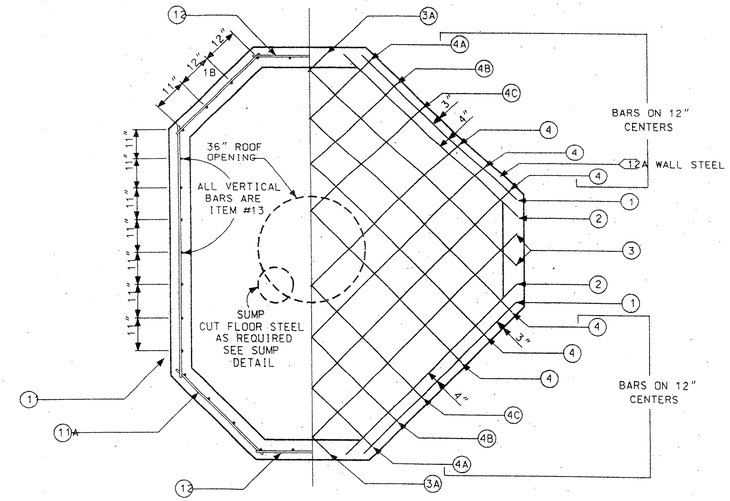

WALL STEEL

FLOOR STEEL

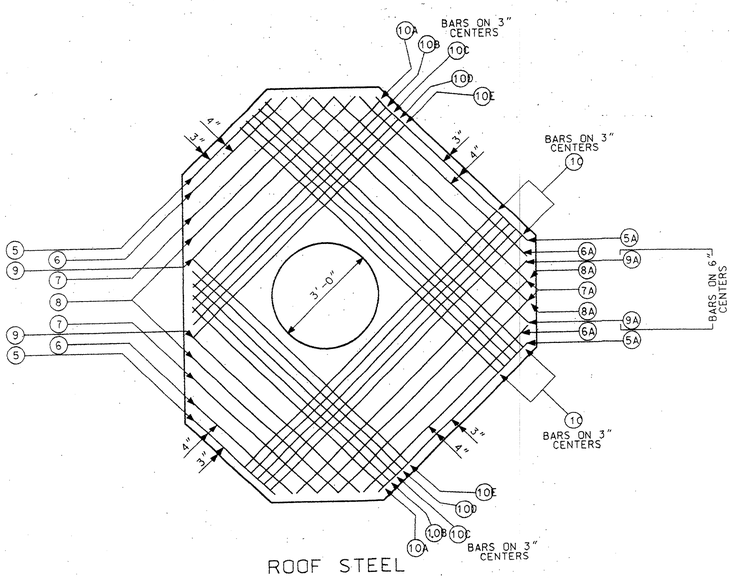

ROOF STEEL

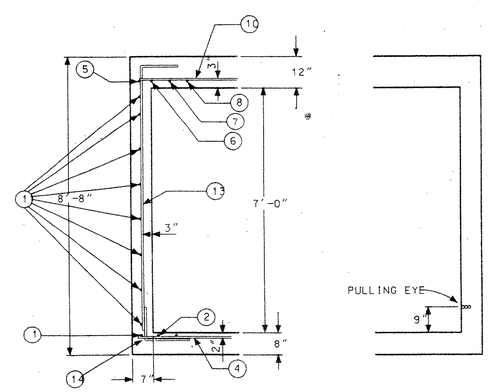

SECTION A - A

"TYPE - 3-WAY"
10'-9" X 8'-9" X 7'-0"

MATERIALS FOR POURED IN PLACE MANHOLE

MARK	LENGTHS FT.	LENGTHS IN.	QUANTITY FLOOR	QUANTITY WALLS	QUANTITY ROOF	QUANTITY TOTAL	SHAPE	SIZE
1	6	1	2			12'-2"	ST.	#5
1A	3	1	2			6'-2"	ST.	#5
1B	3	6	2			7'-0"	ST.	#5
1C	7	3	1			7'-3"	ST.	#5
2	6	10	2			13'-8"	ST.	#5
2A	3	1	2			6'-2"	ST.	#5
2B	3	3	2			6'-6"	ST.	#5
2C	7	5	1			7'-5"	ST.	#5
3	8	10	2			17'-8"	ST.	#5
3A	5	11	2			11'-10"	ST.	#5
4	10	3	6			61'-6"	ST.	#5
4A	7	7	2			15-2'	ST.	#5
4B	8	8	2			17'-4"	ST.	#5
4C	9	7	2			19'-2"	ST.	#5
5	3	1			2	6'-2"	ST.	#5
5A	6	0			2	12'-0"	ST.	#5
6	3	10			2	7'-8"	ST.	#5
6A	6	7			2	13'-2"	ST.	#5
7	4	10			2	9'-8"	ST.	#5
7A	7	8			2	15'-4"	ST.	#5
8	5	8			2	11'-4"	ST.	#5
8A	8	6			2	17'-0"	ST.	#5
9	6	6			2	13'-0"	ST.	#5
9A	9	5			2	18'-10"	ST.	#5
10	10	3			10	102'-6"	ST.	#5
10A	7	6			2	15'-0"	ST.	#5
10B	7	9			2	15'-6"	ST.	#5
10C	8	0			2	16'-0"	ST.	#5
10D	8	3			2	16'-6"	ST.	#5
10E	8	6			2	17'-0"	ST.	#5
11	7	4		8		58'-8"	ST.	#5
11A	3	6		16		56'-0"	ST.	#5
12	3	2		24		76'-0"	ST.	#5
12A	6	1		16		97'-4"	ST.	#5
13	8	9		36		315'-0"	ST.	#5
14	3	4	36			120'-0"	2' 1'-4"	#5
15			1	4		5'-0"	PULLING EYE	1 1/2" X 6" BOLT
CONCRETE			1.94 CU.YDS	5.35 CU.YDS	3.85 CU.YDS	11.14 CU.YDS	3000 PSI	

MANHOLE COVER & FRAME TU STD 310-050 1 EA. 3'-0" OPENING
VENDOR: WESTERN IRON WORKS, 21 EAST SIXTH ST. SAN ANGELO TX. 76903
OR: HEFNER PRECAST, DIVISION OF BROOKS PRODUCTS, 2229 NORTH MAIN, CLEBURNE TX. 76031

STEEL TO CONFORM TO THE LATEST STANDARD SPECIFICATION FOR DEFORMED BILLET-STEEL BARS FOR CONCRETE REINFORCEMENT. [redacted]

SEE DETAIL #9 FOR CONCRETE SPECIFICATION.

GENERAL NOTES SIMILAR TO TYPE "C" MANHOLE, SHEET #1 [redacted]

1/05/04 ISSUED FOR CONSTRUCTION [redacted]

CD

TU ELECTRIC

REVISION DESCRIPTION	DRAWN	CH.	APP.	APP.

UNIT ID

DWG TYPE

ESTIMATE

W.A.

LIST OF DRAWINGS

SCALE (H=) (V=1/2"=1'-)

NETWORK UNDERGROUND APPURTENANCE SHEETS MANHOLE DETAILS

DATE	DWN.	CH.	ENG.	APP.	APP.	W.A.	NO.	DATE
05-12-92	WED	JRC	JRC	JES	PRN			

E NUA-1

SHEET NO. [redacted]

E NUA-1
SHEET NO. 3

DETAIL #5

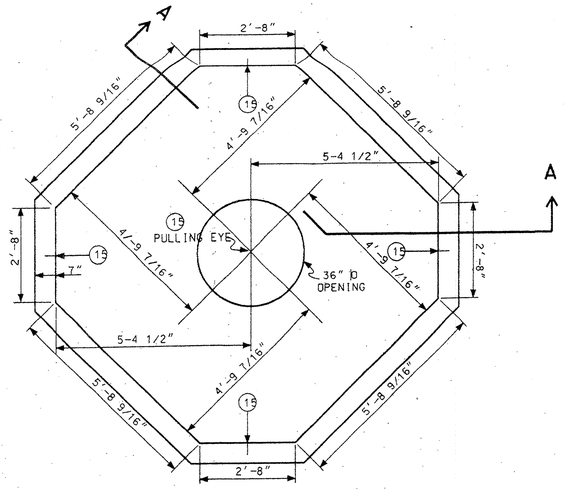

PLAN VIEW

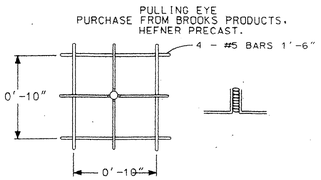

PULLING EYE DETAIL
5 REQUIRED

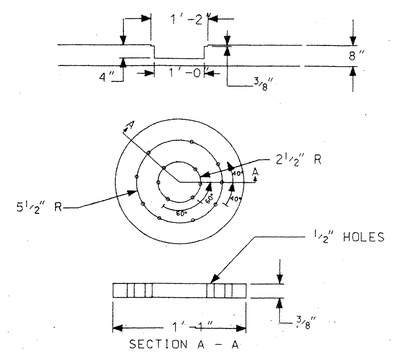

SUMP DETAIL

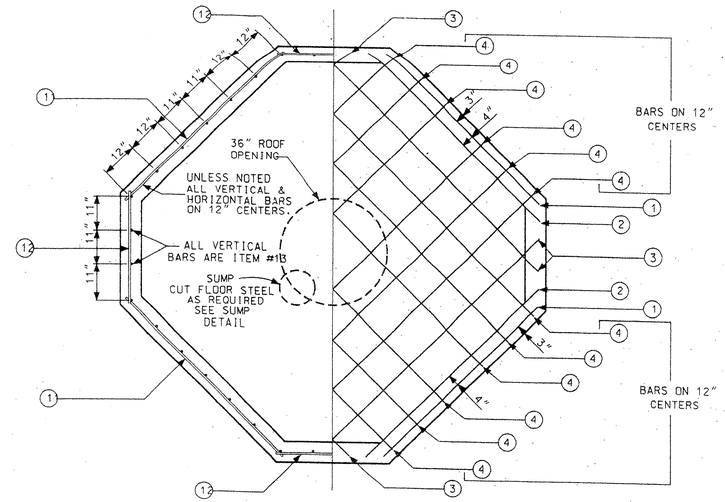

WALL STEEL

FLOOR STEEL

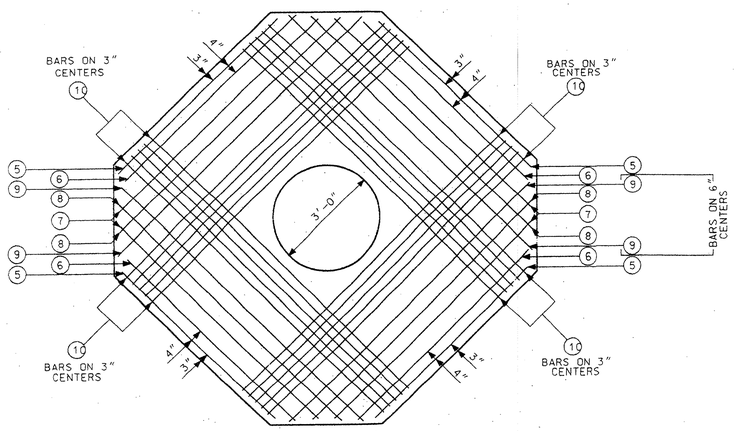

ROOF STEEL

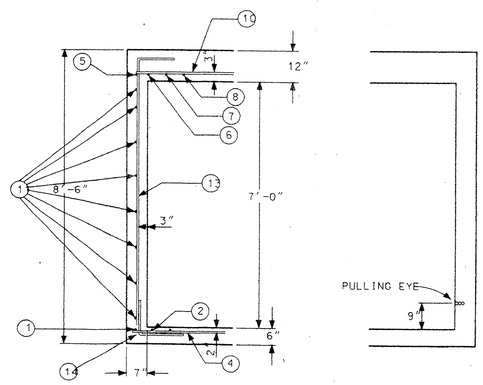

SECTION A - A

"TYPE - 4-WAY"
10'-9" X 10'-9" X 7'-0"

MATERIALS FOR POURED IN PLACE MANHOLE

MARK	LENGTHS FT.	LENGTHS IN.	QUANTITY FLOOR	QUANTITY WALLS	QUANTITY ROOF	QUANTITY TOTAL	SHAPE	SIZE
1	6	1	4			24'-4"	ST.	#5
2	6	10	4			27'-4"	ST.	#5
3	8	10	4			35'-4"	ST.	#5
4	10	3	14			143'-6"	ST.	#5
5	6	1			4	24'-4"	ST.	#5
6	6	10			4	27'-4"	ST.	#5
7	7	10			4	31'-4"	ST.	#5
8	8	10			4	35'-4"	ST.	#5
9	9	10			4	39'-4"	ST.	#5
10	10	3			20	205'-0"	ST.	#5
11	6	3		32		200'-0"	ST.	#5
12	3	2		32		101'-4"	ST.	#5
13	8	9		36		315'-0"	7'-9 3/4"	#5
14	3	4	36			120'-0"	2' 1"-4"	#5
15			1	4		5'-0"	PULLING EYE	1 1/4" X 6" BOLT
CONCRETE			1.94 CU.YDS	5.35 CU.YDS	3.85 CU.YDS	11.14 CU.YDS	3000 PSI	

MANHOLE COVER & FRAME TU STD 310-050 1 EA.
VENDOR: WESTERN IRON WORKS, 21 EAST SIXTH ST. SAN ANGELO TX. 76903
OR: HEFNER PRECAST, DIVISION OF BROOKS PRODUCTS, 2229 NORTH MAIN, CLEBURNE TX. 76031

3'-0" OPENING

STEEL TO CONFORM TO THE LATEST STANDARD SPECIFICATION FOR DEFORMED BILLET-STEEL BARS FOR CONCRETE REINFORCEMENT.

SEE DETAIL #9 FOR CONCRETE SPECIFICATION

GENERAL NOTES SIMILAR TO TYPE "D" MANHOLE. SHEET #2.

[redacted]

1/05/04 ISSUED FOR CONSTRUCTION

[redacted]

CD

TU ELECTRIC

REVISION DESCRIPTION	DATE	NO.	W.A.	APP. PRN	APP. JES	ENG. JRC	CH. JRC	DWN. MLD	DATE 05-12-92

DRAWN CH. APP. APP.

UNIT ID

DWG TYPE

ESTIMATE

W.A.

LIST OF DRAWINGS

SCALE (H=) (V=1/2"=1'-)

NETWORK UNDERGROUND APPURTENANCE SHEETS MANHOLE DETAILS

E NUA-1

SHEET NO. [redacted]

00-0345 51

E-NUA-1
SHEET NO. 2

NOTE: THIS MANHOLE IS DESIGNED FOR INSTALLATIONS WHERE A MANHOLE IS REQUIRED IN AN EXISTING DUCT LINE.

—SPECIAL "C" MANHOLE—

DETAIL #3

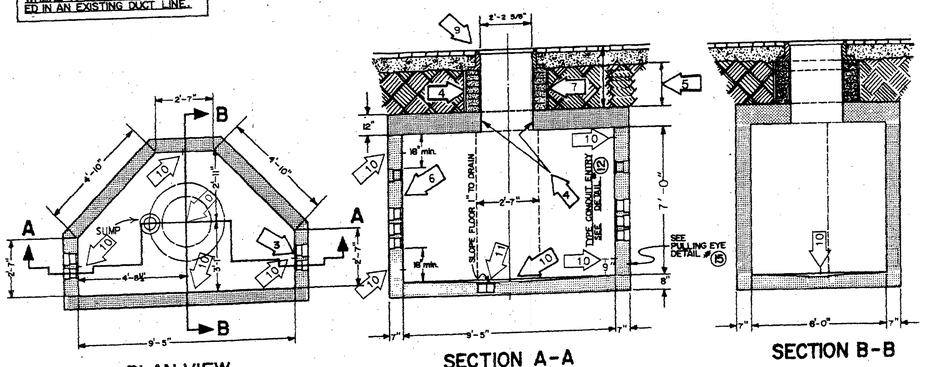

PLAN VIEW — SECTION A-A — SECTION B-B

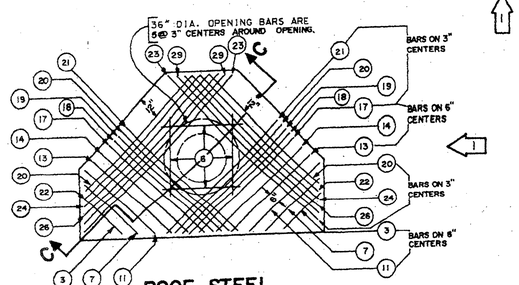

SIDE-A — SIDE-B

ROOF STEEL
BARS ON SIDES A & B ARE SPACED THE SAME

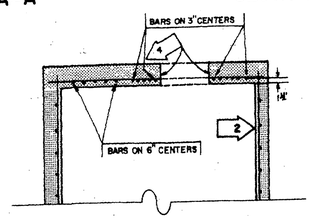

SECTION C-C

REINFORCING BARS						
ITEM	LENGTHS		QUANTITY			
	FT.	IN.	FLOOR	WALLS	ROOF	TOTAL
1	2	0	1			1
3	2	6			2	2
6	3	3		18	4	22
7	3	6			2	2
8	3	9	1			1
10	4	3	2			2
11	4	6			2	2
13	5	0	1		2	3
14	5	3	2		2	4
15	5	6		12		12
17	6	0			2	2
18	6	3	2		2	4
19	6	6			2	2
20	6	9	2		4	6
21	7	0	1		2	3
22	7	10		29	4	33
23	9	3			2	2
24	7	9			2	2
26	8	3			2	2
29	9	0	1		2	3
31	10	3	3	6		9

ALL REINFORCING STEEL, DEFORMED, INTERMEDIATE GRADE, OPEN HEARTH, ASTM. A 615 DESIGNATION.

SEE DETAIL # 19 FOR CONCRETE SPECIFICATIONS

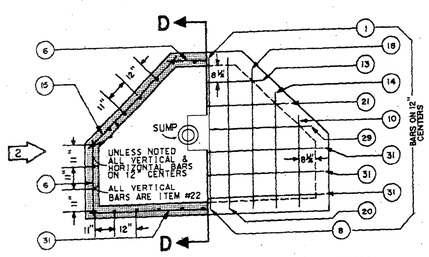

WALL STEEL (TYPICAL) — FLOOR STEEL (TYPICAL)

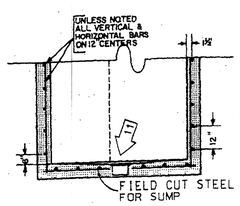

SECTION D-D

—TYPE "D" MANHOLE—

DETAIL #4

NOTE: SEE DETAIL # 21 FOR DEEP PANEL WHEN CALLED FOR ON SKETCH.

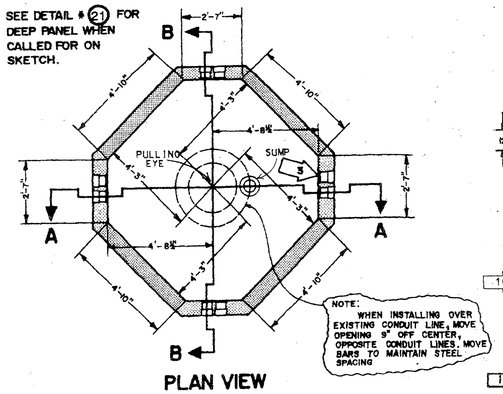

PLAN VIEW

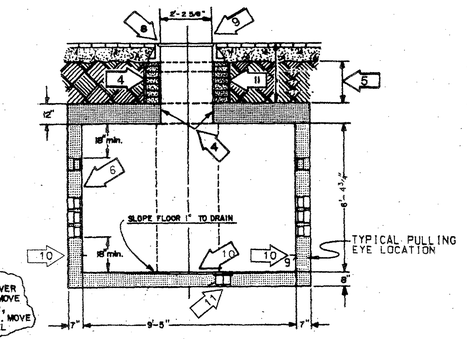

SECTION A-A & B-B

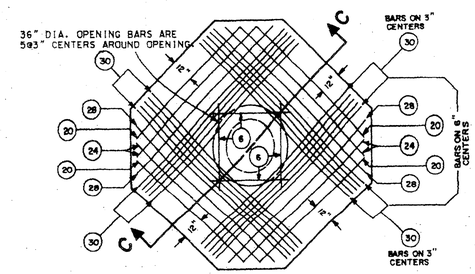

SIDE-A — SIDE-B

ROOF STEEL
BARS ON SIDES A&B ARE SPACED THE SAME

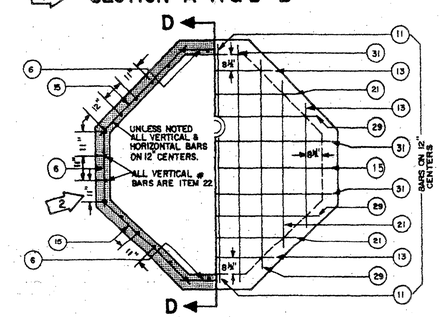

WALL STEEL (TYPICAL) — FLOOR STEEL (TYPICAL)

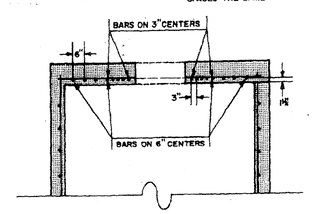

SECTION C-C

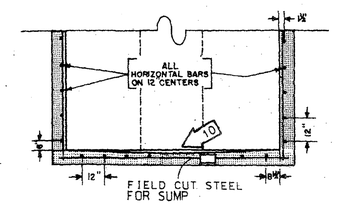

SECTION D-D

REINFORCING BARS						
ITEM	LENGTHS		QUANTITY			
	FT.	IN.	FLOOR	WALLS	ROOF	TOTAL
6	3	3		24	4	28
11	4	6	4			4
13	5	0	4			4
15	5	6		24		24
20	6	9			4	4
21	7	0	4			4
22	7	10		32		32
24	7	9			4	4
28	8	9			4	4
29	9	0	4			4
30	9	3			20	20
31	10	3	5			5

STEEL TO CONFORM TO THE LATEST STANDARD SPECIFICATIONS FOR DEFORMED BILLET-STEEL BARS FOR CONCRETE REINFORCEMENT.

SEE DETAIL # 19 FOR CONCRETE SPECIFICATIONS

— GENERAL NOTES —

ALL GENERAL NOTES APPLY TO BOTH SPECIAL "C" & TYPE "D" MANHOLES

1. STANDARD HEADROOM 7'-0". ALL REINFORCING BARS TO BE #5 DEFORMED BARS. ALL BARS TO HAVE MINIMUM COVER OF 1½". ALL DIMENSIONS ARE TO ℄ OF BARS. SEE PLANS FOR EXTRA HEADROOM.
2. FIELD CUT STEEL AS REQUIRED FOR TERMINATORS.
3. NUMBER OF TERMINATORS SHOWN ON PLANS INSTALLED IN EACH END PANEL. SEE DETAIL # 8
4. BLOCK UP CASTING WITH BRICKS TO PAVEMENT GRADE. BRICKWORK TO RECEIVE ½" MORTAR COATING INSIDE & OUTSIDE.
5. 15½" MINIMUM CUSHION.
6. FOR GROUNDING DETAILS SEE DETAIL # 17
7. A PRECAST REINFORCED CONCRETE NECK MAY BE USED WHEN 28" OR MORE. SEE DETAIL # 13
8. 4'-4" X 4'-4" X 6" CONCRETE SLAB AROUND M.H. CASTING WHEN INSTALLED IN UNPAVED AREA. SEE DETAIL # 10
9. 26½" MH CASTING. SEE DETAIL # 15
10. PULLING EYE. SEE DETAIL # 12
11. SUMP. SEE DETAIL # 14

1/05/04 ISSUED FOR CONSTRUCTION

[redacted]

CD

TU ELECTRIC

REVISION DESCRIPTION	DATE	NO.	APP.	DRAWN	CH.	APP.

UNIT ID | DWG TYPE | ESTIMATE | W.A. | LIST OF DRAWINGS

NETWORK UNDERGROUND APPURTENANCE SHEETS MANHOLE DETAILS

SCALE (H=NO SCALE) (V=NO SCALE) | DATE 05-12-92 | DWN. WED | CH. JRC | ENG. JRC | APP. JES | APP. PDN. | W.A. | NO. | DATE

E-NUA-1
SHEET NO. [redacted]

00-0344 52

E-NUA-1
SHEET NO. 1

—TYPE "B" MANHOLE—

DETAIL #①

NOTE: SEE DETAIL # (21) FOR DEEP PANEL WHEN CALLED FOR ON JOB SKETCH.

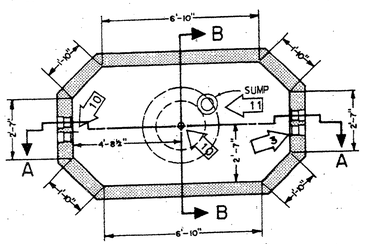

PLAN VIEW

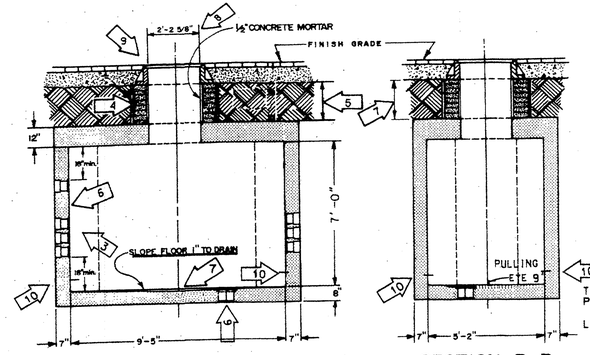

SECTION A-A

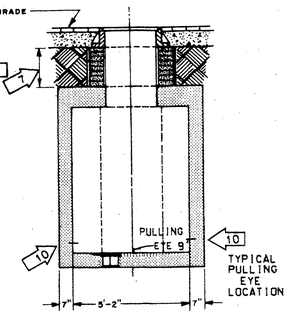

SECTION B-B

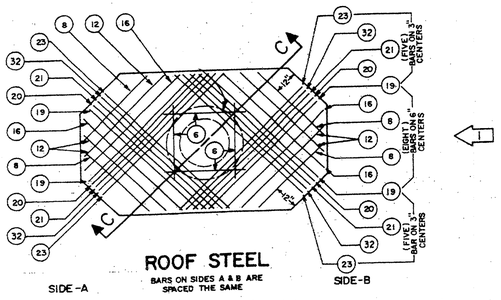

ROOF STEEL

BARS ON SIDES A & B ARE SPACED THE SAME

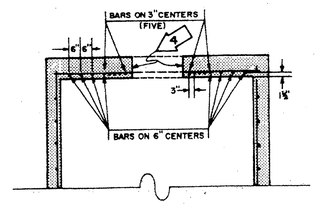

SECTION C-C

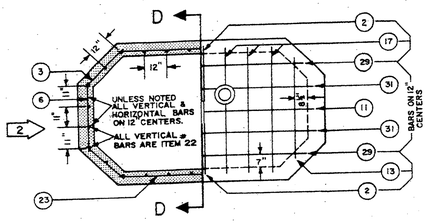

WALL STEEL

(TYPICAL)

FLOOR STEEL

(TYPICAL)

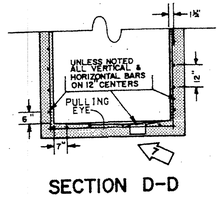

SECTION D-D

REINFORCING BARS						
ITEM	LENGTHS		QUANTITY			
	FT.	IN.	FLOOR	WALLS	ROOF	TOTAL
2	2	3	2			2
3	2	6		24		24
6	3	3		12	4	16
8	3	9			4	4
11	4	6	2			2
12	4	9			4	4
13	5	0	2			2
16	5	9			4	4
17	6	0	6			6
19	6	6			4	4
20	6	9			4	4
21	7	0			4	4
22	7	10		28		
23	7	6		12	4	16
29	9	0	2			2
31	10	3	2			2

STEEL TO CONFORM TO THE LATEST STANDARD SPECIFICATION FOR DEFORMED BILLET-STEEL BARS FOR CONCRETE REINFORCEMENT.

SEE DETAIL # (19) FOR CONCRETE SPECIFICATION

—TYPE "C" MANHOLE—

DETAIL #②

NOTE: SEE DETAIL # (21) FOR DEEP PANEL WHEN CALLED FOR ON JOB SKETCH.

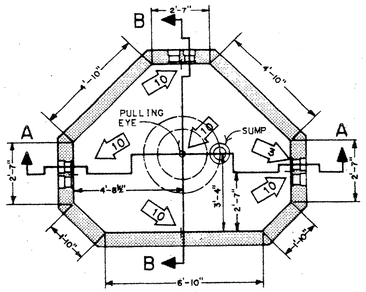

PLAN VIEW

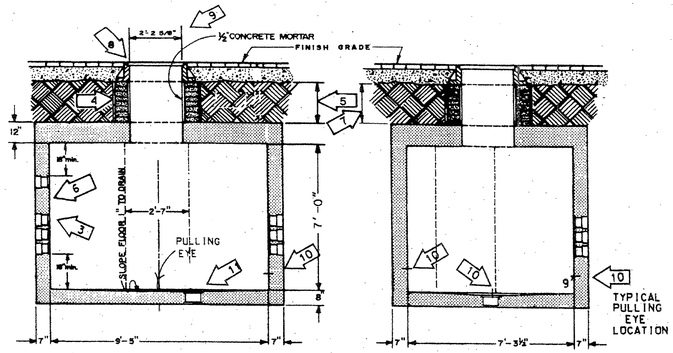

SECTION A-A

SECTION B-B

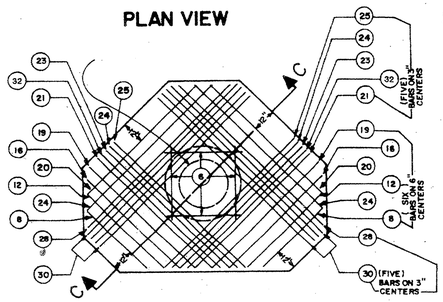

ROOF STEEL

BARS ON SIDES A & B ARE SPACED THE SAME

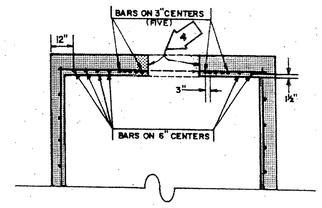

SECTION C-C

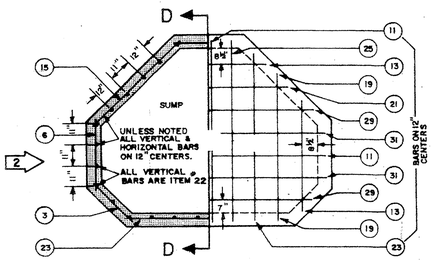

WALL STEEL

(TYPICAL)

FLOOR STEEL

(TYPICAL)

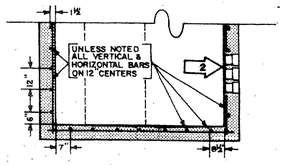

SECTION D-D

REINFORCING BARS						
ITEM	LENGTHS		QUANTITY			
	FT.	IN.	FLOOR	WALLS	ROOF	TOTAL
2	2	3	1			1
3	2	6		12		12
6	3	3		18	4	22
8	3	9			2	2
11	4	6	3			3
12	4	9			2	2
13	5	0	3			3
15	5	6		12		12
16	5	9			2	2
19	6	6	2		2	4
20	6	9			2	2
21	7	0	1		2	3
22	7	10		30		
23	7	6	2	6	2	10
24	7	9			4	4
25	8	0	2		2	4
28	8	9			2	2
29	9	0	2			2
30	9	3			8	8
31	10	3	2			2

STEEL TO CONFORM TO THE LATEST STANDARD SPECIFICATION FOR DEFORMED BILLET-STEEL BARS FOR CONCRETE REINFORCEMENT.

SEE DETAIL (19) FOR CONCRETE SPECIFICATION

— GENERAL NOTES —

ALL GENERAL NOTES APPLY TO BOTH TYPE "B & C" MANHOLES

1. STANDARD HEADROOM - 7'-0". ALL REINFORCING BARS TO BE #5 DEFORMED BARS. ALL BARS TO HAVE MINIMUM COVER OF 1½". ALL DIMENSIONS ARE TO ℄ OF BARS. SEE PLANS FOR EXTRA HEADROOM.
2. FIELD CUT STEEL AS REQUIRED FOR TERMINATORS.
3. NUMBER OF TERMINATORS SHOWN ON PLANS INSTALLED IN EACH END PANEL. SEE DETAIL # (8)
4. BLOCK UP CASTING WITH BRICKS TO PAVEMENT GRADE. BRICKWORK TO RECEIVE ½" MORTAR COATING INSIDE & OUTSIDE.
5. 15½" MINIMUM CUSHION.
6. FOR GROUNDING DETAILS SEE DETAIL # (17)
7. A PRECAST REINFORCED CONCRETE NECK MAY BE USED WHEN 28" OR MORE. SEE DETAIL # (13)
8. 4'-4" X 4'-4" X 6" CONCRETE SLAB AROUND M.H. CASTING WHEN INSTALLED IN UNPAVED AREA. SEE DETAIL # (10)
9. 26½" MH CASTING. SEE DETAIL # (15)
10. PULLING EYE. SEE DETAIL # (12)
11. SUMP. SEE DETAIL # (14)

1/05/04 ISSUED FOR CONSTRUCTION

[redacted]

CD

TU ELECTRIC

					APP.
					APP.
					CH.
					DRAWN
					DATE
					NO.
					REVISION DESCRIPTION

UNIT ID

DWG TYPE

ESTIMATE

W.A.

LIST OF DRAWINGS

NETWORK UNDERGROUND APPURTENANCE SHEETS MANHOLE DETAILS

APP. PRN	APP. JES	ENG. JRC	CH. JRC	DWN. MED	DATE 12-12-91	SCALE NO SCALE

E NUA-1

SHEET NO. [redacted]

53

00-0343

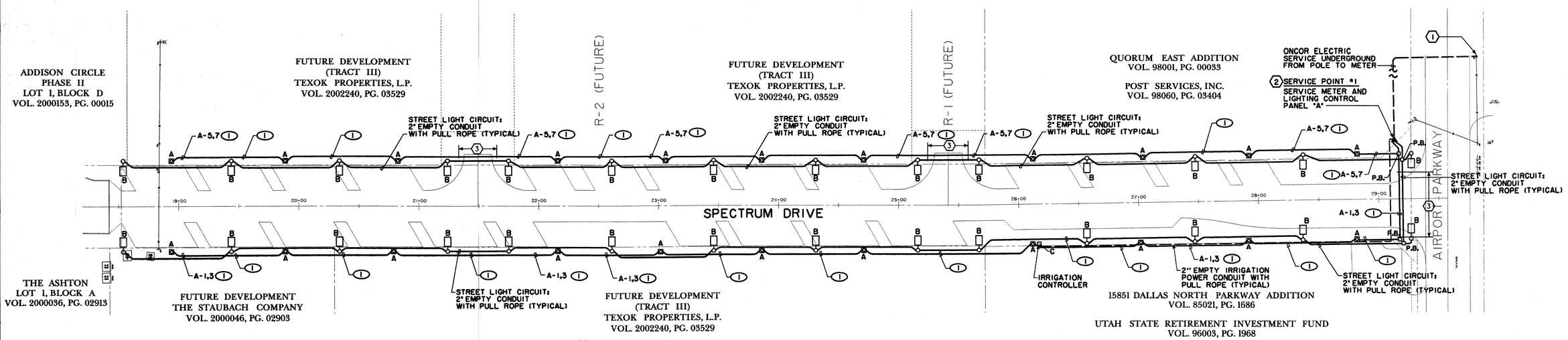

NOTES:

REFER TO LANDSCAPE ARCITECTURAL PLANS FOR EXACT LIGHT POLE LOCATIONS.

REFER TO NOTES AND DETAILS ON SHEET 55

1/54 BASE BID: LIGHTING PLAN

SCALE: 1" = 40'-0"

KEY NOTES

NUMBER	DESCRIPTION
1	ONCOR ELECTRIC SERVICE POLE WITH AERIAL-TO-UNDERGROUND TRANSITION. PROVIDE WIRE AND CONDUIT TERMINATIONS AS REQUIRED BY ONCOR.
2	PROVIDE NEMA 3R ENCLOSURE TO HOUSE PANELS, LIGHT CONTROLS, METERS ETC. SEE DETAIL 3/55.
3	CONCRETE ENCASE CONDUITS UNDER ROADWAY.

LIGHTING CIRCUIT CONDUCTOR SCHEDULE

MARK	WIRE AND CONDUIT
1	(2) #4, #8 GROUND - 2"C
2	(2) #6, #8 GROUND - 2"C
3	(2) #8, #8 GROUND - 2"C

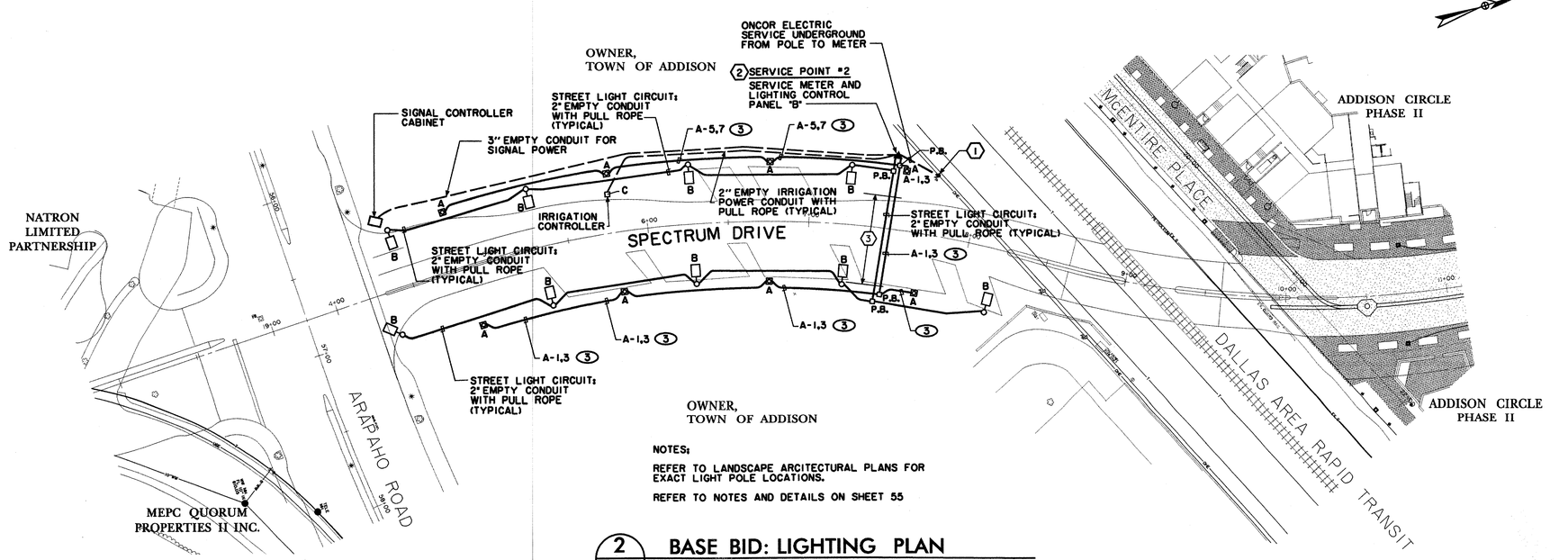

NOTES:

REFER TO LANDSCAPE ARCITECTURAL PLANS FOR EXACT LIGHT POLE LOCATIONS.

REFER TO NOTES AND DETAILS ON SHEET 55

2/54 BASE BID: LIGHTING PLAN

SCALE: 1" = 40'-0"

BENCHMARKS:

'□' CUT SOUTHWEST CORNER OF CURB INLET, WEST SIDE OF SPECTRUM DRIVE, ±30' NORTH OF MORRIS AVENUE.
ELEV. 611.84

'□' CUT ON TOP EAST END OF CURB INLET ON NORTH SIDE OF MORRIS AVENUE AND ±150' EAST OF QUORUM DRIVE CENTERLINE.
ELEV. 616.39

'X' CUT ON CONC. TOP OF CURB OF MEDIAN NOSE ON SPECTRUM DRIVE AT INTERSECTION OF McENTIRE PLACE.
ELEV. 619.30

STATE OF TEXAS
RICHARD L. DICKERSON
69306
REGISTERED PROFESSIONAL ENGINEER
4/26/04

DATE	DESCRIPTION	REF NO.
4/22/04	DELETED 29 PEDESTRIAN POLES/LIGHTS	2
3/02/04	REVISED ALL STREET AND PEDESTRIAN LTG	1
11/07/03	ISSUED FOR BID	

BASE BID
STREET LIGHT CONDUIT & POWER PLAN
SPECTRUM DRIVE EXTENSION

TOWN OF ADDISON, TEXAS

Huitt - Zollars, Inc.
3131 Mckinney Ave., Suite 600, Dallas, TX 75204
Phone (214) 871-3311/Fax (214) 871-0757

DESIGN	DRAWN	APPR.	SCALE	DATE	PROJECT NO.	NO.
HZI	HZI	RLD	1"=40'	NOV 2003	01-3220-01	54

\\hzdallas2\...\dgn\32200ln06.dgn

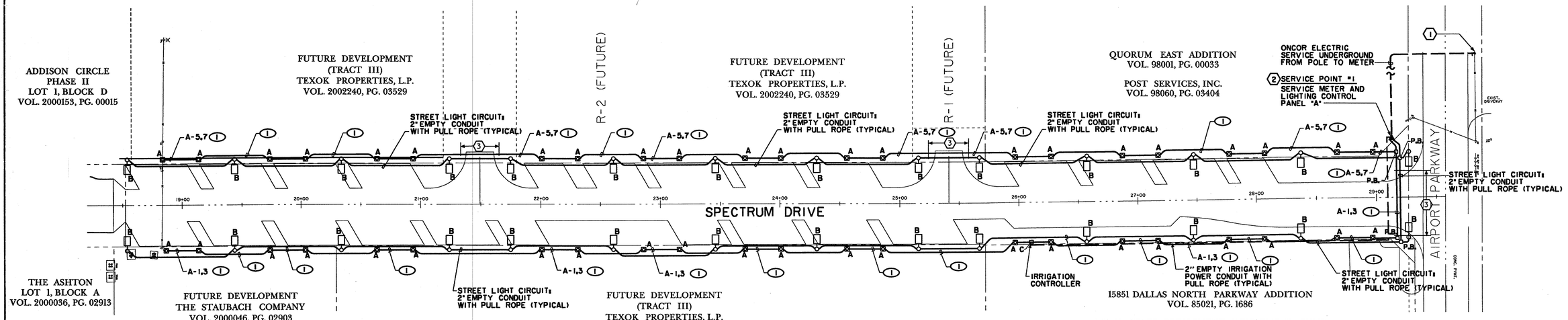

NOTES:

REFER TO LANDSCAPE ARCITECTURAL PLANS FOR EXACT LIGHT POLE LOCATIONS.

REFER TO NOTES AND DETAILS ON SHEET 55

1/54 BASE BID: LIGHTING PLAN

SCALE: 1"=40'-0"

KEY NOTES

NUMBER	DESCRIPTION
1	ONCOR ELECTRIC SERVICE POLE WITH AERIAL-TO-UNDERGROUND TRANSITION. PROVIDE WIRE AND CONDUIT TERMINATIONS AS REQUIRED BY ONCOR.
2	PROVIDE METER BANK IN NEMA 3R ENCLOSURE. MOUNT ON STEEL CHANNEL FRAME. CONSTRUCT FRAME TO SUPPORT METERS, CONTACTOR PANEL, DISCONNECT SWITCHES, PANELBOARD, TIME SWITCH AND PHOTOCELL. REFER TO DETAILS ON SHEET 55.
3	CONCRETE ENCASE CONDUITS UNDER ROADWAY.

LIGHTING CIRCUIT CONDUCTOR SCHEDULE

MARK	WIRE AND CONDUIT
1	(2) #4, #8 GROUND - 2"C
2	(2) #6, #8 GROUND - 2"C
3	(2) #8, #8 GROUND - 2"C

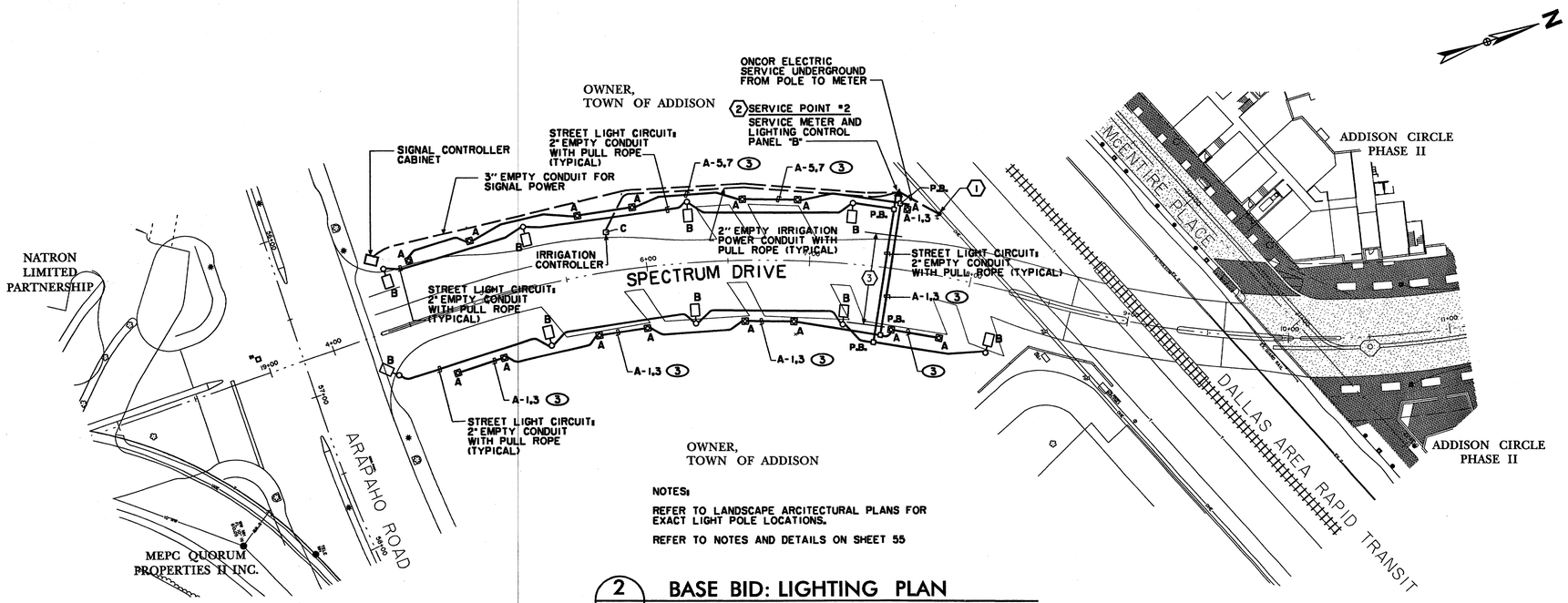

NOTES:

REFER TO LANDSCAPE ARCITECTURAL PLANS FOR EXACT LIGHT POLE LOCATIONS.

REFER TO NOTES AND DETAILS ON SHEET 55

2/54 BASE BID: LIGHTING PLAN

SCALE: 1"=40'-0"

BENCHMARKS:

"□" CUT SOUTHWEST CORNER OF CURB INLET, WEST SIDE OF SPECTRUM DRIVE, ±30' NORTH OF MORRIS AVENUE.
ELEV. 611.84

"□" CUT ON TOP EAST END OF CURB INLET ON NORTH SIDE OF MORRIS AVENUE AND ±150' EAST OF QUORUM DRIVE CENTERLINE.
ELEV. 616.39

"X" CUT ON CONC. TOP OF CURB OF MEDIAN NOSE ON SPECTRUM DRIVE AT INTERSECTION OF McENTIRE PLACE.
ELEV. 619.30

STATE OF TEXAS
RICHARD L. DICKERSON
69306
REGISTERED PROFESSIONAL ENGINEER
3/2/04

DATE	DESCRIPTION	REF NO.
03/02/04	REVISED ALL STREET AND PEDESTRIAN LTG	1
11/07/03	ISSUED FOR BID	

BASE BID
STREET LIGHT CONDUIT & POWER PLAN

SPECTRUM DRIVE EXTENSION

TOWN OF ADDISON, TEXAS

Huitt - Zollars, Inc.
3131 Mckinney Ave., Suite 600, Dallas, TX 75204
Phone (214) 871-3311/Fax (214) 871-0757

DESIGN	DRAWN	APPR.	SCALE	DATE	PROJECT NO.	NO.
HZI	HZI	DEM	1"=40'	NOV 2003	01-3220-01	54

DGNSPECIFICATIONS**

C:\proj\013220001\3220\tmp06.dgn MAR 02 2004 13:18:31

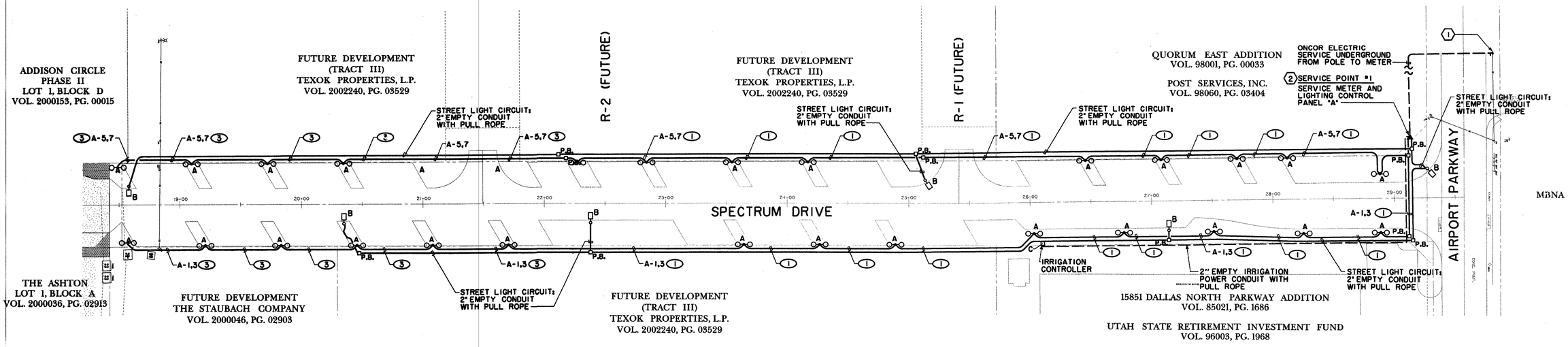

REFER TO NOTES AND DETAILS ON SHEET 55

1/54 BASE BID : LIGHTING PLAN

SCALE: 1"=40'-0"

KEY NOTES	
NUMBER	DESCRIPTION
1	ONCOR ELECTRIC SERVICE POLE WITH AERIAL-TO-UNDERGROUND TRANSITION.
2	PROVIDE METER BANK IN NEMA 3R ENCLOSURE. MOUNT ON STEEL CHANNEL FRAME. CONSTRUCT FRAME TO SUPPORT METERS, CONTACTOR PANEL, DISCONNECT SWITCHES, PANELBOARD, TIME SWITCH AND PHOTOCELL. REFER TO DETAILS ON SHEET 55.

LIGHTING CIRCUIT CONDUCTOR SCHEDULE	
MARK	WIRE
1	(2) #4, #8 GROUND
2	(2) #6, #8 GROUND
3	(2) #8, #8 GROUND

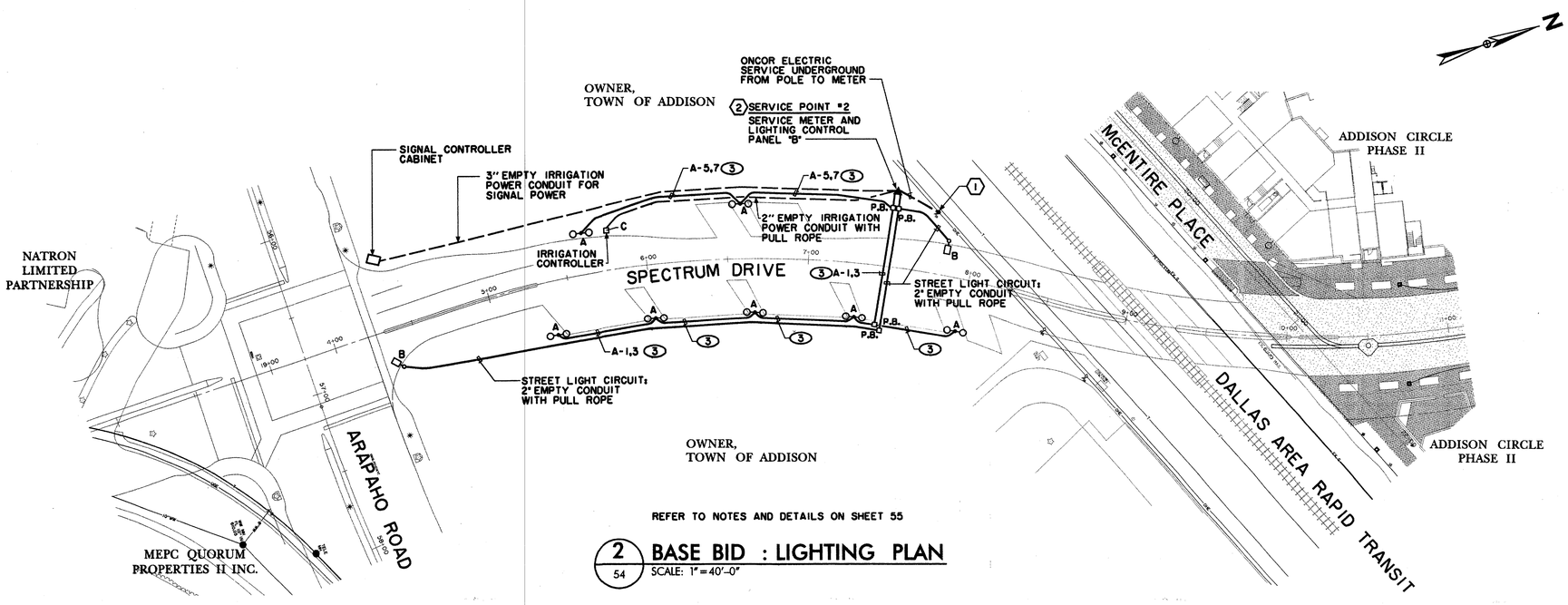

REFER TO NOTES AND DETAILS ON SHEET 55

2/54 BASE BID : LIGHTING PLAN

SCALE: 1"=40'-0"

BENCHMARKS:

"□" CUT SOUTHWEST CORNER OF CURB INLET, WEST SIDE OF SPECTRUM DRIVE, ±30' NORTH OF MORRIS AVENUE. ELEV. 611.84

"□" CUT ON TOP EAST END OF CURB INLET ON NORTH SIDE OF MORRIS AVENUE AND ±150' EAST OF QUORUM DRIVE CENTERLINE. ELEV. 616.39

"X" CUT ON CONC. TOP OF CURB OF MEDIAN NOSE ON SPECTRUM DRIVE AT INTERSECTION OF McENTIRE PLACE. ELEV. 619.30

STATE OF TEXAS
RICHARD L. DICKERSON
69306
PROFESSIONAL ENGINEER
11/5/03

DATE	DESCRIPTION	REF NO.
1/05/04	ISSUED FOR CONSTRUCTION	
11/07/03	ISSUED FOR BID	

BASE BID
STREET LIGHT CONDUIT & POWER PLAN
SPECTRUM DRIVE EXTENSION

TOWN OF ADDISON, TEXAS

Hulitt - Zollars, Inc.
3131 Mckinney Ave., Suite 600, Dallas, TX 75204
Phone (214) 871-3311/Fax (214) 871-0757

DESIGN	DRAWN	APPR.	SCALE	DATE	PROJECT NO.	NO.
HZI	HZI	DEM	1"=40'	AUG 2003	01-3220-01	54

hs\proj\01322001\dgn\32200UE06.DGN

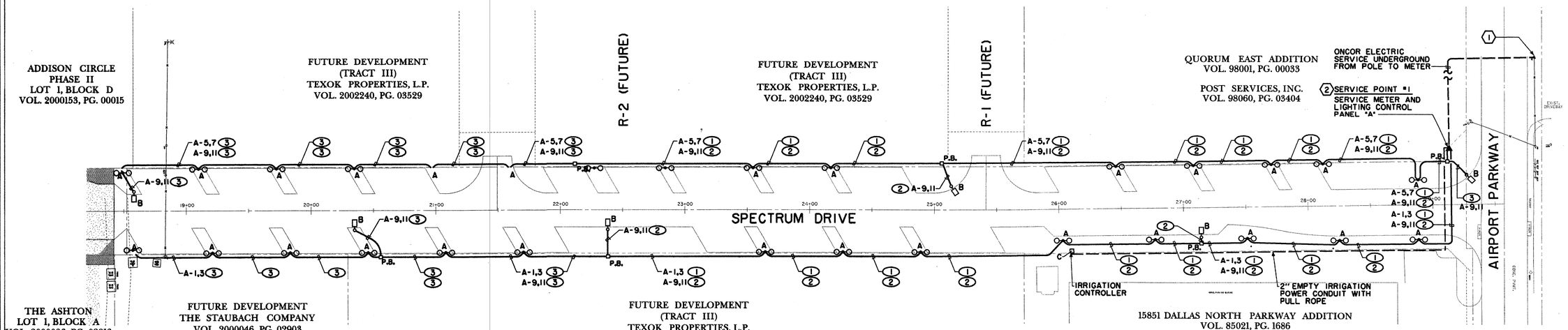

REFER TO NOTES AND DETAILS ON SHEET 55

1 / 54A ALTERNATE BID : LIGHTING PLAN

SCALE: 1"=40'-0"

KEY NOTES	
NUMBER	DESCRIPTION
1	ONCOR ELECTRIC SERVICE POLE WITH AERIAL-TO-UNDERGROUND TRANSITION.
2	PROVIDE METER BANK IN NEMA 3R ENCLOSURE. MOUNT ON STEEL CHANNEL FRAME. CONSTRUCT FRAME TO SUPPORT METERS, CONTACTOR PANEL, DISCONNECT SWITCHES, PANELBOARD, TIME SWITCH AND PHOTOCELL. REFER TO DETAILS ON SHEET 55.

LIGHTING CIRCUIT CONDUCTOR SCHEDULE	
MARK	WIRE
1	(2) #4, #8 GROUND
2	(2) #6, #8 GROUND
3	(2) #8, #8 GROUND

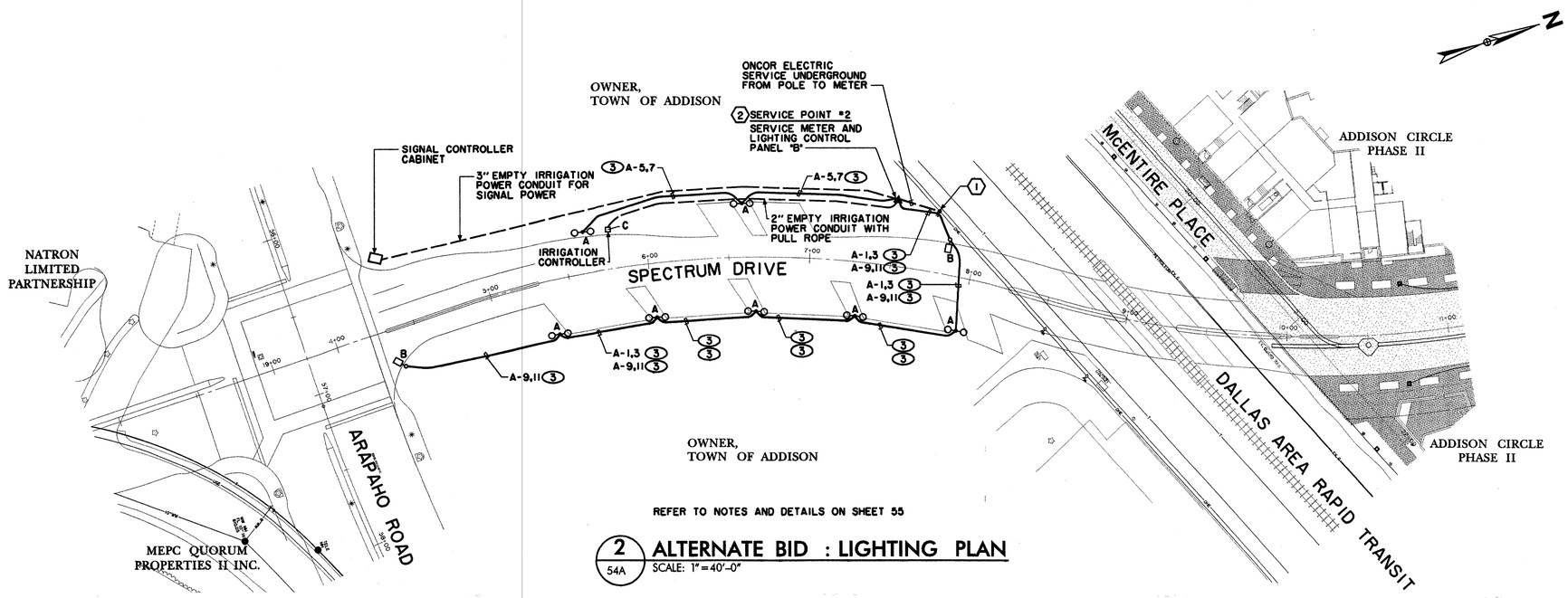

REFER TO NOTES AND DETAILS ON SHEET 55

2 / 54A ALTERNATE BID : LIGHTING PLAN

SCALE: 1"=40'-0"

BENCHMARKS:

"□" CUT SOUTHWEST CORNER OF CURB INLET, WEST SIDE OF SPECTRUM DRIVE, ±30' NORTH OF MORRIS AVENUE. ELEV. 611.84

"□" CUT ON TOP EAST END OF CURB INLET ON NORTH SIDE OF MORRIS AVENUE AND ±150' EAST OF QUORUM DRIVE CENTERLINE. ELEV. 616.39

"X" CUT ON CONC. TOP OF CURB OF MEDIAN NOSE ON SPECTRUM DRIVE AT INTERSECTION OF McENTIRE PLACE. ELEV. 619.30

STATE OF TEXAS
RICHARD L. DICKERSON
69306
LICENSED
PROFESSIONAL ENGINEER
11/5/03

DATE	DESCRIPTION	REF NO.
1/05/04	ISSUED FOR CONSTRUCTION	
11/07/03	ISSUED FOR BID	

ALTERNATE BID
STREET LIGHT CONDUIT & POWER PLAN
SPECTRUM DRIVE EXTENSION

TOWN OF ADDISON, TEXAS

Hu^^t - Zollars, Inc.
3131 Mckinney Ave., Suite 600, Dallas, TX 75204
Phone (214) 871-3311/Fax (214) 871-0757

DESIGN	DRAWN	APPR.	SCALE	DATE	PROJECT NO.	NO.
HZI	HZI	DEM	1"=40'	AUG 2003	01-3220-01	54A

hz \proj\01322001\dgn\322001UE08.DGN

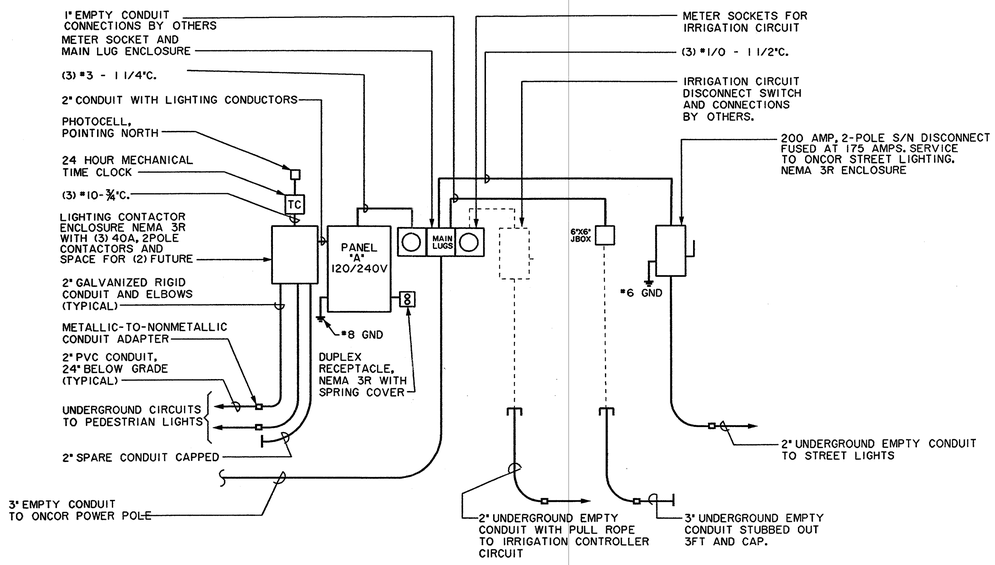

1 / 55 POWER RISER DIAGRAM – SERVICE POINT #1

SCALE: NONE

NOTE:

1. PROVIDE ALL INSTALLATION HARDWARE INCLUDING STEEL ENCLOSURE FOR SECURE INSTALLATION (DET. 3/55).
2. TERMINAL BLOCK ENCLOSURE TO HAVE SPACE FOR MIN. OF (4) CIRCUITS FOR FUTURE EXPANSION.
3. EXACT LOCATION OF PANEL TO BE DETERMINED AT PROJECT SITE.
4. SERIES RATING FOR CIRCUIT BREAKERS SHALL BE 65K AIC.
5. ENTIRE INSTALLATION TO BE RATED FOR NEMA 3R OUTDOOR INSTALLATION. PANEL AND SWITCH SHALL HAVE PROVISIONS FOR LOCKING.
6. EXACT LOCATIONS OF EQUIPMENT SHALL BE DETERMINED AT THE PROJECT SITE. COORDINATE LOCATIONS WITH ONCOR ELECTRIC UTILITY AND OWNER.
7. PROGRAM LIGHTS 'ON' BY PHOTO CELL AND 'OFF' BY TIME CLOCK.

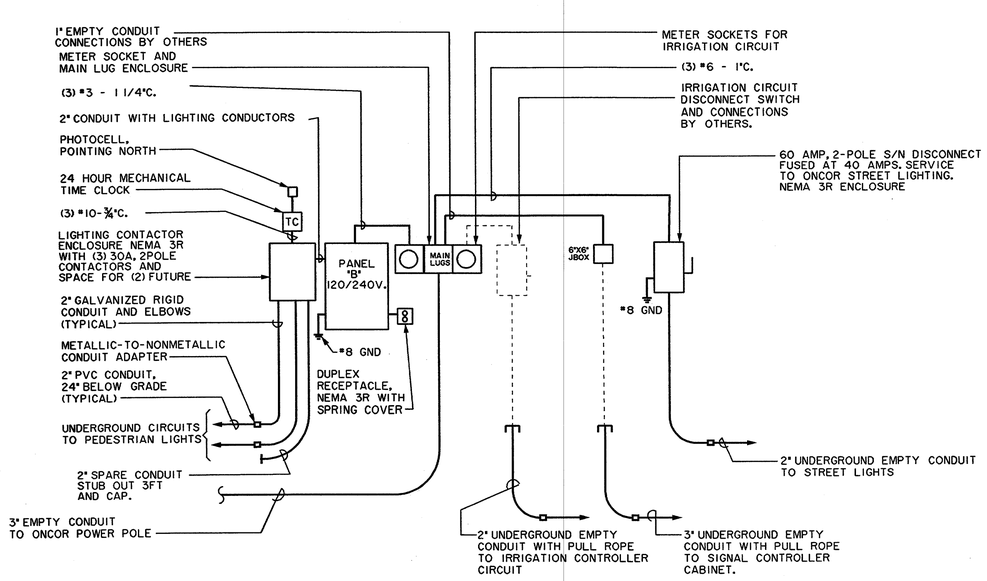

2 / 55 POWER RISER DIAGRAM – SERVICE POINT #2

SCALE: NONE

GENERAL NOTES

NUMBER	DESCRIPTION
1.	THE TERM 'PROVIDE' SHALL MEAN FOR THE CONTRACTOR TO FURNISH AND INSTALL A COMPLETE OPERATING SYSTEM.
2.	LOCATIONS OF ALL LIGHT FIXTURES, PULL BOXES AND ROUTING OF CONDUITS SHALL BE IDENTIFIED ON THE SITE BY STAKES AND PAINT PRIOR TO ANY EXCAVATION. REQUIREMENTS FOR CONDUIT ROUTING ARE PROVIDED ON DRAWINGS AND SPECIFICATIONS. OWNER WILL REVIEW AT THE SITE AND PROVIDE DIRECTIONS ON FIELD ADJUSTMENTS OF UP TO 10 FEET FROM LOCATIONS SHOWN ON THE DRAWINGS.
3.	CONTRACTOR SHALL COORDINATE STORM WATER, WASTEWATER, WATER, IRRIGATION AND ELECTRICAL CONDUIT TRENCHING AND INSTALLATION TO MINIMIZE THE DISTRUBANCE OF EXISTING TREE ROOTS.
4.	ALL IN-GROUND PULL BOXES ARE 12"x18"x12" DEEP CONCRETE WITH BOLT ON COVERS.

ELECTRICAL LEGEND

SYMBOL	DESCRIPTION
———	2" CONDUIT 24" BELOW GRADE FOR LIGHTING CIRCUITS FROM PANELBOARD TO PULL BOX AND LIGHT POLE.
P.B.	PULL BOX. (12"Wx12"Dx18"L)
A-1,3	CIRCUIT NUMBERS FROM PANELS AT SERVICE POINTS.
▲	ELECTRIC SERVICE POINT WITH UTILITY METERS, DISCONNECT SWITCHES, PANELBOARD & LIGHTING CONTROLS.
⊠	PEDESTRIAN LIGHT FIXTURE TYPE "A".
□●	STREET LIGHT FIXTURE TYPE "B".

CIRCUIT SCHEDULE-PANEL "A"

PANELBOARD	CIRCUIT BREAKER	CIRCUIT NUMBERS	LOAD SERVED
120/240 VOLT 1PH., 3WIRE WITH GROUND	40A/2P	A-1,3	PEDESTRIAN LIGHTS "A" (EAST)
	40A/2P	A-5,7	PEDESTRIAN LIGHTS "A" (WEST)
100 AMP MCB	40A/2P	A-9,11	SPARES
	20A/1P	A-2	DUPLEX RECEPTACLE
	20A/1P	A-4,6	SPARES
	SPACES	A-8,10,12	

NOTES TO CIRCUIT SCHEDULE:

1. PROVIDE A #8 EQUIPMENT GROUND CONDUCTOR IN ALL CONDUIT RUNS.
2. MAINTAIN CONDUCTOR SIZE SCHEDULED THROUGHOUT ENTIRE CIRCUIT.

CIRCUIT SCHEDULE-PANEL "B"

PANELBOARD	CIRCUIT BREAKER	CIRCUIT NUMBERS	LOAD SERVED
120/240 VOLT 1PH., 3WIRE WITH GROUND	30A/2P	B-1,3	PEDESTRIAN LIGHTS "A" (EAST)
	30A/2P	B-5,7	PEDESTRIAN LIGHTS "A" (WEST)
100 AMP MCB	30A/2P	B-9,11	SPARES
	20A/1P	B-2	DUPLEX RECEPTACLE
	20A/1P	B-4,6	SPARES
	SPACES	B-8,10,12	

NOTES TO CIRCUIT SCHEDULE:

1. PROVIDE A #8 EQUIPMENT GROUND CONDUCTOR IN ALL CONDUIT RUNS.
2. MAINTAIN CONDUCTOR SIZE SCHEDULED THROUGHOUT ENTIRE CIRCUIT.

LIGHT FIXTURE SCHEDULE

TYPE	DESCRIPTION	LAMP	MANUFACTURER AND CATALOG NO.S
A ⊠	CUSTOM STYLE (PEDESTRIAN)	70MHT6	SEE NOTE #2 BELOW.
A-POLE	SEE NOTE #5.		SEE NOTE #2 BELOW.
B □●	CUSTOM STYLE (STREET)	400MH/ 70MHT6	SEE NOTE #2 BELOW.
B-POLE	SEE NOTE #5.		SEE NOTE #2 BELOW.

LIGHTING FIXTURE/POLE NOTES:

1. PROVIDE REINFORCED CONCRETE BASE, ANCHOR BOLTS AND REQUIRED ACCESSORIES REFER TO DETAILS ON SHEET 13.
2. REFER TO "TOWN OF ADDISON LIGHTING MASTER PLAN SPECIFICATION FOR DESCRIPTION OF PEDESTRIAN AND STREET LIGHTS..
3. PROVIDE MATCHING BASE COVER FOR EACH FIXTURE. GROUT UNDER ALL POLE BASES.
4. ALL FIXTURES ARE 240 VOLT. PROVIDE DOUBLE FUSING IN EACH POLE
5. FUSE EACH INDIVIDUAL LIGHT FIXTURES/POLE ASSEMBLY.
6. REFER TO SPECIFICATIONS FOR ADDITIONAL INFORMATION.

BASE BID: TOWN OF ADDISON OWNS THE PEDESTRIAN LIGHT SYSTEM. ONCOR WILL ACCEPT OWNERSHIP OF STREET LIGHT SYSTEM AFTER CONSTRUCTION IS COMPLETE. REFER TO SHEET 54.

1. PROVIDE WIRE AND CONDUIT BELOW GRADE FROM ONCOR SERVICE POLE TO SERVICE POINTS.
2. PROVIDE STEEL WEATHERPROOF ENCLOSURE WITH CONCRETE PAD TO SUPPORT UTILITY METERS, PANELBOARDS AND LIGHTING CONTROL EQUIPMENT. REFER TO DETAIL 3/55.
3. PROVIDE ALL METER SOCKETS, DISCONNECT SWITCHES, PANELBOARDS AND LIGHTING CONTROL EQUIPMENT.
4. PROVIDE PEDESTRIAN LIGHT FIXTURES TYPE 'A', POLES, CONCRETE POLE BASE AND UNDERGROUND CONDUITS WITH POWER CIRCUITRY.
5. PROVIDE STREET LIGHT FIXTURES TYPE 'B', POLES, CONCRETE POLE BASE AND THE EMPTY UNDERGROUND CONDUIT SYSTEM. POWER WIRING WILL BE INSTALLED BY ONCOR.
6. PROVIDE EMPTY CONDUIT FOR IRRIGATION SYSTEM AND SIGNAL CONTROLLER CABINETS.

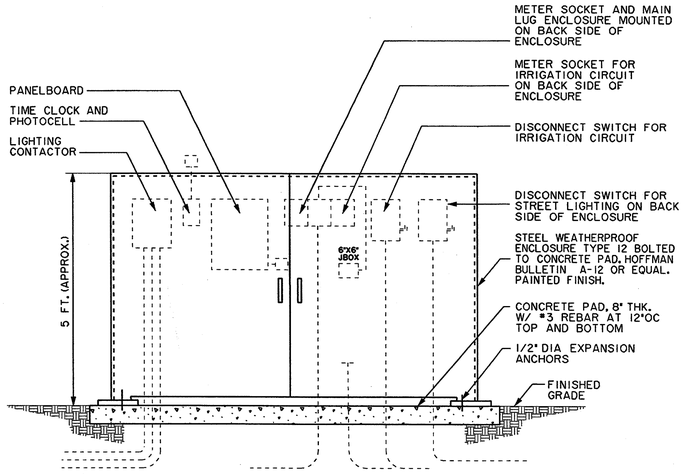

NOTE : ENCLOSURE DIMENSIONS AS REQUIRED TO SUPPORT PANELS. SUBMIT SHOP DRAWING FOR APPROVAL BEFORE CONSTRUCTION.

3 / 55 SERVICE POINT ENCLOSURE

SCALE: NONE

STATE OF TEXAS — RICHARD L. DICKERSON — 69306 — REGISTERED PROFESSIONAL ENGINEER — 3/2/04

DATE	DESCRIPTION	REF NO.
03/02/04	REVISED ALL STREET AND PEDESTRIAN LTG	1
11/07/03	ISSUED FOR BID	

BASE BID
STREET LIGHT NOTES & DETAILS

SPECTRUM DRIVE EXTENSION

TOWN OF ADDISON, TEXAS

Huitt - Zollars, Inc.
3131 Mckinney Ave., Suite 600, Dallas, TX 75204
Phone (214) 871-3311/Fax (214) 871-0757

DESIGN	DRAWN	APPR.	SCALE	DATE	PROJECT NO.	NO.
HZI	HZI	DEM	NONE	NOV 2003	01-3220-01	55

$$DGN$SPECIFICATION$$

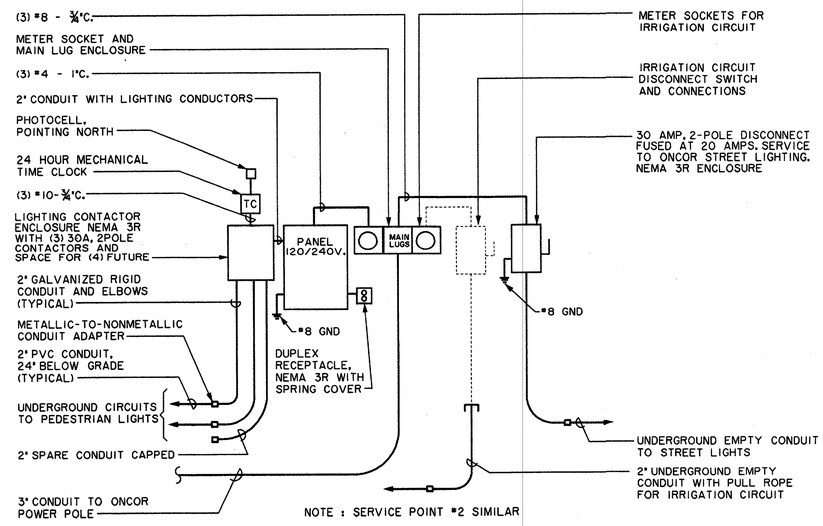

1/55 BASE BID : POWER RISER DIAGRAM – SERVICE POINT #1

SCALE: NONE

NOTE:

1. PROVIDE ALL INSTALLATION HARDWARE INCLUDING STEEL ENCLOSURE FOR SECURE INSTALLATION (DET. 3/55).
2. TERMINAL BLOCK ENCLOSURE TO HAVE SPACE FOR MIN. OF (4) CIRCUITS FOR FUTURE EXPANSION.
3. EXACT LOCATION OF PANEL TO BE DETERMINED AT PROJECT SITE.
4. SERIES RATING FOR CIRCUIT BREAKERS SHALL BE 65K AIC.
5. ENTIRE INSTALLATION TO BE RATED FOR NEMA 3R OUTDOOR INSTALLATION. PANEL AND SWITCH SHALL HAVE PROVISIONS FOR LOCKING.
6. EXACT LOCATIONS OF EQUIPMENT SHALL BE DETERMINED AT THE PROJECT SITE. COORDINATE LOCATIONS WITH ONCOR ELECTRIC UTILITY AND OWNER.
7. PROGRAM LIGHTS "ON" BY PHOTO CELL AND "OFF" BY TIME CLOCK.

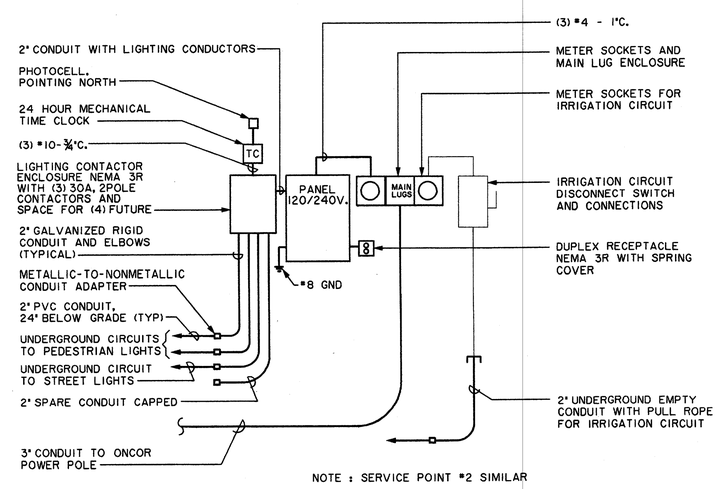

2/55 ALTERNATE BID : POWER RISER DIAGRAM – SERVICE POINT #1

SCALE: NONE

GENERAL NOTES

NUMBER	DESCRIPTION
1.	THE TERM 'PROVIDE' SHALL MEAN FOR THE CONTRACTOR TO FURNISH AND INSTALL A COMPLETE OPERATING SYSTEM.
2.	LOCATIONS OF ALL LIGHT FIXTURES, PULL BOXES AND ROUTING OF CONDUITS SHALL BE IDENTIFIED ON THE SITE BY STAKES AND PAINT PRIOR TO ANY EXCAVATION. REQUIREMENTS FOR CONDUIT ROUTING ARE PROVIDED ON DRAWINGS AND SPECIFICATIONS. OWNER WILL REVIEW AT THE SITE AND PROVIDE DIRECTIONS ON FIELD ADJUSTMENTS OF UP TO 10 FEET FROM LOCATIONS SHOWN ON THE DRAWINGS.
3.	CONTRACTOR SHALL COORDINATE STORM WATER, WASTEWATER, WATER, IRRIGATION AND ELECTRICAL CONDUIT TRENCHING AND INSTALLATION TO MINIMIZE THE DISTRUBANCE OF EXISTING TREE ROOTS.
4.	ALL PULL BOXES ARE 12"x18"x12" DEEP CONCRETE BOX WITH BOLT ON CONCRETE COVER OF BOX TO ALLOW CONDUCTORS TO LOOP THROUGH BOX.

ELECTRICAL LEGEND

SYMBOL	DESCRIPTION
———	2" CONDUIT 24" BELOW GRADE FOR LIGHTING CIRCUITS FROM PANELBOARD TO PULL BOX AND LIGHT POLE.
P.B.	PULL BOX. (12"Wx12"Dx18"L)
A-1,3	CIRCUIT NUMBERS FROM PANELS AT SERVICE POINTS.
▲	ELECTRIC SERVICE POINT WITH UTILITY METERS, DISCONNECT SWITCHES, PANELBOARD & LIGHTING CONTROLS.
O-O	PEDESTRIAN LIGHT FIXTURE TYPE 'A'.
□-●	STREET LIGHT FIXTURE TYPE 'B'.

CIRCUIT SCHEDULE

PANELBOARD	CIRCUIT BREAKER	CIRCUIT NUMBERS	LOAD SERVED
PANEL 'A' 120/240 VOLT 1PH., 3WIRE WITH GROUND	20A/2P	A-1,3	PEDESTRIAN LIGHTS 'A' (EAST)
	20A/2P	A-5,7	PEDESTRIAN LIGHTS 'A' (WEST)
	20A/2P	A-9,11	STREET LIGHTS 'B' (ALTERNATE)
80 AMP MCB	SPACES	A-13,15,17	
(TYPICAL FOR PANEL 'B')	20A/1P	A-2	DUPLEX RECEPTACLE
	SPACES	A-4,6,8	
	SPACES	A-10,12	
	SPACES	A-14,16,18	

NOTES TO CIRCUIT SCHEDULE:

1. PROVIDE A #8 EQUIPMENT GROUND CONDUCTOR IN ALL CONDUIT RUNS.
2. MAINTAIN CONDUCTOR SIZE SCHEDULED THROUGHOUT ENTIRE CIRCUIT.
3. CIRCUITS SCHEDULED ABOVE ARE ALL RUN IN 2" CONDUIT.

LIGHT FIXTURE SCHEDULE

TYPE	DESCRIPTION	LAMP	MANUFACTURER	CATALOG NO.	FINISH
A O-O	CUSTOM STYLE (PEDESTRIAN)	175 MH	BEGA	9802MH (2 LIGHTS 180 DEG. APART)	BLACK
A-POLE	LENGTH 15'-8" ROUND HINGED POLE		BEGA	1508HR	BLACK
B □-●	CUSTOM STYLE (STREET)	250 MH	----	SEE NOTE #7 BELOW.	BLACK
B-POLE	LENGTH 30' - 6" SQUARE POLE		----	SEE NOTE #7 BELOW.	BLACK

NOTES:

1. PROVIDE REINFORCED CONCRETE BASE, ANCHOR BOLTS AND REQUIRED ACCESSORIES. REFER TO DETAILS ON SHEET 13.
2. BID SHALL BE BASED UPON THE ABOVE LISTED LIGHT FIXTURES TO MATCH EXISTING LIGHTING INSTALLATIONS. SUBSTITUTIONS MUST BE APPROVED BY OWNER PRIOR TO AWARD OF CONTRACT.
3. PROVIDE MATCHING BASE COVER FOR EACH FIXTURE. GROUT UNDER ALL POLE BASES.
4. ALL FIXTURES ARE 240 VOLT. PROVIDE DOUBLE FUSING IN EACH POLE
5. A CUSTOM HINGED POLE IS REQUIRED FOR FIXTURE TYPE A & B (45" HINGED).
6. REFER TO SPECIFICATIONS FOR ADDITIONAL INFORMATION.
7. FOR DESCRIPTION OF TYPE 'B' STREET LIGHT FIXTURE AND POLE REFER TO 'SPECIAL PROVISION MISCELLANEOUS DETAILS' IN THE SPECIFICATIONS.

BASE BID: (REF. SHEET 54) TOWN OF ADDISON OWNS THE PEDESTRIAN LIGHT SYSTEM. ONCOR WILL ACCEPT OWNERSHIP OF STREET LIGHT SYSTEM

1. PROVIDE (1) 3" EMPTY CONDUIT BELOW GRADE FROM ONCOR SERVICE POLE TO SERVICE POINT.
2. PROVIDE STEEL WEATHERPROOF ENCLOSURE WITH CONCRETE PAD TO SUPPORT UTILITY METERS, PANELBOARDS AND LIGHTING CONTROL EQUIPMENT. REFER TO DETAIL 3/55.
3. PROVIDE ALL METER SOCKETS, DISCONNECT SWITCHES, PANELBOARDS AND LIGHTING CONTROL EQUIPMENT.
4. PROVIDE PEDESTRIAN LIGHT FIXTURES TYPE 'A', POLES, CONCRETE POLE BASE AND UNDERGROUND CONDUITS WITH POWER CIRCUITRY.
5. PROVIDE STREET LIGHT FIXTURES TYPE 'B', POLES, CONCRETE POLE BASE AND EMPTY UNDERGROUND CONDUIT SYSTEM. POWER WIRING WILL BE INSTALLED BY ONCOR.
6. PROVIDE EMPTY CONDUIT FOR IRRIGATION SYSTEM.

ALTERNATE BID: (REF. SHEET 54A) TOWN OF ADDISON OWNS THE PEDESTRIAN LIGHT SYSTEM AND THE STREET LIGHT SYSTEM

1. IN ADDITION TO THE BASE BID PROVIDE POWER WIRING TO STREET LIGHTS, STREET LIGHT AND PEDESTRIAN LIGHT POWER CIRCUITS INSTALLED IN A COMMON CONDUIT SYSTEM.

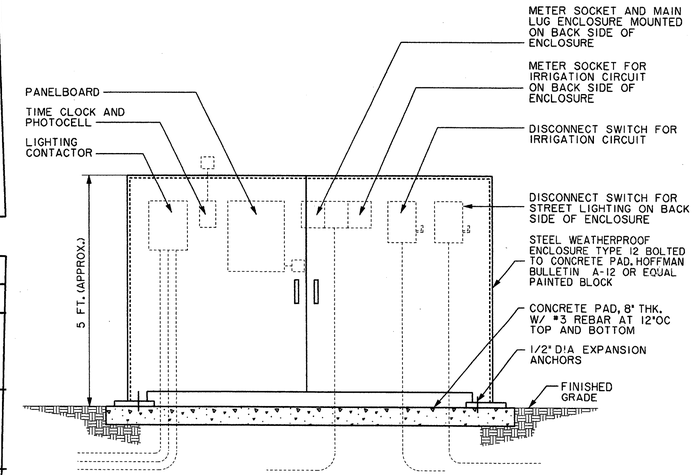

NOTE : ENCLOSURE DIMENSIONS AS REQUIRED TO SUPPORT PANELS. SUBMIT SHOP DRAWING FOR APPROVAL BEFORE CONSTRUCTION.

3/55 SERVICE POINT ENCLOSURE

SCALE: NONE

11/6/03

STATE OF TEXAS
RICHARD L. DICKERSON
69306
LICENSED
PROFESSIONAL ENGINEER

DATE	DESCRIPTION	REF NO.
1/05/04	ISSUED FOR CONSTRUCTION	
11/07/03	ISSUED FOR BID	

STREET LIGHT NOTES & DETAILS

SPECTRUM DRIVE EXTENSION

TOWN OF ADDISON, TEXAS

Huitt - Zollars, Inc.
3131 Mckinney Ave., Suite 600, Dallas, TX 75204
Phone (214) 871-3311/Fax (214) 871-0757

DESIGN	DRAWN	APPR.	SCALE	DATE	PROJECT NO.	NO.
HZI	HZI	DEM	NONE	AUG 2003	01-3220-01	55

ht \proj\01322001\dgn\32200IUEO7.DGN

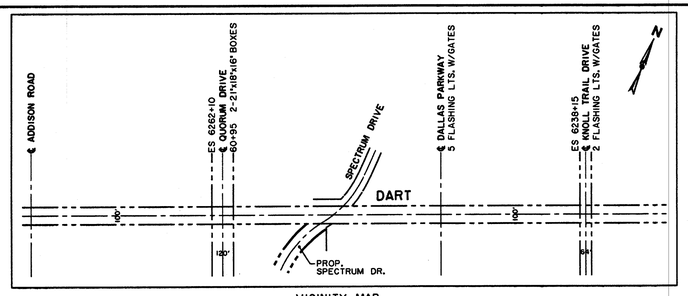

VICINITY MAP
SCALE 1"=400'

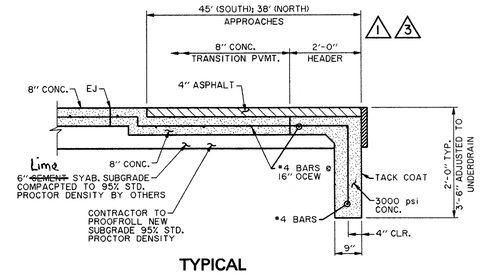

TYPICAL
APPROACH SECTION
NTS

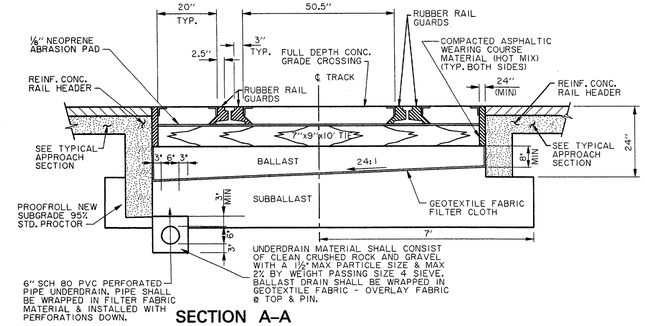

SECTION A-A
TYPICAL SECTION
NTS

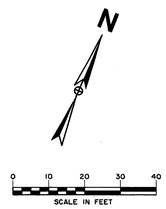

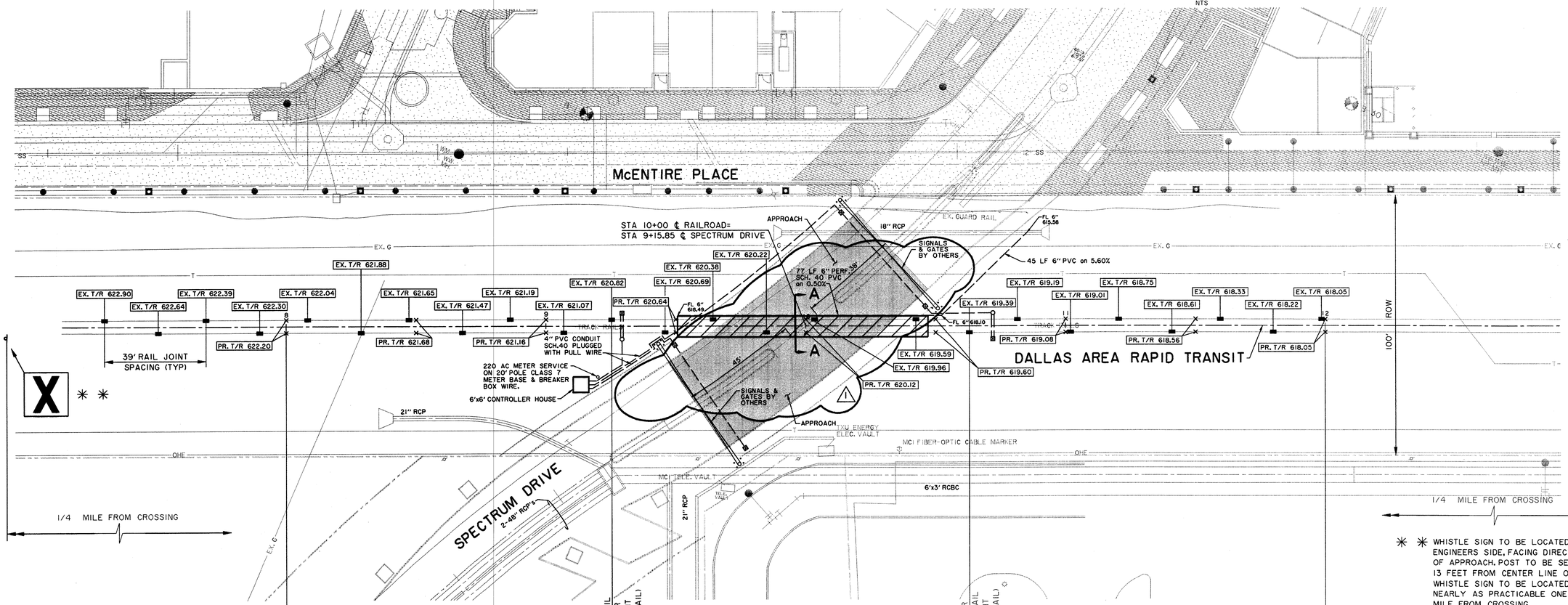

✳ ✳ WHISTLE SIGN TO BE LOCATED ON ENGINEERS SIDE, FACING DIRECTION OF APPROACH. POST TO BE SET 13 FEET FROM CENTER LINE OF TRACK. WHISTLE SIGN TO BE LOCATED AS NEARLY AS PRACTICABLE ONE-FOURTH MILE FROM CROSSING.

STATE OF TEXAS
DAVID E. MEYERS
81512
REGISTERED PROFESSIONAL ENGINEER
1/5/04

GENERAL NOTES

1. ALL TRACK MATERIALS REMOVED SHALL BECOME THE PROPERTY OF THE CONTRACTOR.
2. CONTRACTOR TO FURNISH AND INSTALL ALL TRACKWORK MATERIALS.
3. (3) REMOVE 2-138.5' 85# RAILS AND REPLACE WITH 2-138.5' 136# (NO. 1 RELAY RAILS CWR).
4. REMOVE EXISTING TIMBER CROSSTIES AND REPLACE WITH NEW TIMBER CROSSTIES WITHIN THE LIMITS SHOWN.
5. (2) REMOVE EXISTING BALLAST TO EXISTING SUBBALLAST WITHIN LIMITS OF OF PROPOSED 96' GRADE CROSSING; REPLACE WITH CLEAN BALLAST MINIMUM DEPTH OF 8" BELOW CROSSTIES.
6. NEW TRACK SHALL BE COMPLETE, FINAL ALGINED AND SURFACED BEFORE PREFABRICATED CROSSING INSTALLATION.
7. INSTALL 96 TRACK FEET OF NEW PREFABRICATED CONCRETE GRADE CROSSING.
8. PROVIDE THE RUNNING SURFACE OF EACH PRE-FABRICATED PANEL WHEN INSTALLED, 1/8" BELOW THE TOP OF THE RUNNING RAIL.

STA 8+00
T/R ELEV 622.22

LIMITS OF EXISTING TRACK
ALIGN AND SURFACE

EXISTING TRACK 112# RERAIL
PROPOSED TRACK 136# CWR
INSTALL COMPROMISE JOINT
BOTH RAILS (CUT SOUTH RAIL)

LIMITS OF TRACKWORK
REMOVE 138.5' FEET EXISTING TRACK AND REPLACE WITH 136# CWR
INSTALL 96' LF PREFABRICATED CONCRETE GRADE CROSSING

PROPOSED TRACK 136# CWR
EXISTING TRACK 112# RERAIL
INSTALL COMPROMISE JOINT
BOTH RAILS (CUT NORTH RAIL)

LIMITS OF EXISTING TRACK
ALIGN AND SURFACE

NOTE:
RAILROAD SIGNALIZATION DESIGN AND CONSTRUCTION BY OTHERS. (SEPARATE CONTRACT)

DATE	DESCRIPTION	REF NO.
1/05/04	ISSUED FOR CONSTRUCTION	
12/16/03	REVISED APPROACH TRANSITION	3
11/26/03	REVISED NOTE #3 & NOTE #5	2
11/20/03	ADDENDUM NO. 1	1
11/07/03	ISSUED FOR BID	

RAILROAD CROSSING PLAN

SPECTRUM DRIVE EXTENSION

TOWN OF ADDISON, TEXAS

Huitt - Zollars, Inc.
3131 Mckinney Ave., Suite 600, Dallas, TX 75204
Phone (214) 871-3311/Fax (214) 871-0757

DESIGN	DRAWN	APPR.	SCALE	DATE	PROJECT NO.	NO.
HZI	HZI	DEM	1"=20'	NOV 2003	01-3220-01	56

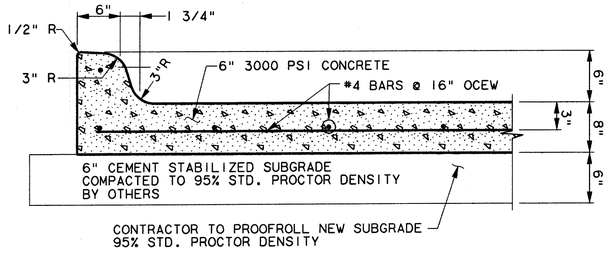

SECTION A/1
NTS

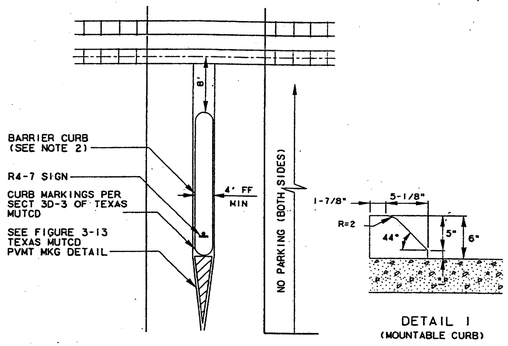

DETAIL 1
(MOUNTABLE CURB)

NOTES:

1. MEDIAN LENGTH DESIRABLE-150' MINIMUM-75' (UNLESS OPERATIONAL CONSIDERATIONS REQUIRE FURTHER REDUCTION.
2. FOR TWO(2) LANE STREETS MEDIAN CURB SHOULD BE IN ACCORDANCE WITH DETAIL.

F-F WIDTHS (FT)

STREET	MEDIAN	LANE (NO)
26-36	4-10	11-13 (2)
44	4	10 (4)

DART GRADE CROSSING LAYOUT TYPICAL

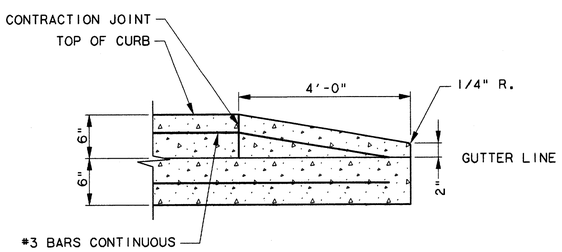

CURB TERMINAL DETAIL 1
NTS

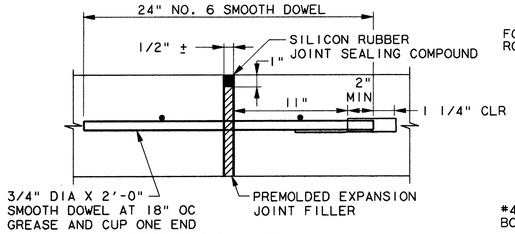

EXPANSION JOINT

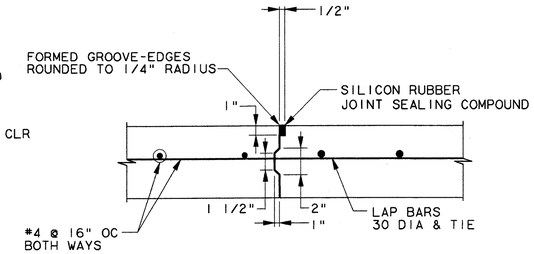

CONSTRUCTION JOINT

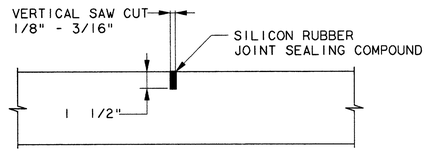

SAWED DUMMY JOINT

JOINT DETAILS 2
NTS

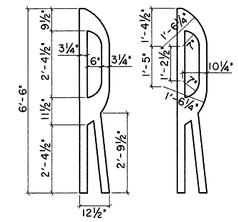

STANDARD R DETAIL

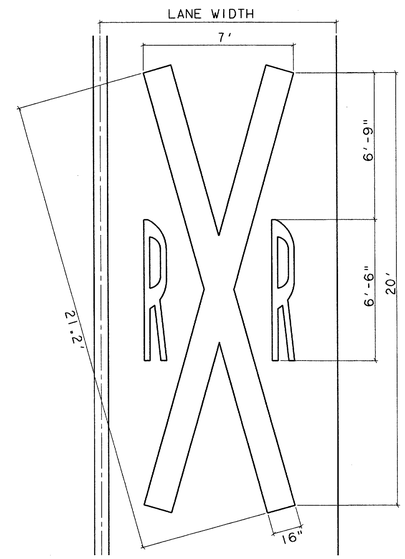

NOTE:
ALL STRIPING SHALL BE
REFLECTORIZED WHITE
PREFORMED THERMOPLASTIC.

STANDARD RXR SYMBOL 4
NTS

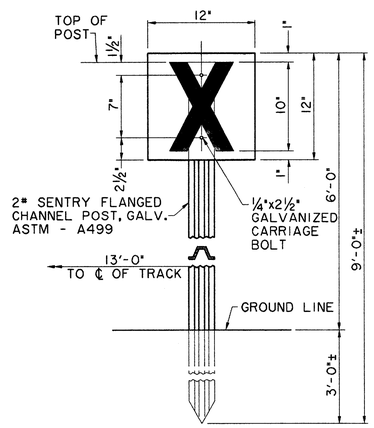

1. MATERIAL: PLATES TO BE 0.091" THICK SHEET ALUMINUM, MILL FINISH, SIMILARTO ALCOA 6061-T6. BOLTS TO BE ALUMINUM OR SUITABLE ALLOY.
2. FINISH: FACE OF PLATE TO BE COATED WITH WIDE ANGLE SILVER SCOTCHLITE REFLECTIVE SHEETING WITH BLACK SCOTCHCAL LETTERS; BACK OF PLATES TO BE NATURAL FINISH.

WHISTLE SIGN DETAIL 3
NTS

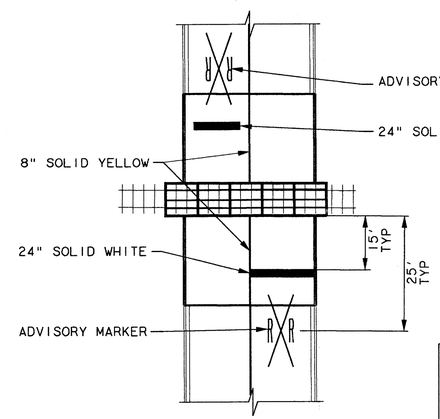

NOTE:
ALL STRIPING SHALL BE
REFLECTORIZED WHITE
PREFORMED THERMOPLASTIC.

STRIPING DETAIL 5
NTS

STATE OF TEXAS
DAVID E. MEYERS
81512
REGISTERED
PROFESSIONAL ENGINEER
1/5/04

DATE	DESCRIPTION	REF NO.
1/05/04	ISSUED FOR CONSTRUCTION	
11/07/03	ISSUED FOR BID	

RAILROAD CROSSING DETAILS

SPECTRUM DRIVE EXTENSION

TOWN OF ADDISON, TEXAS

Huitt - Zollars, Inc.
3131 Mckinney Ave., Suite 600, Dallas, TX 75204
Phone (214) 871-3311/Fax (214) 871-0757

DESIGN	DRAWN	APPR.	SCALE	DATE	PROJECT NO.	NO.
HZI	HZI	DEM	NTS	NOV 2003	01-3220-01	57

h:\proj\0132200\dgn\RAILROAD3.DGN

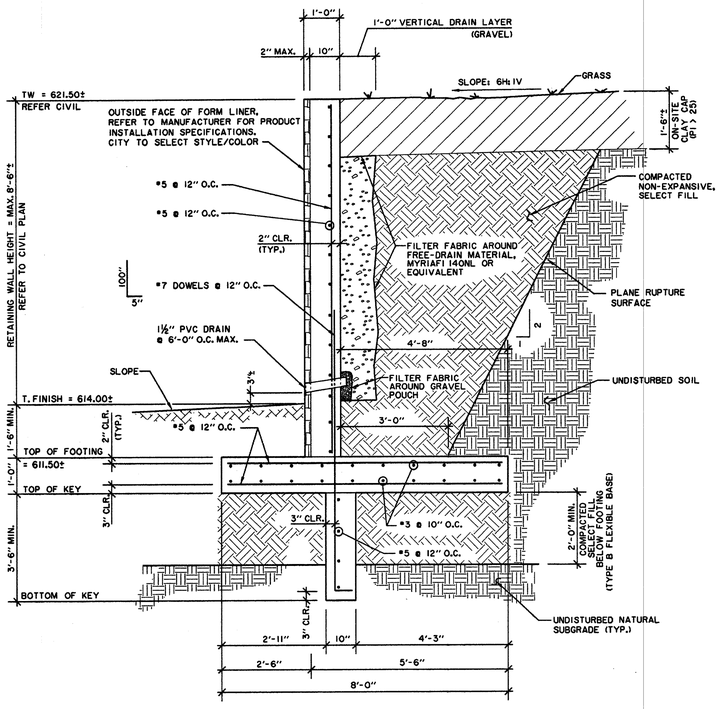

1 TYPICAL SECTION
SCALE: 1/2"=1'-0" (TYPE 1)

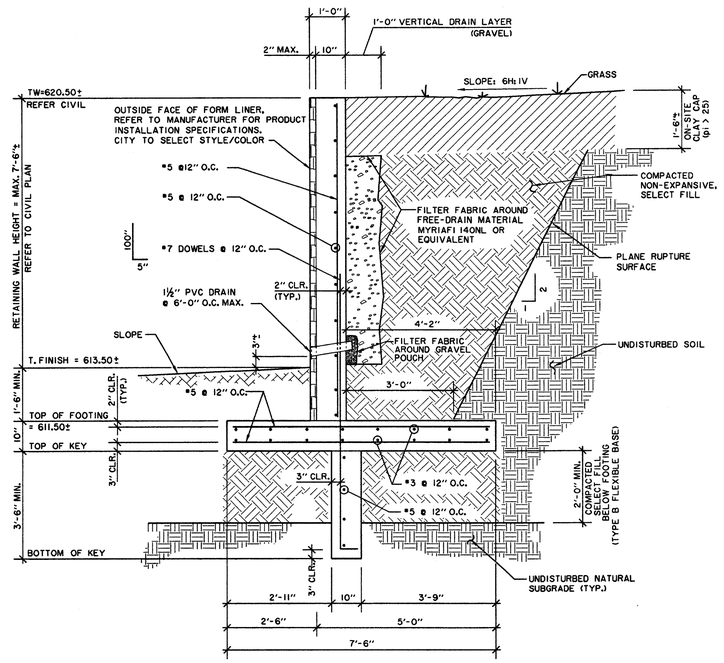

2 TYPICAL SECTION
SCALE: 1/2"=1'-0" (TYPE 2)

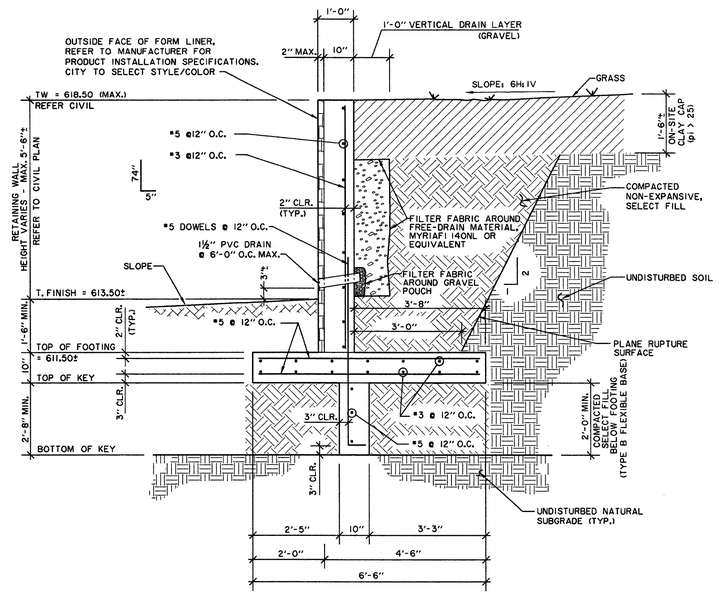

3 TYPICAL SECTION
SCALE: 1/2"=1'-0" (TYPE 3)

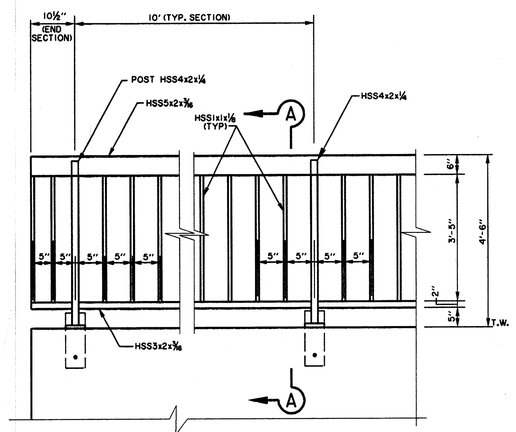

4 ELEVATION - BICYCLE RAIL W/ PILASTER
SCALE: ½"=1'-0"

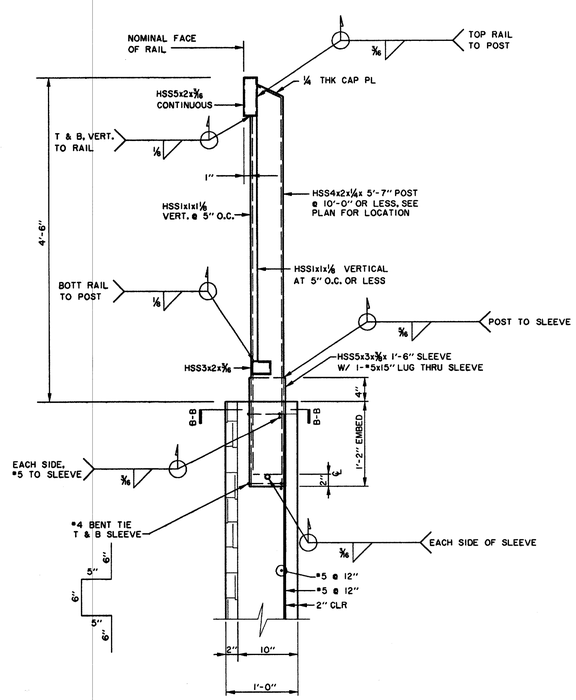

A-A TYP DETAIL
SCALE: 1"=1'-0"

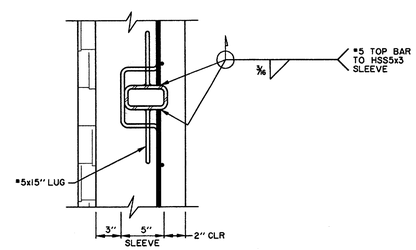

B-B DETAIL
SCALE: 1½"=1'-0"

STATE OF TEXAS
CHRIS M. GILSTRAP
80602
REGISTERED PROFESSIONAL ENGINEER
01-05-04

DATE	DESCRIPTION	REF NO.
1/05/04	ISSUED FOR CONSTRUCTION	
11/07/03	ISSUED FOR BID	

RETAINING WALL DETAILS

SPECTRUM DRIVE EXTENSION

TOWN OF ADDISON, TEXAS

Huitt - Zollars, Inc.
3131 Mckinney Ave., Suite 600, Dallas, TX 75204
Phone (214) 871-3311/Fax (214) 871-0757

DESIGN	DRAWN	APPR.	SCALE	DATE	PROJECT NO.	NO.
HZI	HZI	CMG	½"=1'	NOV 2003	01-3220-01	59

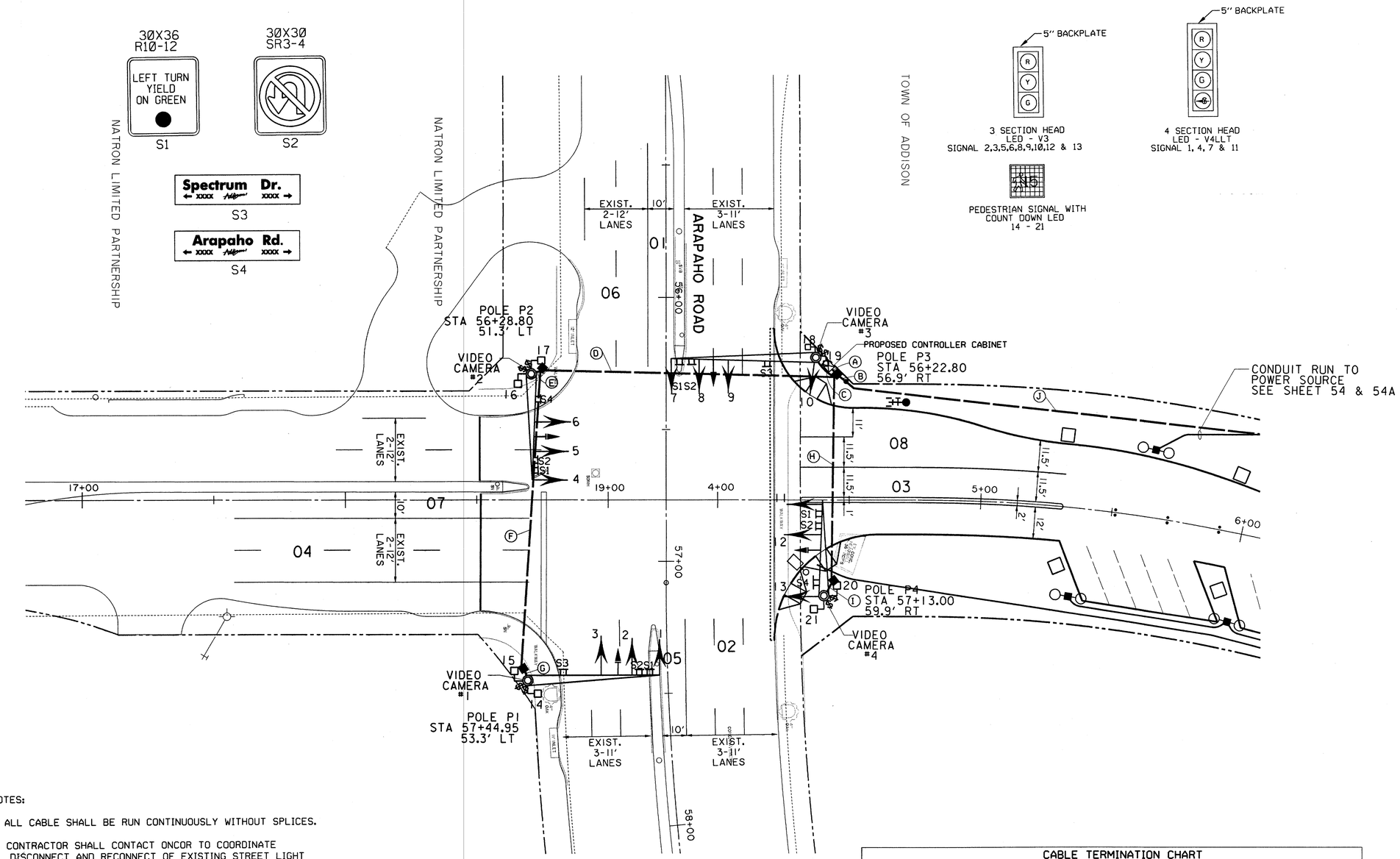

LEGEND	
	MAST ARM/SIGNAL POLE
	SIGNAL HEAD
	PEDESTRIAN SIGNAL HEAD
$	PUSH-BUTTON (PED.HEAD)
■	TY C GROUND BOX
	PROP.CONDUIT (P.V.C.) SEE CONDUIT RUN TABLE
	PROP. OPTICOM
●	PROP. METER PEDESTAL
⊠	CONTROLLER CABINET
TT	MASTARM SIGN
Ⓐ	CONDUIT RUN NUMBER
1	SIGNAL HEAD NUMBER
	WHEELCHAIR RAMP

NOTES:

1. ALL CABLE SHALL BE RUN CONTINUOUSLY WITHOUT SPLICES.
2. CONTRACTOR SHALL CONTACT ONCOR TO COORDINATE DISCONNECT AND RECONNECT OF EXISTING STREET LIGHT CIRCUIT.
3. VIDEO CAMERAS SHALL BE MOUNTED ON TOP OF SIGNAL POLE AND AIMED IN THE SAME DIRECTION AS SIGNAL HEADS.
4. CONTRACTOR SHALL PROVIDE AND INSTALL BACK-LIGHT ILLUMINATED STREET NAME SIGNS BUILT TO THE TOWN OF ADDISON SPECIFICATION. THE SIGN MANUFACTURER WILL BE J & A MANUFACTURING IN GARLAND, TEXAS.
5. EXACT LOCATION OF SIGNAL POLES, CONTROLLER CABINET, GROUND BOXES, ETC. TO BE APPROVED BY THE ENGINEER IN THE FIELD.
6. THE CONTROLLER CABINET SHOULD BE INSTALLED SO THAT THE CABINET DOOR FACES AWAY FROM THE INTERSECTION.
7. ONCOR WILL RELOCATE THE EXISTING ELECTRICAL POWER SOURCE AND SET THE METER POINT IN THE CLOSE VICINITY OF THE CONTROLLER CABINET. CONDUIT RUN J WILL BE INSTALLED BY ONCOR.
8. THE LED SIGNAL HEADS WILL BE CHAPEL HILL TYPE, MANUFACTURED BY TRAFFIC PARTS, INC. IN SPRING, TEXAS.

CABLE TERMINATION CHART

CABLE	P1		P2		P3		P4	
CONDUCTOR	S.H. NO.		S.H. NO.		S.H. NO.		S.H. NO.	
BLACK	SPARE		SPARE		SPARE		SPARE	
WHITE	COMMON		COMMON		COMMON		COMMON	
RED	1 - 3	R	4 - 6	R	7 - 10	R	11 - 13	R
GREEN	1 - 3	Y	4 - 6	Y	7 - 10	Y	11 - 13	Y
ORANGE	1 - 3	G	4 - 6	G	7 - 10	G	11 - 13	G
BLUE	1	←G	4	←G	7	←G	11	←G
WHITE / BLACK	1	←Y	4	←Y	7	←Y	11	←Y
RED / BLACK	SPARE		SPARE		SPARE		SPARE	
GREEN / BLACK	SPARE		SPARE		SPARE		SPARE	
ORANGE / BLACK	14	W	16	W	18	W	20	W
BLUE / BLACK	15	W	17	W	19	W	21	W
BLACK / WHITE	14	DW	16	DW	18	DW	20	DW
RED / WHITE	15	DW	17	DW	19	DW	21	DW
GREEN / WHITE	PB 14	04	PB 16	06	PB 18	08	PB 20	02
BLUE / WHITE	PB 15	06	PB 17	08	PB 19	02	PB 21	04
BLACK / RED	PB COM		PB COM		PB COM		PB COM	

BENCHMARKS:

"□" CUT SOUTHWEST CORNER OF CURB INLET, WEST SIDE OF SPECTRUM DRIVE, ±30' NORTH OF MORRIS AVENUE.
ELEV. 611.84

"X" CUT ON CONC. TOP OF CURB OF MEDIAN NOSE ON SPECTRUM DRIVE AT INTERSECTION OF McENTIRE PLACE.
ELEV. 619.30

STATE OF TEXAS
DAVID E. MEYERS
81512
REGISTERED PROFESSIONAL ENGINEER
1/5/04

DATE	DESCRIPTION	REF NO.
1/05/04	ISSUED FOR CONSTRUCTION	
11/07/03	ISSUED FOR BID	

SIGNALIZATION PLAN

SPECTRUM DRIVE EXTENSION

TOWN OF ADDISON, TEXAS

Huitt - Zollars, Inc.
3131 Mckinney Ave., Suite 600, Dallas, TX 75204
Phone (214) 871-3311/Fax (214) 871-0757

DESIGN	DRAWN	APPR.	SCALE	DATE	PROJECT NO.	NO.
HZI	HZI	DEM	1"=20'	NOV 2003	01-3220-01	60

CONDUIT RUNS

RUN NO.	SIZE/TYPE CONDUIT	CABLE TYPE: #6 XHHW WIRE (POWER)	#6 AWG CU WIRE (GROUND)	4 CONDR #20 CABLE OPT	16 CONDR #14 CABLE	# 18 AWG VIDEO CABLE	#18 AWG CU WIRE (ILSNS)	LENGTH OF RUN (FEET)
A	2-4"	3	1	4	4	4	4	1.5
B	3"	3	1					2
C	3"		1	1	1	1	1	8.5
*D	4"		1	2	2	2	2	110
E	3"		1	1	1	1	1	2
*F	4"		1	1	1	1	1	111.5
G	3"		1	1	1	1	1	2
H	4"		1	1	1	1	1	76
I	3"		1	1	1	1	1	3.5
**J	3"	3	1					400
ITEM TOTAL		1210.5	717	429.5	429.5	429.5	429.5	

* BORED CONDUIT
** INSTALLED BY OTHERS

SIGNAL HEADS

NO	TYPE	PHASE	BACKPLATE 3 SEC	BACKPLATE 4 SEC	12" VEH SEC	PED SIG SEC
1	V4LLT	01		1	4	
2	V3	06	1		3	
3	V3	06	1		3	
4	V4LLT	03		1	4	
5	V3	08	1		3	
6	V3	08	1		3	
7	V4LLT	05		1	4	
8	V3	02	1		3	
9	V3	02	1		3	
10	V3	02	1		3	
11	V4LLT	07		1	4	
12	V3	04	1		3	
13	V3	04	1		3	
14	PED					1
15	PED					1
16	PED					1
17	PED					1
18	PED					1
19	PED					1
20	PED					1
21	PED					1
TOTAL			9	4	43	8

SIGNAL HEAD AND POLE PLACEMENT

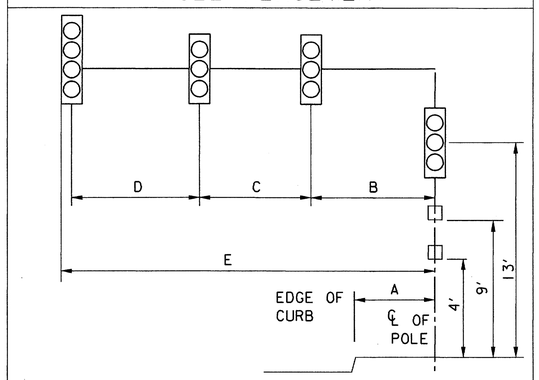

SIGNAL HEAD AND POLE PLACEMENT (FEET)					
POLE NUMBER	A	B	C	D	E
P1	12.2	27.5	12	10.5	50
P2	13.8	18	11	11	40
P3	13.3	33	11	10.5	55
P4	17	23	12	-	36

GROUND BOX SUMMARY

TYPE	EACH
TYPE A W/APRON	
TYPE A W/O APRON	
TYPE C W/APRON	4

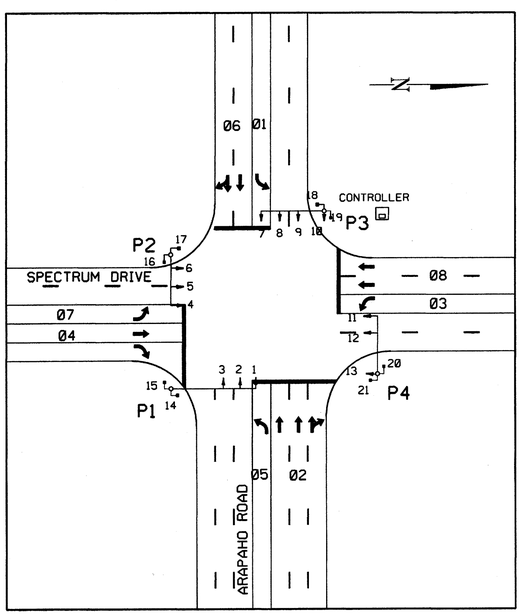

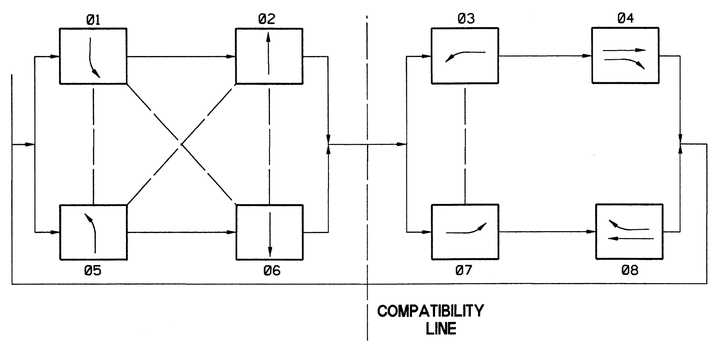

PHASE DIAGRAM

STATE OF TEXAS
DAVID E. MEYERS
81512
REGISTERED PROFESSIONAL ENGINEER
1/05/04
11/07/03
11/5/04

DATE	DESCRIPTION	REF NO.
1/05/04	ISSUED FOR CONSTRUCTION	
11/07/03	ISSUED FOR BID	

SIGNALIZATION PLAN

SPECTRUM DRIVE EXTENSION

TOWN OF ADDISON, TEXAS

Huitt - Zollars, Inc.
3131 Mckinney Ave., Suite 600, Dallas, TX 75204
Phone (214) 871-3311/Fax (214) 871-0757

DESIGN	DRAWN	APPR.	SCALE	DATE	PROJECT NO.	NO.
HZI	HZI	DEM	1"=20'	NOV 2003	01-3220-01	61

hz:\proj\01322001\dgn\322001SG02.DGN

TRAFFIC SIGNAL QUANTITIES SUMMARY

ITEM	UNIT	TOTAL QUANTITIES
TS-2 CABINET & ECONOLITE ASC/2S - 1000 (TS-2) CONTROLLER ASSEMBLY	EACH	1
TRAFFIC SIGNAL CONTROLLER FOUNDATION	EACH	1
PULL BOXES (TY C) WITH CONCRETE APRON	EACH	4
ELECTRICAL CONDUCTOR #6 XHHW WIRE (POWER)	LF	1210.5
ELECTRICAL CONDUCTOR #6 AWG CU WIRE (GROUND)	LF	717
TRAFFIC SIGNAL CABLE (16 CONDR) (#14 CABLE)	LF	429.5
TRAFFIC SIGNAL CABLE (#18 AWG) VIDEO CABLE	LF	429.5
ELECTRICAL CONDUCTOR #18 AWG CU WIRE (ILSNS)	LF	429.5
CONDUIT (PVC) 3"	LF	18
CONDUIT (PVC) 4"	LF	79
CONDUIT (PVC) 4" (BORED)	LF	221.5
ECONOLITE MVP SOLOPRO (VIDEO DETECTION CAMERAS)	EACH	4
FOUNDATION FOR TRAFFIC SIGNAL (TYPE 36 - A)	EACH	2
FOUNDATION FOR TRAFFIC SIGNAL (TYPE 48 - A)	EACH	2
INTERNALLY LIGHTED STREET NAME SIGNS	EACH	4
PEDESTRIAN SIGNAL SECTION (WITH COUNTDOWN LED)	EACH	8
TRAFFIC SIGNAL POLE ASM (STL) 1 ARM (36 FT)	EACH	1
TRAFFIC SIGNAL POLE ASM (STL) 1 ARM (40 FT)	EACH	1
TRAFFIC SIGNAL POLE ASM (STL) 1 ARM (50 FT)	EACH	1
TRAFFIC SIGNAL POLE ASM (STL) 1 ARM (55 FT)	EACH	1
PEDESTRIAN DETECTOR (PUSH BUTTON)	EACH	8
12 INCH LED TRAFFIC SIGNAL LAMP (RED)	EACH	13
12 INCH LED TRAFFIC SIGNAL LAMP (YELLOW)	EACH	13
12 INCH LED TRAFFIC SIGNAL LAMP (GREEN)	EACH	13
12 INCH LED TRAFFIC SIGNAL LAMP (GREEN & YELLOW ARROW COMBINED)	EACH	4
OPTICOM	EACH	4

STATE OF TEXAS
DAVID E. MEYERS
81512
REGISTERED PROFESSIONAL ENGINEER
1/5/04

DATE	DESCRIPTION	REF NO.
1/05/04	ISSUED FOR CONSTRUCTION	
11/07/03	ISSUED FOR BID	

SIGNALIZATION PLAN

SPECTRUM DRIVE EXTENSION

TOWN OF ADDISON, TEXAS

Huitt - Zollars, Inc.
3131 Mckinney Ave., Suite 600, Dallas, TX 75204
Phone (214) 871-3311/Fax (214) 871-0757

DESIGN	DRAWN	APPR.	SCALE	DATE	PROJECT NO.	NO.
HZI	HZI	DEM	NONE	NOV 2003	01-3220-01	62

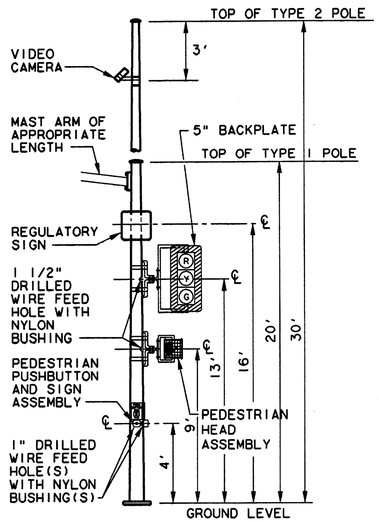

MAST ARM POLE
(TYPE 1 AND 2)

DETAILS FOR MOUNTING SIGNAL AND SIGN HARDWARE ON POLES

GENERAL NOTES

1. ALL WIRE FEED HOLES SHALL BE DRILLED IN THE FIELD BY THE CONTRACTOR. THE USE OF A BLOW TORCH FOR MAKING HOLES WILL NOT BE ALLOWED. COLD, GALVANIZING COMPOUND SHALL BE APPLIED TO THE PERIMETER OF ALL DRILLED HOLES, ALLOWING ADEQUATE DRYING TIME BEFORE MOUNTING ANY SIGNAL OR SIGN HARDWARE.
2. 1 1/2" DIAMETER HOLES SHALL BE DRILLED ON THE BOTTOM FACE OF NEW GALVANIZED MAST ARMS WHEN MOUNTING HORIZONTAL SIGNAL HEADS. (WHEN MOUNTING VERTICAL SIGNAL HEADS ON THE MAST ARM, THE HOLES SHALL BE DRILLED ON THE FRONT FACE OF THE ARM.)
3. SIGNAL & SIGN HARDWARE SHALL BE MOUNTED AT THE DISTANCES AND LOCATIONS SHOWN ON THE DIAGRAMS ABOVE UNLESS OTHERWISE INSTRUCTED BY DOT FIELD REPRESENTATIVE.
4. IF THE VEHICLE SIGNAL HEAD IS SKEWED WITH RESPECT TO THE MAST ARM, THE CONTRACTOR MAYBE REQUIRED TO PROVIDE EXTENDED (12") "ASTRO-BRACKET" ARMS SO THAT THE BACKPLATE CLEARS THE MAST ARM.
5. IF THE DISTANCE BETWEEN THE SIDE MOUNT VEHICLE SIGNAL HEAD AND THE MAST ARM POLE IS NOT SUFFICIENT TO INSTALL A BACK PLATE THE CONTRACTOR MAY BE REQUIRED TO PROVIDE EXTENDED (12") "ASTRO-BRACKET" ARMS.
6. PEDESTRIAN SIGNAL HEAD ASSEMBLIES SHALL BE INSTALLED USING CLAMSHELL MOUNT PEDESTRIAN SIGNAL MOUNTING HARDWARE.
7. NYLON BUSHINGS SHALL BE INSTALLED IN ALL WIRE FEED HOLES TO PROTECT THE WIRE INSULATION.
8. POLE MOUNTED SIGNAL HEADS SHALL BE INSTALLED ON THE AWAY-FROM-TRAFFIC SIDE OF THE SIGNAL POLE.
9. ALL SIGNAL HEAD LENSES SHALL BE 12" IN DIAMETER AND POLYCARBONATE, UNLESS OTHERWISE STATED.
10. ALL TRAFFIC SIGNAL AND PEDESTRIAN SIGNAL HEADS SHALL BE BLACK.
11. ALL SIGNAL HEADS WILL HAVE LED LAMP ASSEMBLIES & ALL TURN ARROWS SHALL BE BI-MODAL TYPE.
12. THE ADDISON - MITCHELL MOUNT & STANDARD SHALL BE UTILIZED IN THE INSTALLATION OF THE VIDEO DETECTION CAMERAS.

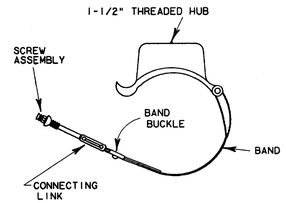

ASTRO MINI-BRAC

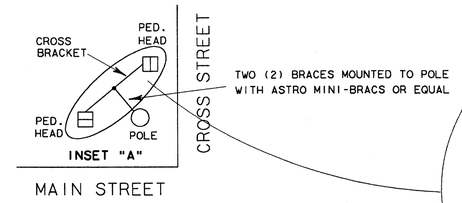

PEDESTRIAN SIGNAL HEAD MOUNTED

FOR TWO PEDESTRIAN SIGNAL HEADS

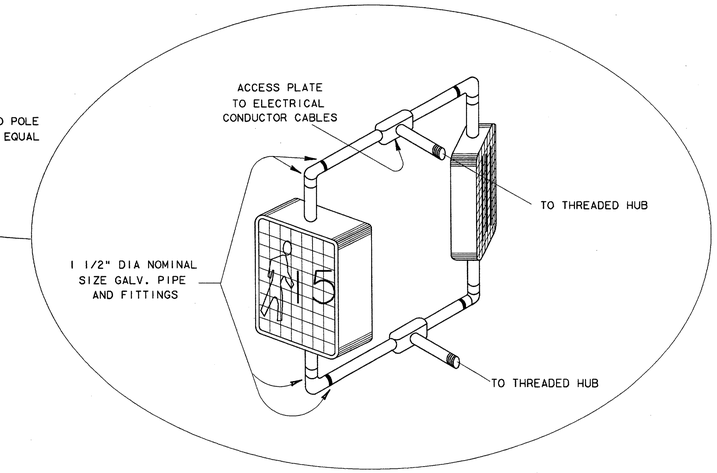

INSET "A"

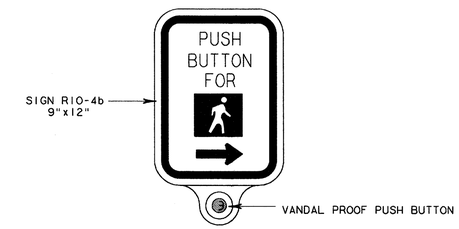

PEDESTRIAN PUSH BUTTON

WITH INTEGRAL SIGN

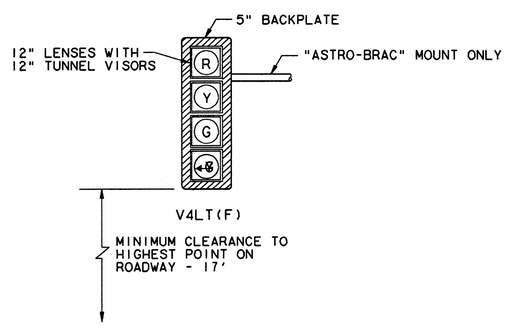

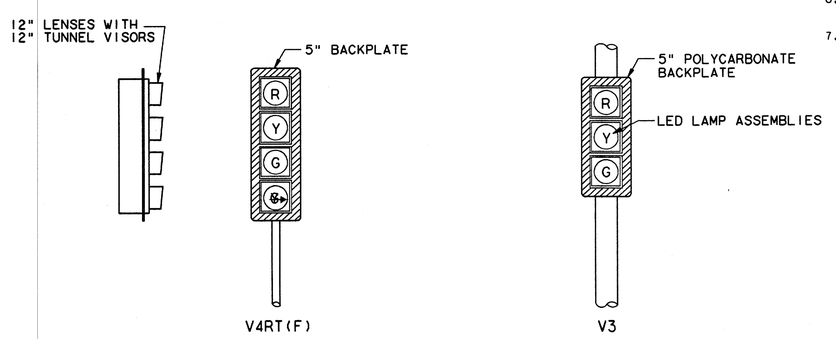

TYPICAL SIGNAL PEDESTAL
TOP MOUNT -4- LENS HEAD

NOTES:

1. THE PEDESTRIAN SIGNAL ASSEMBLIES SHALL BE COUNT DOWN LED.
2. FOR THIS PROJECT THE PEDESTRIAN SIGNAL HEAD AND PUSH BUTTON WILL BE MOUNTED ON THE SIGNAL POLE AS SHOWN ON THE "DETAIL OF SIGNAL POLE & MAST ARM".
3. ALL PEDESTRIAN SIGNAL HEADS SHALL BE INSTALLED ON THE AWAY-FROM-TRAFFIC SIDE OF THE PEDESTRIAN OR SIGNAL POLE.
4. ALL WIRING FOR PEDESTRIAN SIGNALS SHALL BE TOTALLY ENCLOSED WITHIN THE SIGNAL MOUNTING HARDWARE.
5. ALL PEDESTRIAN SIGNAL HEADS AND PUSH BUTTON SIGNALS SHALL DISPLAY THE SYMBOLIZED MESSAGE SHOWN ABOVE. (ADA APPROVED)
6. SYMBOLIZED MESSAGE HEIGHT SHALL BE 10 INCHES MINIMUM ON PEDESTRIAN SIGNAL HEADS.
7. V4 TURN SIGNALS SHALL HAVE LED BI-MODAL ARROWS.

STATE OF TEXAS
DAVID E. MEYERS
81512
REGISTERED PROFESSIONAL ENGINEER
1/5/04

DATE	DESCRIPTION	REF NO.
1/05/04	ISSUED FOR CONSTRUCTION	
11/07/03	ISSUED FOR BID	

TRAFFIC SIGNAL POLES, ARMS, & HEADS
DETAILS AND ELEVATIONS

SPECTRUM DRIVE EXTENSION

TOWN OF ADDISON, TEXAS

Huitt - Zollars, Inc.
3131 Mckinney Ave., Suite 600, Dallas, TX 75204
Phone (214) 871-3311/Fax (214) 871-0757

DESIGN	DRAWN	APPR.	SCALE	DATE	PROJECT NO.	NO.
HZI	HZI	DEM	NTS	NOV 2003	01-3220-01	63

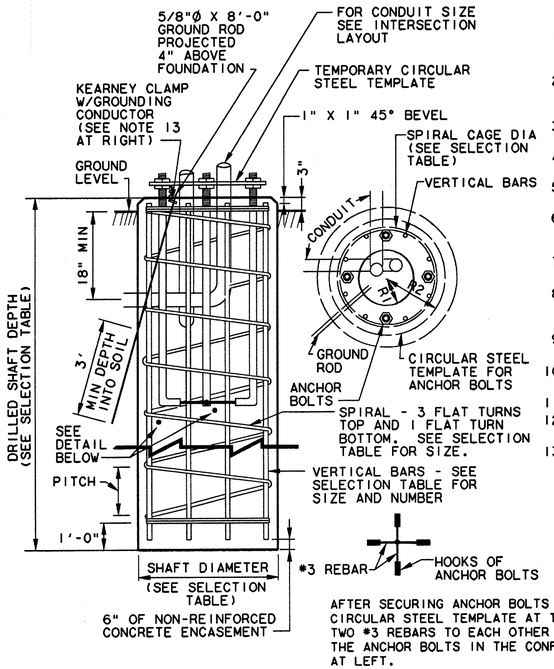

AFTER SECURING ANCHOR BOLTS TO THE TEMPORARY CIRCULAR STEEL TEMPLATE AT THE TOP, TACK WELD TWO #3 REBARS TO EACH OTHER AND THE HOOKS OF THE ANCHOR BOLTS IN THE CONFIGURATION SHOWN AT LEFT.

NOTES:

1. A 1/4" THICK STEEL PLATE TEMPLATE WITH HOLES 1/16" GREATER THAN THE ANCHOR BOLT DIAMETER SHALL BE USED TO ACCURATELY POSITION ANCHOR BOLTS.
2. CONCRETE USED FOR FOUNDATIONS SHALL BE EITHER CLASS A OR CLASS C AS DEFINED IN THE NORTH CENTRAL TEXAS COUNCIL OF GOVERNMENTS' "STANDARD SPECIFICATIONS FOR PUBLIC WORKS CONSTRUCTION" ITEM 7.4.5
3. ALL ANCHOR BOLT HOOKS SHALL BE POINTED TOWARDS THE CENTER OF THE FOUNDATION.
4. ALL CONDUITS PLACED IN THE FOUNDATION SHALL BE ORIENTED AS INDICATED ON THE INTERSECTION CONDUIT LAYOUT.
5. 7" OF THE THREADED PORTION OF EACH ANCHOR BOLT SHALL PROJECT ABOVE THE TOP SURFACE OF THE FOUNDATION.
6. A 5/8"Ø X 8'-0" COPPER CLAD STEEL GROUND ROD SHALL BE PLACED IN THE FOUNDATION WITH A MINIMUM OF 4" OF THE ROD PROJECTING ABOVE THE FOUNDATION'S TOP SURFACE.
7. EACH GROUND ROD SHALL BE DRIVEN INTO THE SOIL FOR A MINIMUM OF 3' AS INDICATED ON THE DRAWING AT THE LEFT.
8. WHEN SOLID ROCK IS ENCOUNTERED DURING DRILLING, THE DRILLED SHAFT SHALL EXTEND 5'-0" INTO SOLID ROCK, OR TO A DEPTH DETERMINED BY THE INSPECTOR.
9. THE CONFIGURATION FOR ANCHOR BOLTS AND VERTICAL BARS INSIDE THE SPIRAL CAGE SHALL BE AS INDICATED ON DRAWING AT THE LEFT.
10. SEE SELECTION TABLE FOR APPROPRIATE DRILLED SHAFT DEPTH FOR A GIVEN TYPE OF POLE AND ARM.
11. ALL STEEL REINFORCEMENT BARS SHALL BE OF INTERMEDIATE GRADE.
12. A 2' DEEP CIRCULAR FORM SHALL BE PLACED TO ENCASE THE TOP PORTION OF ALL CIRCULAR FOUNDATIONS.
13. CONNECT #6 AWG STRANDED UNINSULATED COPPER GROUNDING CONDUCTOR TO GROUND ROD WITH A KEARNEY CLAMP. FOR FURTHER DETAILS CONCERNING GROUNDING CONSULT "DETAILS FOR GROUNDING CABINETS AND POLES" DRAWING.

FOUNDATION SELECTION TABLE

TYPE OF POLE AND MAST ARM	FOUNDATION TYPE	DRILLED SHAFT DIAMETER	SPIRAL CAGE DIAMETER	REINFORCEMENT STEEL		DRILLED SHAFT DEPTH	ANCHOR BOLT - QUANTITY AND DIMENSION	ANCHOR BOLT CIRCLE DIAMETER	TEMPLATE	
				VERT BARS	SPIRAL & PITCH				INSIDE RADIUS R1	OUTSIDE RADIUS R2 (MIN.)
TYPE I UP TO 48' ARM	36-A	36"	25"	10-#9'S	#3 AT 6"	13'-0"	(2) - 1 3/4"	19"	7 3/4"	11 1/4"
TYPE I UP TO 65' ARM	48-A	48"	25"	20-#9'S	#4 AT 6"	22'-0"	(2) - 2 1/2"	27"	11"	16"

NOTES:

1. DRILLED SHAFT DIAMETER AND DEPTH, AND NUMBER OF VERTICAL BARS BASED ON TXDOT DISTRICT 18 STANDARDS FOR 80 MPH WINDS.
2. SINGLE MAST ARM.

POLE FOUNDATION DETAILS FOR TRAFFIC SIGNAL STRUCTURES

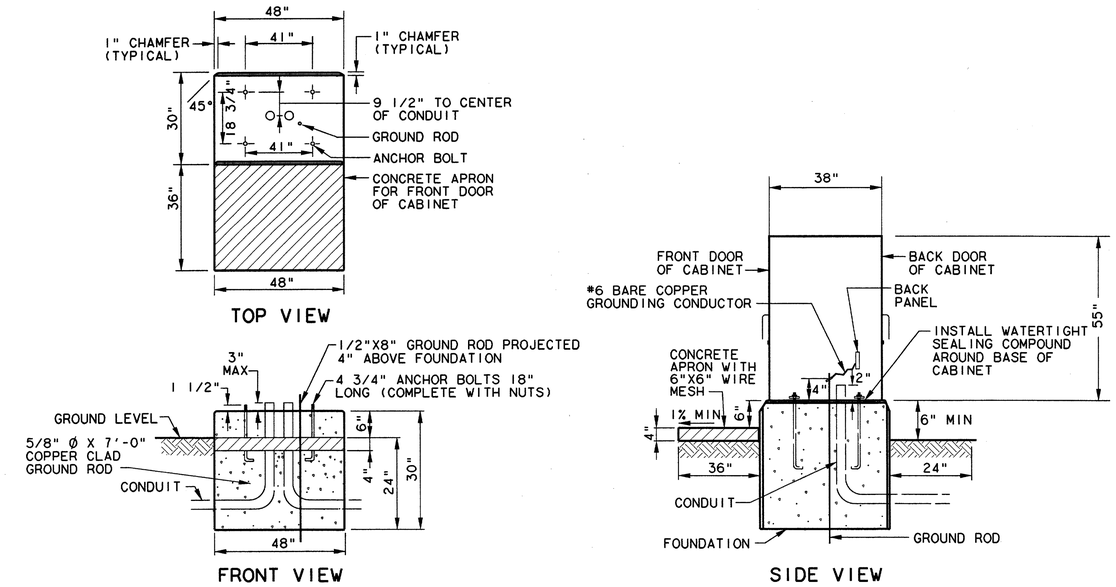

DETAILS FOR INSTALLING CONTROLLER CABINET AND FOUNDATION

GENERAL NOTES

1. ALL CONTROLLER CABINETS AND SIGNAL POLES MOUNTED ON NEW FOUNDATIONS MUST BE GROUNDED.
2. SIZE OF COPPER CLAD STEEL GROUND ROD SHALL BE 5/8"Ø X 8'-0".
3. WHEN INSTALLING A GROUND ROD IN AN EXISTING FOUNDATION, DRILL 1" HOLE THROUGH THE FOUNDATION MISSING ALL ANCHOR BOLTS AND CONDUITS. AND PACK THE DRILLED HOLE WITH SALT.
4. GROUND ROD SHALL CLEAR ALL ANCHOR BOLTS AND CONDUITS IN THE FOUNDATION. GROUND RODS SHALL EXTEND 4" ABOVE THE TOP OF FOUNDATION.

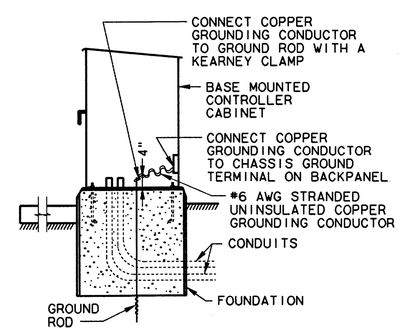

GROUND CABINETS DETAIL

(4) ANCHOR BOLTS WITH (2) HEX NUTS AND (2) WASHERS PER BOLT WITH THREADED END GALVANIZED AT LEAST 12".

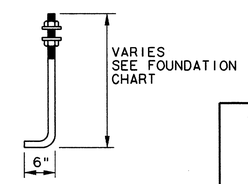

ANCHOR BOLT

NO SCALE

STATE OF TEXAS
DAVID E. MEYERS
81512
REGISTERED PROFESSIONAL ENGINEER
1/5/04

DATE	DESCRIPTION	REF NO.
1/05/04	ISSUED FOR CONSTRUCTION	
11/07/03	ISSUED FOR BID	

TRAFFIC SIGNAL CONTROLLER CABINET, AND SIGNAL FOUNDATION DETAILS

SPECTRUM DRIVE EXTENSION

TOWN OF ADDISON, TEXAS

Huitt - Zollars, Inc.
3131 Mckinney Ave., Suite 600, Dallas, TX 75204
Phone (214) 871-3311/Fax (214) 871-0757

DESIGN	DRAWN	APPR.	SCALE	DATE	PROJECT NO.	NO.
HZI	HZI	DEM	NTS	NOV 2003	01-3220-01	64

h:\proj\01322001\dgn\322001TSD2.DGN

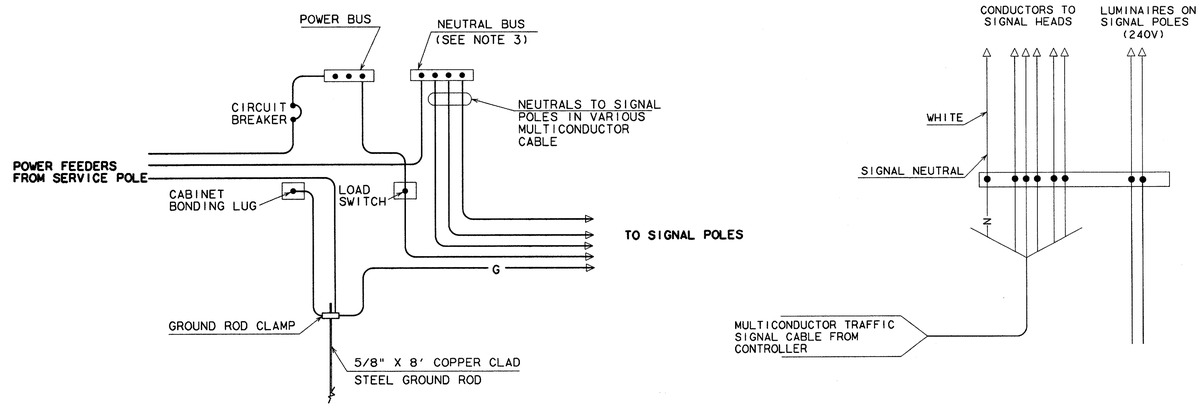

CONNECTIONS AT SIGNAL CONTROLLERS

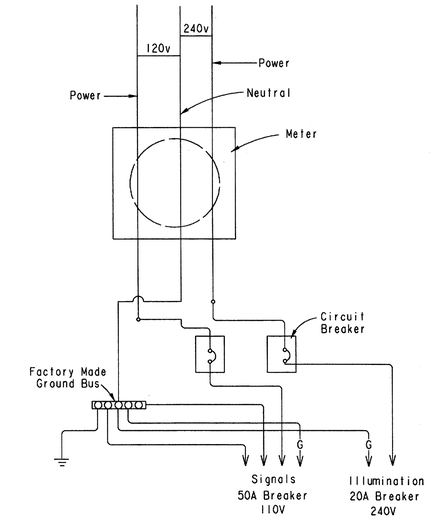

SERVICE ASSEMBLY SCHEMATIC

120/240 VOLTS - THREE WIRE

TYPE D

NOTES:

1. Luminaire conductors should not be looped through controller cabinet.
2. Electrical system to include an equipment grounding conductor noted here as "G".

   arrestors and surge protectors are to be bonded to grounding conductor.
3. Bond neutral bus to cabinet bonding lug when required elsewhere on the plans or when required by the Town of Addison.
4. Internally lighted street name signs (ILSN), when required, shall be in accordance with the item "Internally Lighted Street Name Signs" and shall comply with the City of Addison standard.

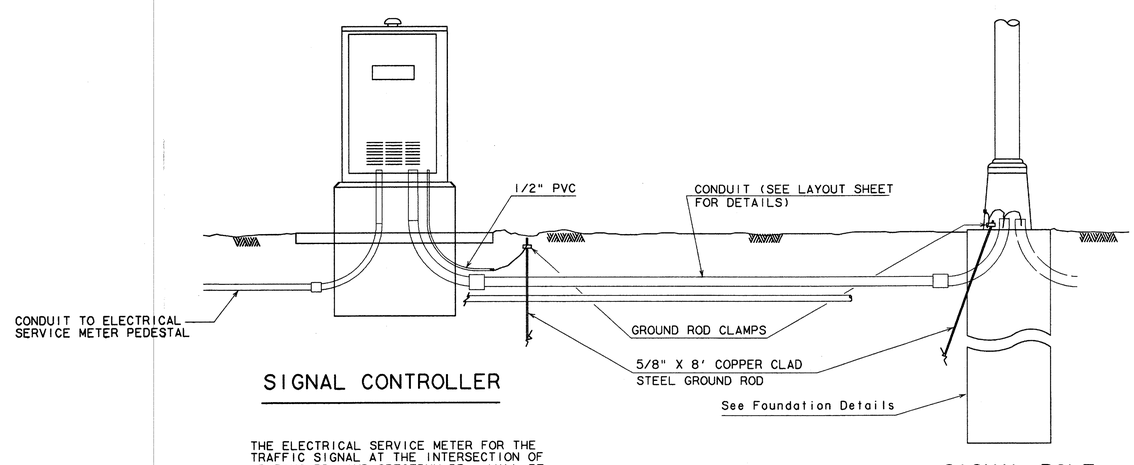

SIGNAL CONTROLLER

THE ELECTRICAL SERVICE METER FOR THE TRAFFIC SIGNAL AT THE INTERSECTION OF ARAPAHO RD. AND SPECTRUM DR. WILL BE LOCATED ON A METER PEDESTAL AS SHOWN ON SHEETS 54 & 54A.

SIGNAL POLE

STATE OF TEXAS
DAVID E. MEYERS
81512
REGISTERED PROFESSIONAL ENGINEER
1/5/04

DATE	DESCRIPTION	REF NO.
1/05/04	ISSUED FOR CONSTRUCTION	
11/07/03	ISSUED FOR BID	

TRAFFIC SIGNAL CABINET POWER, GROUNDING AND LRT SIGNAL MOUNTING

SPECTRUM DRIVE EXTENSION

TOWN OF ADDISON, TEXAS

Huitt - Zollars, Inc.
3131 Mckinney Ave., Suite 600, Dallas, TX 75204
Phone (214) 871-3311/Fax (214) 871-0757

DESIGN	DRAWN	APPR.	SCALE	DATE	PROJECT NO.	NO.
HZI	HZI	DEM	NTS	NOV 2003	01-3220-01	65

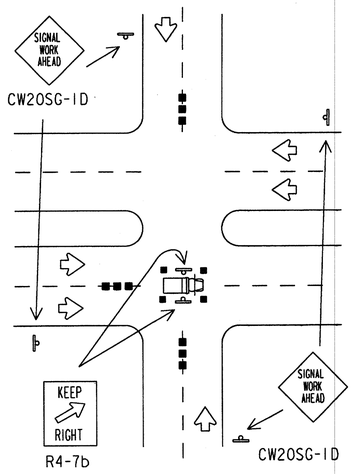

TYPICAL HANGING SIGNAL INSTALLATIONS

Advance warning channelizing devices are optional.

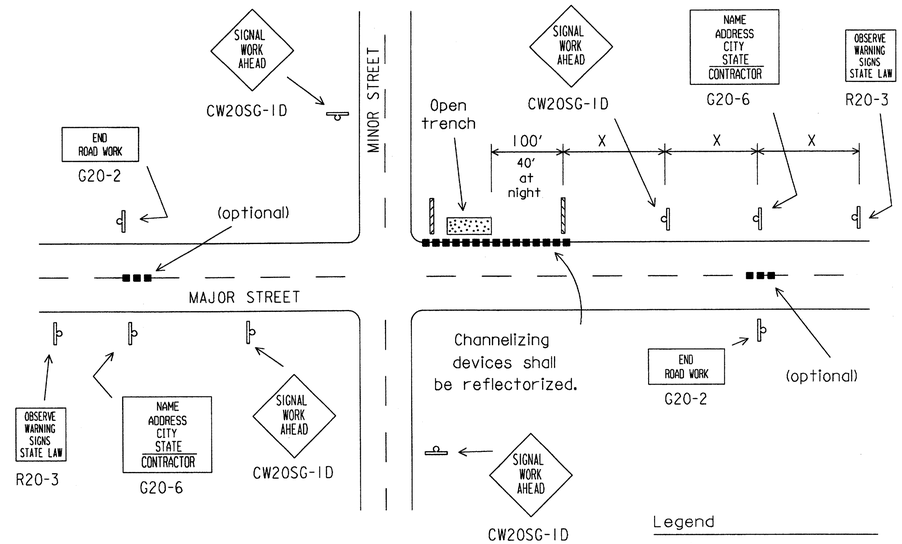

TYPICAL ADVANCE SIGNING

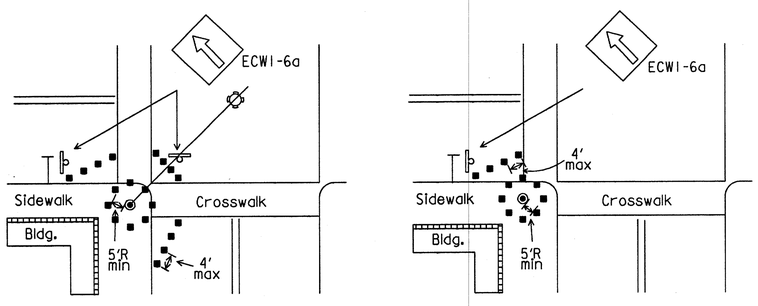

Channelizing devices should not be placed closer than 5 foot radius (minimum) to signal poles.
Parking may be eliminated by placing channelizing devices in spaces.
If pedestrian walkways are blocked, refer to TMUTCD.

TYPICAL RESTRICTED PEDESTRIAN MOVEMENTS

Typical channelizing device is the 28" cone. Plastic drums may be used if approved by the Engineer. Metal drums shall NOT be used as a channelizing device or sign support.

For several closely adjoining projects, advance signing may not be required in advance of each intersection, but only in advance of the intersections at the project limits. See details elsewhere in the plans for advance signing requirements.

Advance signs and barricades shall be in place when signal construction operations are in progress. The contractor may remove advance signs and barricades when no construction operations are underway if permitted elsewhere in the plans. Obstructions or hazards at the work area shall be clearly marked and delineated at all times.

All holes, trenches or other hazardous areas shall be adequately protected by barricades, lights or other protective devices. Trenches shall be covered or surrounded with orange plastic construction fence as directed by the Engineer.

Flagger and FCW20-7a sign may be required according to field conditions. Vehicles parked in roadway shall be equipped with two strobes. High level flags at corners of vehicle may also be used. Work operations that require work vehicle in traveled way 20 minutes or less may use cones, high level flags and strobes as advance warning devices. Cones should only be placed around vehicle. Flaggers may be used on high speed rural intersections.

STATE OF TEXAS
DAVID E. MEYERS
81512
REGISTERED PROFESSIONAL ENGINEER
1/5/04

DATE	DESCRIPTION	REF NO.
1/05/04	ISSUED FOR CONSTRUCTION	
11/07/03	ISSUED FOR BID	

TRAFFIC SIGNAL INSTALLATION
TYPICAL DETAILS

SPECTRUM DRIVE EXTENSION

TOWN OF ADDISON, TEXAS

Huitt - Zollars, Inc.
3131 McKinney Ave., Suite 600, Dallas, TX 75204
Phone (214) 871-3311/Fax (214) 871-0757

DESIGN	DRAWN	APPR.	SCALE	DATE	PROJECT NO.	NO.
HZI	HZI	DEM	NTS	NOV 2003	01-3220-01	66

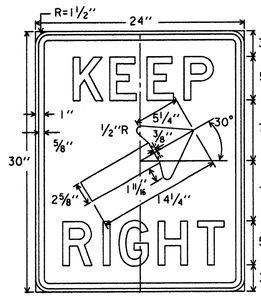

R4-7b
24" X 30"

Letters - Black
Symbol - Black
Border - Black
Background - White Refl.

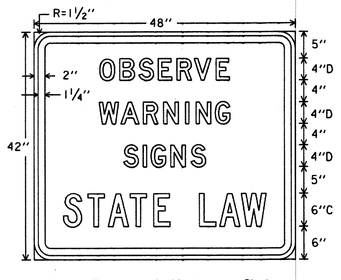

R20-3
48" X 42"

Letters - Black
Border - Black
Background - White Refl.

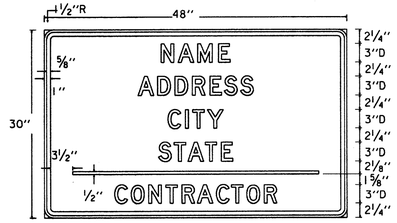

G20-6
48" X 30"

Letters - Black
Border - Black
Background - Orange or White Refl.

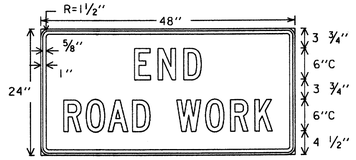

G20-2a
48" X 24"

Letters - Black
Border - Black
Background - Orange Refl.

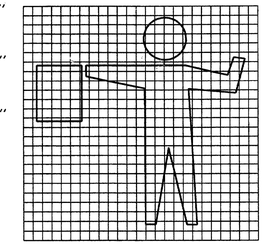

LEFT 5"D
R4-8b

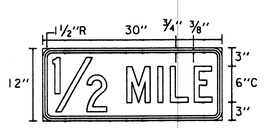

Distance Plaque
30" X 12"

Alternate legends

1 MILE 6"C
1500 FT 6"C
1000 FT 6"C
500 FT 6"C

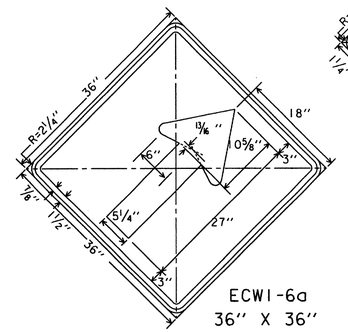

ECW1-6a
36" X 36"

Legend - Black
Border - Black
Background - Orange Refl.

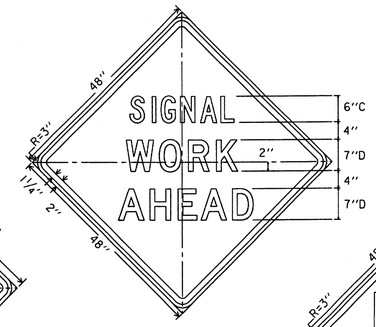

CW20SG-1D
48" X 48"

Letters - Black
Border - Black
Background - Orange Refl.

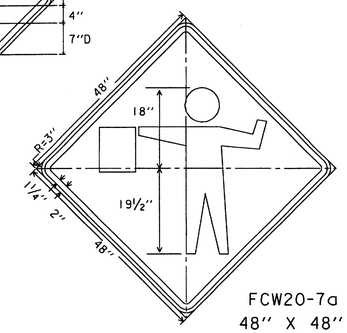

FCW20-7a
48" X 48"

Legend - Black
Border - Black
Background - Orange Refl.

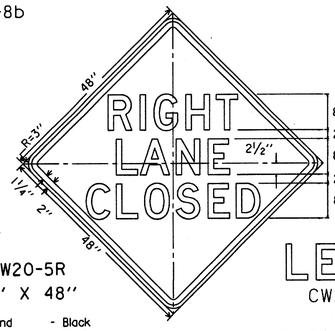

CW20-5R
48" X 48"

Legend - Black
Border - Black
Background - Orange Refl.

LEFT 8"D
CW20-5L

TYPICAL SIGNS USED IN TRAFFIC SIGNAL CONSTRUCTION AREAS

TYPE I BARRICADES

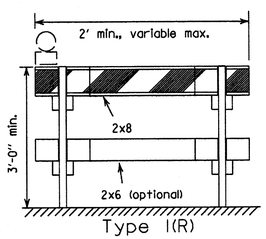

Type I(R)

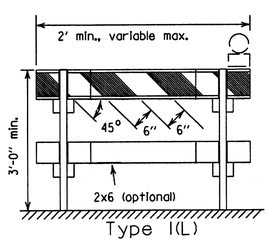

Type I(L)

For Type I and II Barricades, both sides of the rails shall have reflective orange and reflective white striping.

TYPICAL SIGN SUPPORTS

FIXED SUPPORTS

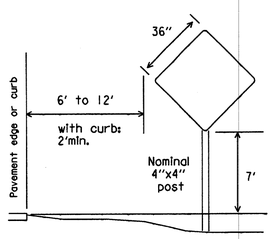

WOOD POST SIGN SUPPORT: for 36" x 36" and smaller warning signs, and other signs having an area not exceeding 10 sq.ft.

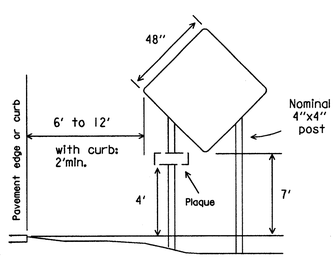

WOOD POST SIGN SUPPORT: for 48" x 48" warning sign.

Signs erected on fixed supports shall be at a minimum height of 7 feet.

Embedment depth for wood sign supports and post type barricades should be 3 feet minimum, unless specified elsewhere in the plans.

Driveable sign supports may be used and shall be installed in accordance with the manufacturers recommendations.

PORTABLE SUPPORTS

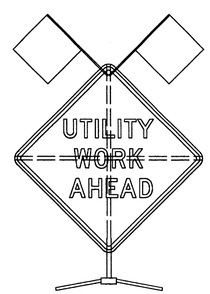

GENERAL

All sign usage and erection shall be in strict accordance with the "Texas Manual on Uniform Traffic Control Devices for Streets and Highways" (TMUTCD). The Contractor shall maintain each sign as directed by the Engineer.

The Contractor may use either the sign designs shown in the "Standard Highway Sign Designs for Texas " (SHSD). All work zone signs provided for in the TMUTCD but not detailed in the plans may be used when directed by the Engineer.

WARNING LIGHTS

When required by the Engineer the Contractor shall furnish a copy of the warning light certification. The certification will be by the manufacturer, stating the lights meet the requirements of the latest ITE Purchase Specification for Flashing and Steady-Burn Warning Lights.

REFLECTIVE SHEETING

Type A, B or C sheeting may be used for all, day only, applications. Type A sheeting should be used for all, white background, regulatory signs. Type C sheeting shall be used for all other applications.

The above applications of sheeting grades to different type signs will apply unless otherwise specified in the plans.

TYPE A = Engineer Grade
TYPE B = Super Engineer Grade
TYPE C = High Specific Intensity

SUPPORTS AND MOUNTING HEIGHT

Regardless of the type of support used, or duration of work, regulatory signs should not be erected at heights less than 7 feet above the pavement surface.

Wood sign post supports shall be painted white.

Signs may be erected on portable or fixed supports for use on construction projects to warn or guide traffic through and/or around the actual construction area.

PORTABLE - Signs erected on portable supports for use on construction projects normally mean signs which are used during the daytime to warn or guide traffic through and/or around the actual construction area, but at the end of the workday such signs are removed.

Portable supports shall be as shown on this sheet. Signs with portable supports may be used for short term, short duration and mobile operations. The bottom of the sign shall be a minimum of one (1) foot above the pavement surface.

FIXED - Signs erected on fixed supports for use on construction projects normally mean signs that are to remain in place for both daytime and nighttime usage to regulate, warn and guide traffic in advance of and within the limits of the project including the crossroad approaches. Signs erected on fixed supports should be at a minimum height of seven (7) feet.

SIGN SUPPORT WEIGHTS

Where sign supports require the use of weights to keep from turning over, the use of some type of sandbag is recommended. The use of pieces of rock, concrete, iron, steel or other solid objects will not be permitted. Sandbags shall only be placed along or upon the base supports of the device and shall not be suspended above ground level or hung with rope, wire, chains or other fasteners.

REMOVING OR COVERING

When sign messages may be confusing or no longer apply, the signs and supports shall be removed from roadway and shoulder, or the signs shall be completely covered. Turning signs from motorists view will not be allowed. When signs are covered the material used shall be opaque, such as heavy mil black plastic. Burlap shall not be used to cover signs. Signs shall be removed upon completion of the work.

Duct tape or other adhesive material shall not be affixed to sign face.

STATE OF TEXAS
DAVID E. MEYERS
81512
REGISTERED PROFESSIONAL ENGINEER
1/5/04

DATE	DESCRIPTION	REF NO.
1/05/04	ISSUED FOR CONSTRUCTION	
11/07/03	ISSUED FOR BID	

TRAFFIC SIGNAL INSTALLATION
BARRICADES AND SIGNS

SPECTRUM DRIVE EXTENSION

TOWN OF ADDISON, TEXAS

Huitt - Zollars, Inc.
3131 Mckinney Ave., Suite 600, Dallas, TX 75204
Phone (214) 871-3311/Fax (214) 871-0757

DESIGN	DRAWN	APPR.	SCALE	DATE	PROJECT NO.	NO.
HZI	HZI	DEM	NTS	NOV 2003	01-3220-01	67

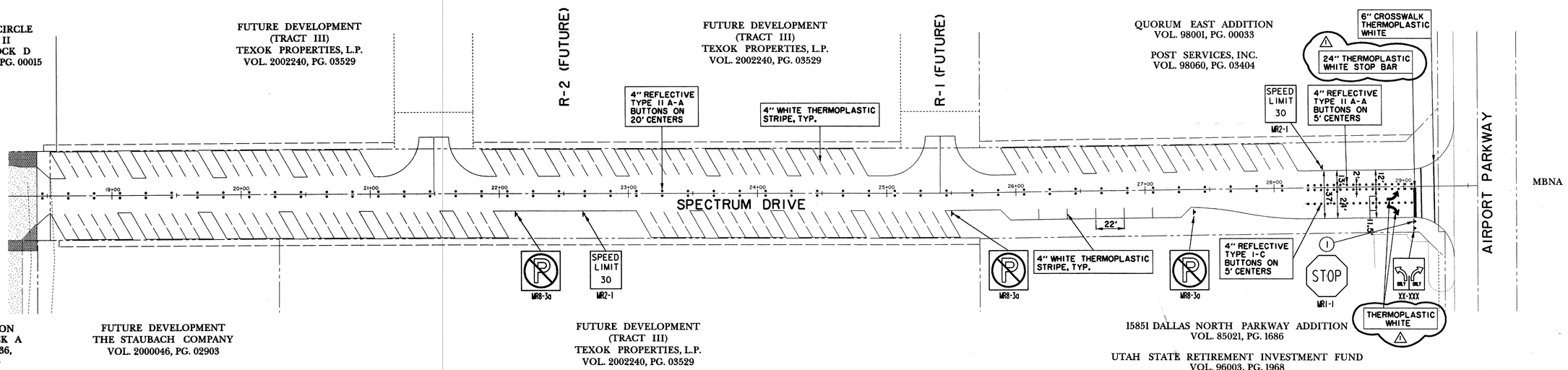

STREET NAME SIGNS		
SIGN NO./ LOCATION	STREET NAME	MOUNTING
1	AIRPORT PARKWAY	NEW SIGN POLE
	SPECTRUM DRIVE	

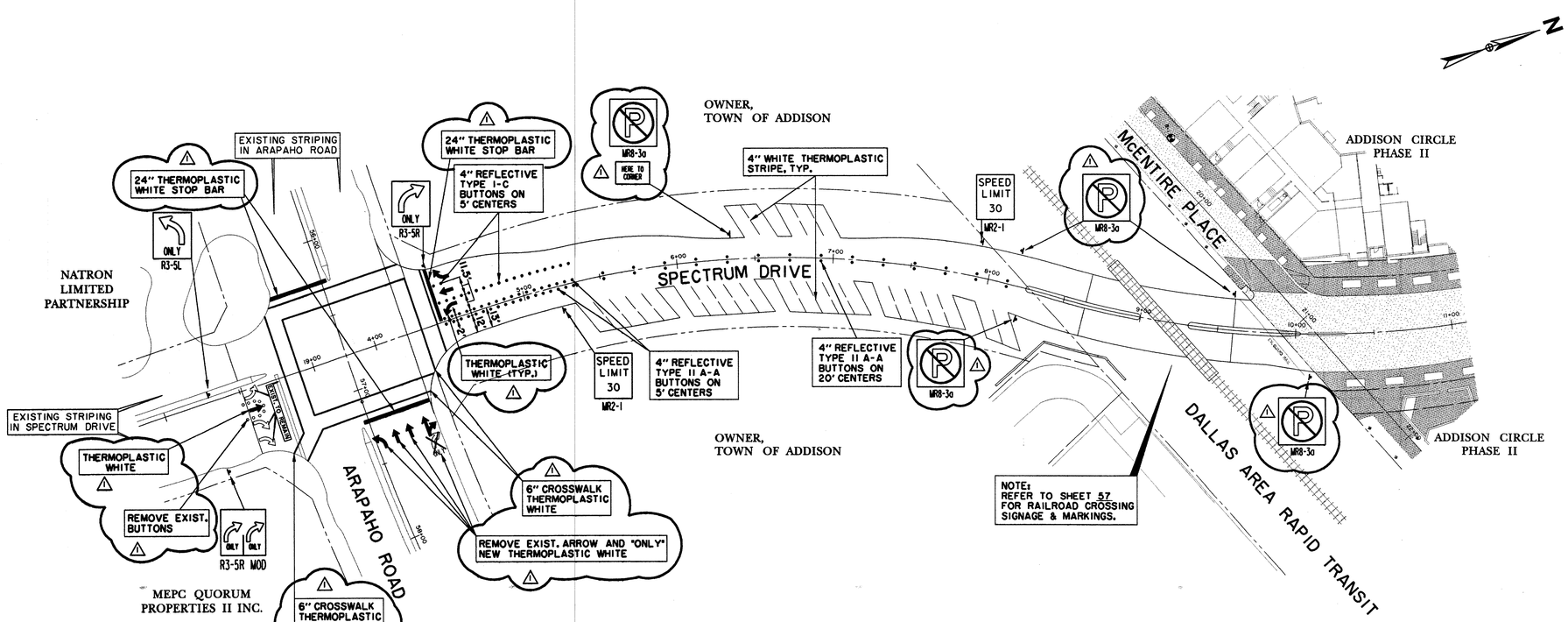

BENCHMARKS:

'□ " CUT SOUTHWEST CORNER OF CURB INLET, WEST SIDE OF SPECTRUM DRIVE, ±30' NORTH OF MORRIS AVENUE.
ELEV. 611.84

'□ " CUT ON TOP EAST END OF CURB INLET ON NORTH SIDE OF MORRIS AVENUE AND ±150' EAST OF QUORUM DRIVE CENTERLINE.
ELEV. 616.39

"X" CUT ON CONC. TOP OF CURB OF MEDIAN NOSE ON SPECTRUM DRIVE AT INTERSECTION OF McENTIRE PLACE.
ELEV. 619.30

STATE OF TEXAS
DAVID E. MEYERS
81512
REGISTERED PROFESSIONAL ENGINEER
11/5/04

DATE	DESCRIPTION	REF NO.
1/05/04	ISSUED FOR CONSTRUCTION	
11/20/03	ADDENDUM NO. 1	1
11/07/03	ISSUED FOR BID	

SIGNAGE & STRIPING PLAN

SPECTRUM DRIVE EXTENSION

TOWN OF ADDISON, TEXAS

Huitt - Zollars, Inc.
3131 Mckinney Ave., Suite 600, Dallas, TX 75204
Phone (214) 871-3311/Fax (214) 871-0757

DESIGN	DRAWN	APPR.	SCALE	DATE	PROJECT NO.	NO.
HZI	HZI	DEM	1"=40'	NOV 2003	01-3220-01	68

hz \proj\01322001\dgn\322001SM01.DGN

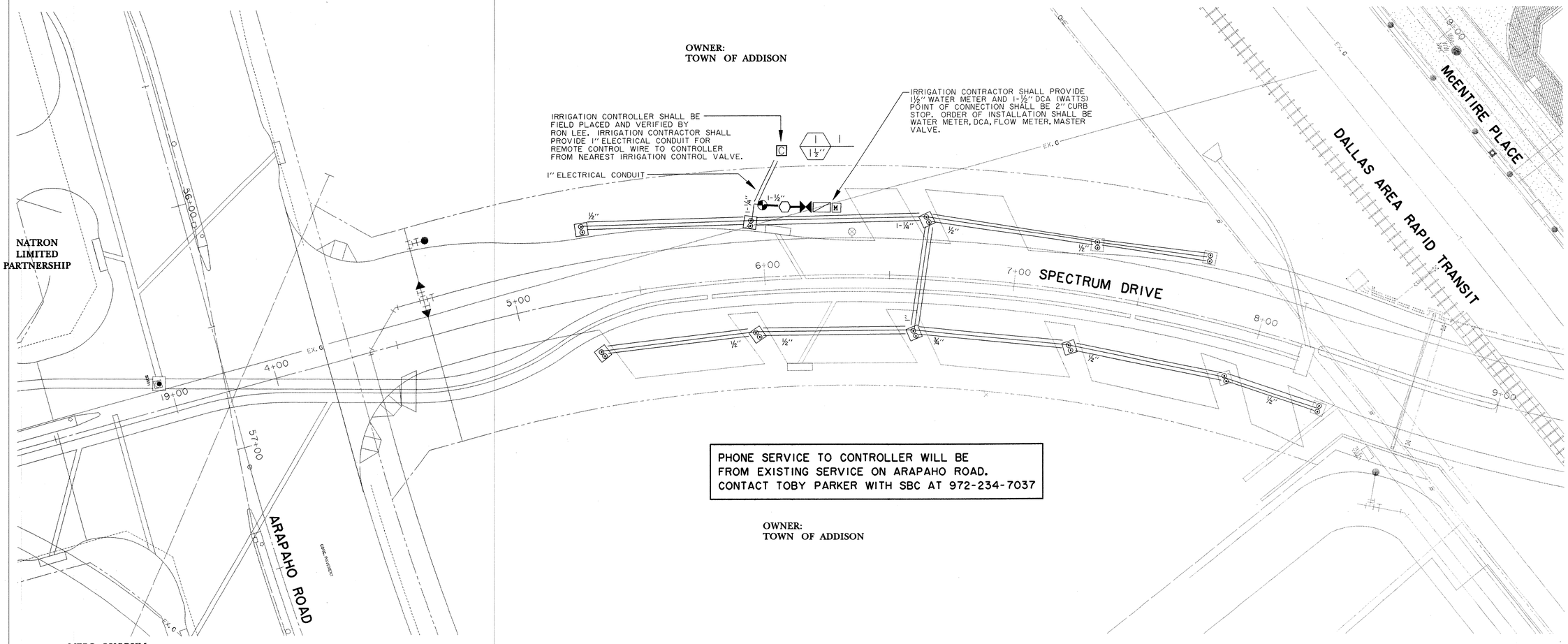

BENCHMARKS:

"□" CUT SOUTHWEST CORNER OF CURB INLET, WEST SIDE OF SPECTRUM DRIVE, ±30' NORTH OF MORRIS AVENUE.
ELEV. 611.84

"X" CUT ON CONC. TOP OF CURB OF MEDIAN NOSE ON SPECTRUM DRIVE AT INTERSECTION OF McENTIRE PLACE.
ELEV. 619.30

STATE OF TEXAS
STEPHEN C. BERKENBILE
6235
LICENSED IRRIGATOR

DATE	DESCRIPTION	REF NO.
1/05/04	ISSUED FOR CONSTRUCTION	
11/07/03	ISSUED FOR BID	

IRRIGATION PLAN

SPECTRUM DRIVE EXTENSION

TOWN OF ADDISON, TEXAS

Hulitt - Zollars, Inc.
3131 Mckinney Ave., Suite 600, Dallas, TX 75204
Phone (214) 871-3311/Fax (214) 871-0757

DESIGN	DRAWN	APPR.	SCALE	DATE	PROJECT NO.	NO.
HZI	HZI	SCB	1"=20'	NOV 2003	01-3220-01	69

STEPHEN C BERKENBILE & ASSOCIATES
IRRIGATION DESIGN CONSULTANTS
2355 JOHNSON ROAD
SOUTHLAKE, TX 76092
METRO(817) 817-379-9853
FAX (817) 431-1066

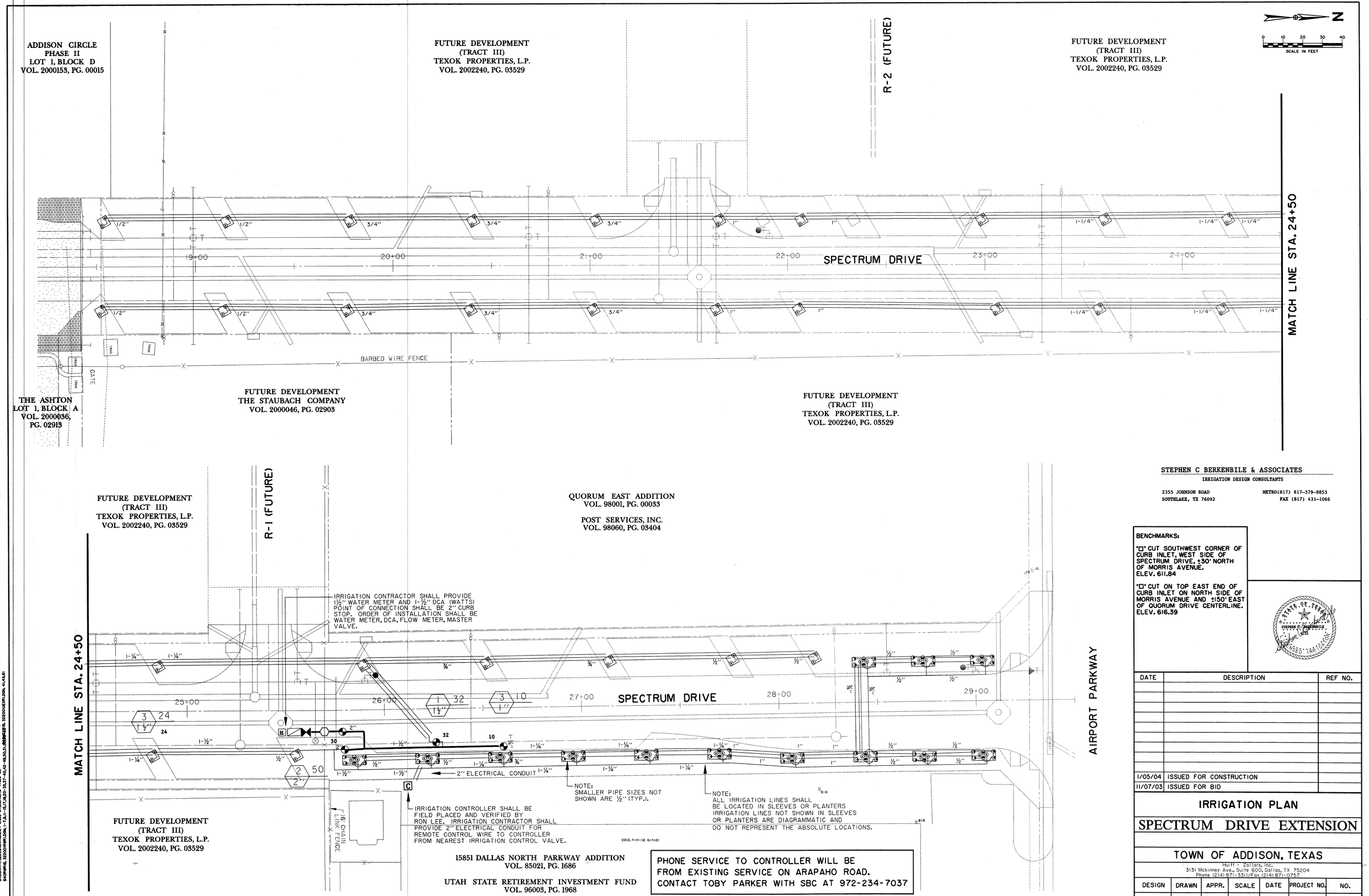

PHONE SERVICE TO CONTROLLER WILL BE FROM EXISTING SERVICE ON ARAPAHO ROAD. CONTACT TOBY PARKER WITH SBC AT 972-234-7037

STEPHEN C BERKENBILE & ASSOCIATES
IRRIGATION DESIGN CONSULTANTS
2355 JOHNSON ROAD
SOUTHLAKE, TX 76092
METRO(817) 817-379-9853
FAX (817) 431-1066

BENCHMARKS:

'□' CUT SOUTHWEST CORNER OF CURB INLET, WEST SIDE OF SPECTRUM DRIVE, ±30' NORTH OF MORRIS AVENUE.
ELEV. 611.84

'□' CUT ON TOP EAST END OF CURB INLET ON NORTH SIDE OF MORRIS AVENUE AND ±150' EAST OF QUORUM DRIVE CENTERLINE.
ELEV. 616.39

STATE OF TEXAS
STEPHEN C. BERKENBILE
No. 3233
LICENSED IRRIGATOR

DATE	DESCRIPTION	REF NO.
1/05/04	ISSUED FOR CONSTRUCTION	
11/07/03	ISSUED FOR BID	

IRRIGATION PLAN

SPECTRUM DRIVE EXTENSION

TOWN OF ADDISON, TEXAS

Hulitt - Zollars, Inc.
3131 Mckinney Ave., Suite 600, Dallas, TX 75204
Phone (214) 871-3311/Fax (214) 871-0757

DESIGN	DRAWN	APPR.	SCALE	DATE	PROJECT NO.	NO.
HZI	HZI	SCB	1"=20'	NOV 2003	01-3220-01	70

h:\proj\01322001\dgn\BERKREF2.DGN

TOWN OF ADDISON IRRIGATION SPECIFICATIONS

REVISED 01/07/03

THESE REVISED SPECIFICATIONS SUPERSEDE ANY AND ALL OTHERS. HOWEVER, ANY DISCREPANCIES BETWEEN THE APPROVED CONSTRUCTION PLANS AND THOSE OF THE TOWN MUST BE BROUGHT TO THE ATTENTION OF THE TOWN'S DESIGNATED REPRESENTATIVE FOR A FINAL DETERMINATION. THE CONTRACTOR WILL PRESENT THE TOWN'S REPRESENTATIVE AN AS-BUILT PLAN AT THE FINAL WALK-THROUGH.

1. ALL WORK IS TO BE ACCOMPLISHED BY OR DIRECTLY SUPERVISED AT ALL TIMES BY AN ON-SITE IRRIGATOR LICENSED BY THE STATE OF TEXAS.

2. THE CONTRACTOR SHALL VERIFY THE WATER PRESSURE BEFORE THE INSTALLATION BEGINS. IF THE STATIC PRESSURE IS DIFFERENT THAN THAT OF THE DESIGN PRESSURE, CONTACT THE DESIGNER AND TOWN'S REPRESENTATIVE IMMEDIATELY SO CHANGES CAN BE MADE. DESIGN HEAD TO HEAD WITH NO SINGLE HEAD COVERAGE. USE APPROPRIATE SIZE NOZZLES FOR A GIVEN LANDSCAPE AREA SO AS NOT TO SPRAY ONTO OR OVER PAVED SURFACES OR STRUCTURES. DO NOT EXCEED MANUFACTURER'S RECOMMENDATIONS.

3. THE INSTALLER IS RESPONSIBLE FOR RESETTING HEAD AND/OR BOX HEIGHT DUE TO SETTLING AND AFTER TURF, GROUNDCOVER, SHRUBS, TREES, AND MULCH IS ADDED TO THE LANDSCAPE AREAS. THE CONTRACTOR MUST SUPPLY A WORKMANSHIP WARRANTY FOR (1) YEAR FROM DATE OF ACCEPTANCE.

4. PLANS ARE DIAGRAMMATIC AND FIELD ADJUSTMENTS ARE OFTEN NECESSARY. FOR THIS REASON, PRIOR TO TRENCHING, VALVE LOCATIONS AND HEAD LAYOUT WITH FLAGS NEEDS TO BE DONE AND APPROVED BY THE TOWN'S IRRIGATION INSPECTOR. NOT DOING SO MAY RESULT IN THE RELOCATION OF HEADS AND/OR VALVES AT THE CONTRACTOR'S EXPENSE.

5. WATER TAPS: WATER TAPS WILL BE 2" IN SIZE. ALL PARTS MUST CONFORM TO THE TOWN OF ADDISON WATER DEPARTMENT SPECIFICATIONS AND ARE THE RESPONSIBILITY OF THE CONTRACTOR TO PROVIDE. INSPECTION OF TAPS BY THE WATER DEPARTMENT REPRESENTATIVE MUST OCCUR. EXCAVATION AND TAP PERMITS ARE REQUIRED. CONTACT THE TOWN OF ADDISON WATER DEPARTMENT AT (972) 450-2871.

6. WATER METERS: ONLY MASTER OR HERSEY METERS WITH TWO (2) BRASS FLANGES ARE ACCEPTABLE. METER LAY LENGTHS MUST BE IN ACCORDANCE WITH THE TOWN OF ADDISON WATER DEPARTMENT'S SPECIFICATIONS, HOUSED IN APPROPRIATE SIZE (TO BE DETERMINED BY THE TOWN'S IRRIGATION INSPECTOR) CONCRETE BOX WITH LID. NEW STAINLESS STEEL BOLTS AND NUTS MUST BE USED IN THE INSTALLATION ALONG WITH NEW NEOPRENE GASKETS. THE BOX SHOULD BE LEVEL WITH THE FINAL GRADE USING CONCRETE PAVERS TO SUPPORT AND PREVENT SINKING. BACKFILL INSIDE THE BOX, 3" BELOW METER BASE WITH AT LEAST 6" OF FINE (1/2") PEA GRAVEL. CONNECTION TO MAIN MUST BE APPROVED AND INSPECTED BY THE TOWN'S WATER DEPARTMENT INSPECTOR AND ALL TAP MATERIALS ARE TO BE PURCHASED AT THE EXPENSE OF THE CONTRACTOR AND MUST COMPLY WITH THE TOWN OF ADDISON'S SPECIFICATIONS.

7. BACKFLOW DEVICES: ONLY WATTS 007 M SERIES INLINE CHECK VALVE ASSEMBLIES WITH THE STAINLESS STEEL BALL VALVE HANDLES AND NUTS ARE TO BE USED. CONTRACTOR SHALL PROVIDE AND INSTALL BRASS PLUGS FOR THE TEST COCKS. CONNECT TO THE FLANGE USING TEFLON TAPED COPPER NIPPLE OF SUFFICIENT LENGTH TO CENTER THE DCA WITHIN ITS HOUSING. THE DEVICE WILL BE HOUSED IN AN APPROPRIATE SIZE, (TO BE DETERMINED BY THE TOWN'S IRRIGATION INSPECTOR) RECTANGULAR CONCRETE BOX WITH LID USING CONCRETE PAVERS FOR PROPER STABILITY AND HEIGHT ADJUSTMENT. THE CONTRACTOR SHALL BE RESPONSIBLE FOR THE DCA TESTING IN ACCORDANCE WITH STATE OF TEXAS LAW, USING A LICENSED BACKFLOW ASSEMBLY TESTER REGISTERED WITH THE TOWN OF ADDISON WATER DEPARTMENT.

8. SLEEVES: ALL PAVING MUST HAVE TOWN APPROVED SLEEVE SIZES AND QUANTITIES PRESENT. IT IS THE RESPONSIBILITY OF THE CONTRACTOR TO NOTIFY THE TOWN'S IRRIGATION INSPECTOR OF ANY AREA WHERE SLEEVES SHOULD BE PRESENT BUT ARE NOT AND PROVIDE SUCH MATERIALS AT HIS COST. ANY PAVING INSTALLED WITHOUT SLEEVES WILL NECESSITATE A BORE AND SUBSEQUENT MATERIALS AT THE CONTRACTOR'S EXPENSE. ALL SLEEVES 2" AND SMALLER WILL BE SCHEDULE 40 PVC WITH SIZE AND LOCATION NOTED ON THE PLAN. LARGER SIZES WILL BE CLASS 200. ALL PIPING UNDERNEATH PAVING, INCLUDING SIDEWALKS, MUST BE SLEEVED. ALL SLEEVES ARE TO BE BELLED END PVC PIPE. A MINIMUM LENGTH OF 12 INCHES OF SLEEVE MATERIAL MUST EXTEND BEYOND THE PAVEMENT.

9. GLUE AND PRIMER: USE TURFTITE OR WET-R-DRY BRAND GLUE AND A GOOD QUALITY PURPLE PRIMER ON ALL LATERAL LINES AND ALL MAIN LINES. AVOID EXCESSIVE USE AND WIPE EXCESS GLUE OFF OF ALL JOINTS AND FITTINGS WITH A CLEAN RAG.

10. PIPE: ALL MAIN LINE PIPE 2 INCHES AND SMALLER IS TO BE SCHEDULE 40 BELLED PVC; LARGER SIZES ARE TO BE CLASS 200 BELLED PVC WITH A MINIMUM DEPTH OF 14" AND A MAXIMUM DEPTH OF 16". PUT NOT MORE THAN TWO *2* PIPES IN ANY ONE TRENCH AND SEPARATE THE MAIN LINE FROM THE LATERAL LINE WITH AT LEAST TWO (2) INCH OF COVER. CLASS 200 BELLED PVC LATERAL PIPING IS TO BE USED WITH A MINIMUM DEPTH OF 12" AND A MAXIMUM DEPTH OF 14".

11. FITTINGS: NO CROSSES ARE PERMITTED. SEPARATE TEES, 45'S, ELBOWS AND OTHER FITTINGS BY AT LEAST 12 INCHES. REDUCTION TEES ARE PREFERRED OVER USE OF SINGLE REDUCER BUSHINGS. MULTIPLE REDUCER BUSHINGS WILL NOT BE ACCEPTED. ONLY SPEARS AND/OR LASCO FITTINGS ARE PERMITTED. ALLOW 18 INCHES OUTSIDE OF SLEEVE BEFORE THE FIRST FITTING. NO 45 DEGREE ELBOWS ON 1 INCH AND LARGER PIPE ARE ALLOWED.

12. VALVES:

A. MASTER VALVES: EVERY POINT OF CONNECTION TO THE WATER SUPPLY SYSTEM SHALL HAVE A WEATHERMATIC 11000 FCR SERIES VALVE AS THE MASTER VALVE, HOUSED IN A STANDARD (LARGE) AMETEK RECTANGULAR PLASTIC VALVE BOX WITH 4 TO 6 INCHES OF SMALL (1/2") PEA GRAVEL PLACED UNDERNEATH THE VALVE IN SUCH A MANNER AS TO PREVENT SOIL INFILTRATION INTO THE BOX. BLUE WIRE SHALL BE USED AS THE STATION WIRE FOR THE MASTER VALVE.

B. STATION VALVES: ONLY WEATHERMATIC 11000 FCR SERIES VALVES ARE PERMITTED. A BALL VALVE WILL BE INSTALLED BEFORE EVERY STATION OR ZONE VALVE. THEY ARE TO BE LOCATED WITHIN A STANDARD (LARGE) AMETEK RECTANGULAR PLASTIC VALVE BOXES WITH 4 TO 6 INCHES OF SMALL (1/2") PEA GRAVEL PLACED UNDERNEATH THE VALVE IN SUCH A MANNER AS TO PREVENT SOIL INFILTRATION INTO THE BOX. THE SMALL (1/2") PEA GRAVEL SHOULD BE 2 INCHES FROM THE BOTTOM OF THE VALVE BODY.

C. BALL VALVES: FEMALE THREADED PLASTIC SPEARS OR LASCO BALL VALVES WITH POSITIVE T-HANDLE CUT OFF MUST BE INSTALLED ON EVERY 200 FEET OF MAINLINE FOR ISOLATION PURPOSES. A BALL VALVE IS ALSO REQUIRED TO BE INSTALLED BEFORE EVERY STATION VALVES.

D. QUICK COUPLER VALVES: USE ONLY BUCKNER V075 SINGLE LUG QUICK COUPLING VALVES WITH A METAL TOP. THEY ARE TO BE CONNECTED TO A THREADED FITTING. TEFLON TAPE AND APPROPRIATE LENGTH OF GRAY SCHEDULE 80 NIPPLES AND SCHEDULE 40 FITTINGS ARE TO BE USED FOR THE SWING JOINT. SECURE TO 18 INCH BY 1/2 INCH STEEL REBAR WITH A STAINLESS STEEL WORM SCREW CLAMP. HOUSE QCV IN A 10 INCH ROUND PLASTIC AMETEK VALVE BOX.

E. FLOWMETERS: PURCHASE FROM A RAIN MASTER SUPPLIER AND INSTALL APPROPRIATELY SIZED FLOWMETER. FOLLOW ALL INSTALLATION INSTRUCTIONS AS APPROVED BY RAIN MASTER. THE CONTRACTOR MUST ALSO PURCHASE FROM RAIN MASTER AND INSTALL SHIELDED RAIN MASTER EV-CAB-SEN FLOW METER CABLE AND INSTALL WITHIN CONTINUOUS 3/4" OR LARGER GRAY PVC CONDUIT WITH 6 INCH OR LARGER J-BOXES PLACED EVERY 200 FEET OR WHERE 360 DEGREES OF FITTINGS ARE INSTALLED; ONLY SWEEP FITTINGS ARE PERMITTED. ONLY A CONTINUOUS RUN OF CABLE IS ALLOWED; NO SPLICES WILL BE ALLOWED EXCEPT AT THE POINT OF CONNECTION TO THE FLOW METER. CONNECTIONS AT THE FLOW METER MUST FIRST BE SOLDERED AND THEN WATER PROOFED WITHIN A 3-M DBY CONNECTOR. NOTE: CERTAIN RAIN MASTER REQUIREMENTS MUST ALSO BE MET REGARDING INSTALLATION ORDER AND DISTANCES OF SEPARATION BETWEEN DCA, FLOW METER, MASTER VALVE AND THE FIRST FITTING. IT IS THE RESPONSIBILITY OF THE CONTRACTOR TO ADHERE TO THESE REQUIREMENTS. AT FINAL WALK THROUGH, PROPER OPERATION OF THE FLOW METER AT THE RAIN MASTER CONTROLLER MUST BE DEMONSTRATED.

13. HEADS: ALL HEADS WILL BE INSTALLED USING THE POLYETHYLENE GREEN NIPPLES SCREWED INTO THREADED FITTINGS UNLESS NOTED OTHERWISE.

A. POP-UPS - ONLY TORO 570Z SERIES ARE PERMITTED. INSTALL 3/4 INCH ABOVE THE FINISHED GRADE.

A.4 INCH POP-UPS TURF, TREE BUBBLERS WITHIN TURF AREAS (USE TORO FB-PC NOZZLES).

B.6 INCH POP-UPS WITH NO SIDE INLET: VERY LOW GROUND COVER (LESS THAN 6 INCHES AT MATURE HEIGHT).

C.12 INCH POP-UPS WITH NO SIDE INLET: GROUND COVER AND LOW GROWING SHRUBS. THE GROUND COVER AND SHRUBS SHOULD NOT BE MORE THAN 12" AT MATURITY. THE TOWN INSPECTOR RESERVES THE RIGHT TO DETERMINE OF AND WHEN HEADS WITH SIDE INLETS INSTALLED USING FUNNY PIPE WILL BE ALLOWED. WHEN AUTHORIZED, USE HARDIE BLUE LINE PIPE WITH TORO BARB FITTINGS.

D. ROTARIES - ONLY HUNTER I-20 SERIES ARE PERMITTED, UNLESS NOTED OTHERWISE. INSTALL 3/4" ABOVE FINISHED GRADE.

14. RISERS: USE SCH.80 PVC WITH TORO 570-Z SHRUB HEAD ADAPTERS WITH A SHORT POLYETHYLENE NIPPLE SCREWED INTO THE THREADED FITTING IN THE GROUND. THE INSPECTOR RESERVES THE RIGHT TO DETERMINE PLACEMENT OF RISERS VERSUS POP-UPS.

15. WIRING: ALL WIRES WILL BE 14 GAUGE UF. STATION WIRES WILL BE RED. COMMON WIRES WILL BE WHITE. MASTER VALVE WIRE WILL BE BLUE. ANYTIME THE WIRING CHANGES DIRECTION, SUCH AS AT AN ELBOW OR A TEE, ALLOW A LOOP OF AT LEAST 12 INCHES ALONGSIDE THE FITTING AT THAT LOCATION. ONLY CONTINUOUS WIRE RUNS ARE PERMISSIBLE. WIRE SHOULD FOLLOW THE MAIN LINE WHERE POSSIBLE AND LAY ALONG A SINGLE SIDE NOT CROSSING OVER LATERAL LINES.

16. WIRE CONNECTORS: USE ONLY DBY CONNECTORS FOR ALL FIELD WIRE SPLICES OTHER THAN AT THE VALVES THEMSELVES. ALLOW AT LEAST 36 INCHES OF PIGTAILED WIRE AT EACH SPLICE. USE KING ONE STEP TAN COLORED CONNECTORS FOR ALL VALVE SPLICES. ALL VALVE BOX SPLICES ARE TO BE HOUSED IN STANDARD (LARGE) AMETEK RECTANGULAR PLASTIC VALVE BOXES. ALL FIELD SPLICES ARE TO BE IN 10 INCH ROUND AMETEK PLASTIC VALVE BOXES OR STANDARD, LARGE RECTANGULAR AMETEK PLASTIC VALVE BOXES AT THE DISCRETION OF THE TOWN'S REPRESENTATIVE.

17. BACKFILLING: PRIOR TO ANY BACKFILLING OF TRENCHES, AN INSPECTION BY THE TOWN'S REPRESENTATIVE MUST TAKE PLACE AND ANY NECESSARY CHANGES IMPLEMENTED; OTHERWISE MANUAL EXCAVATION TO ENABLE PROPER INSPECTION WILL BE NECESSARY. USE CLEAN AND
APPROVED TOPSOIL TO BACKFILL ALL PIPE TO A DEPTH. ALL HEADS AND BOXES ARE TO BE BACKFILLED TO GRADE WITH CLEAN TOPSOIL. NO ROCKS GREATER THAN 1 INCH ARE ALLOWED. COMPACT TRENCHES TO ALLEVIATE SETTLING. MINIMAL DEPTH OF COVERAGE IS 12 INCHES.

18. VALVE SEQUENCING MUST BE PERFORMED BY THE CONTRACTOR AND IN AN ORDER APPROVED BY THE TOWN IRRIGATION INSPECTOR. AT LEAST 12 INCHES OF EXTRA STATION WIRING WITHIN THE BOTTOM OF THE PEDESTAL IS NECESSARY FOR EACH ZONE AND MUST BE OF NEAT AND ORDERLY APPEARANCE.

19. ANY DEFICIENCIES IN COVERAGE NOTED BY THE TOWN IRRIGATION INSPECTOR WILL BE RECTIFIED AT THE COST OF THE CONTRACTOR.

20. CONTROLLER: A TOWN'S REPRESENTATIVE WILL DETERMINE THE TYPE OF CONTROLLER TO BE USED. ALL CONTROLLERS SHALL HAVE A CONCRETE PAD OF 36" BY 36" BY 6" (ELEV. 3" ABOVE FINAL GRADE). INSTALL THE CONTROLLER AFTER THE CONCRETE PAD IS COMPLETELY CURED (TWO DAYS). USE ONLY APPROPRIATELY SIZED STAINLESS STEEL BOLTS, WASHERS AND NUTS TO SECURE THE CONTROLLER TO THE CONCRETE PAD. ALL WIRING IS TO ENTER THE PEDESTAL VIA APPROPRIATELY SIZED PVC SWEEP ELBOWS EXTENDING AT LEAST 1" THRU AND 6" OUT FROM UNDER THE PAD. CONTROL/MASTER VALVE WIRING, FLOW METER WIRING AND 120-V SERVICE WIRING ARE TO BE SEPARATED WITH EACH HAVING ITS OWN ACCESS ELBOW. AN ADDITIONAL SPARE 3/4" SWEEP ELBOW FOR PHONE SERVICE IS TO BE INSTALLED AS WELL. ALL NATIONAL AND LOCAL CODES MUST BE FOLLOWED DURING THE INSTALLATION.

A. A/C CONTROLLER- ONLY IRRITROL MC PLUS CONTROLLERS WILL BE ACCEPTABLE. BOTH MINI-CLICK RAIN AND FREEZE SENSORS WILL BE INSTALLED AND PLACED WHERE THEY CAN OPERATE PROPERLY. ALL NON-RAIN MASTER CONTROLLERS MUST BE PERMANENTLY WIRED FOR QUICK ATTACHMENT TO A RAIN MASTER REMOTE CONTROL UNIT.

B. BATTERY AND/OR SOLAR OPERATED CONTROLLERS - ONLY LEIT CONTROLLERS WILL BE ACCEPTABLE. INSTALL RAIN OR FREEZE SENSORS ON THESE CONTROLLERS WITH SKIT8821-4 INSTALLATION KIT.

C. RAIN MASTER: ONLY AN APPROVED SIZE RAIN MASTER EVOLUTION DX-2 CONTROLLER WITH A STAINLESS STEEL PEDESTAL AND HEAVY DUTY TRANSIENT PROTECTION IS PERMITTED. THE CONTROLLER MUST INCLUDE ALL NECESSARY HARDWARE TO ENSURE RELIABLE COMMUNICATION AND OPERATION WITH THE TOWN'S CENTRAL CONTROL LOCATED AT 16801 WESTGROVE. INSTALLATION MUST INCLUDE THE FOLLOWING RAIN MASTER HARDWARE, PURCHASED ONLY FROM A RAIN MASTER SUPPLIER: DX-03 SENSOR BOARD, DX-PH PHONE COMMUNICATION OPTION, FLOW METER (SAME SIZE AS THE MAINLINE), AND SHIELDED EV-CAB-SEN FLOW METER CABLE. IT IS THE CONTRACTOR'S RESPONSIBILITY TO ENTAIL THE COST OF AND WORK IN CONJUNCTION WITH SOUTH WESTERN BELL TELEPHONE TO ESTABLISH A DEDICATED PHONE SERVICE AND INSTALL AN INTERFACE WITHIN THE PEDESTAL AT EACH CONTROLLER LOCATION VIA DIRECT BURIAL CABLE. THE ENTIRE INSTALLATION MUST CONFORM TO RAIN MASTER SPECIFICATIONS AND BE APPROVED BY THE TOWN PRIOR TO AND BE INSPECTED DURING INSTALLATION. SUCH SPECIFICATIONS WILL INCLUDE GROUNDING AND PAD CONFIGURATIONS AND DISTANCES OF SEPARATION FROM WATER METER TO DCA TO MASTER VALVE TO FLOW METER AND THE FIRST FITTING. A FUNCTIONAL MINI-CLIK FREEZE AND RAIN SENSOR MUST BE INSTALLED IN AN APPROVED LOCATION AND BY AN APPROVED METHOD. FOR PART NUMBERS AND PRICING OF ANY RAIN MASTER EQUIPMENT, CONTACT MATT SWOR OF LONGHORN INC. AT (972) 406-0222. FOR TECHNICAL QUESTIONS, CALL JOHN DUBOSE OF RAIN MASTER AT (214) 632-2289.

21. COMMUNICATION IS THE KEY. IF YOU ARE UNSURE, CALL RON LEE, THE OPERATIONS MANAGER OF THE ADDISON PARKS DEPARTMENT (972) 450-2863.

STEPHEN C BERKENBILE & ASSOCIATES
IRRIGATION DESIGN CONSULTANTS

2355 JOHNSON ROAD
SOUTHLAKE, TX 76092

METRO(817) 817-379-9853
FAX (817) 431-1066

STATE OF TEXAS
STEPHEN C. BERKENBILE
IRRIGATION DESIGN CONSULTANT

DATE	DESCRIPTION	REF NO.
1/05/04	ISSUED FOR CONSTRUCTION	
11/07/03	ISSUED FOR BID	

TOWN OF ADDISON IRRIGATION NOTES

SPECTRUM DRIVE EXTENSION

PUBLIC INFRASTRUCTURE

TOWN OF ADDISON, TEXAS

Huitt - Zollars, Inc.
3131 Mckinney Ave., Suite 600, Dallas, TX 75204
Phone (214) 871-3311/Fax (214) 871-0757

DESIGN	DRAWN	APPR.	SCALE	DATE	PROJECT NO.	NO.
HZI	HZI	DEM	NA	NOV 2003	01-3220-01	71

h:\proj\0132201\dgn\BERK03.DGN

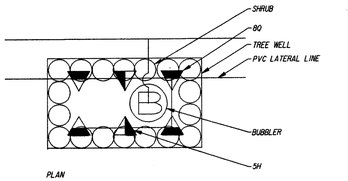

TREE WELL HEAD LAYOUT

not to scale

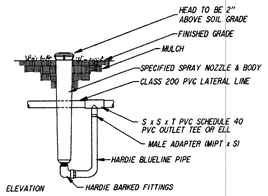

HIGH RISER ASSEMBLY

not to scale

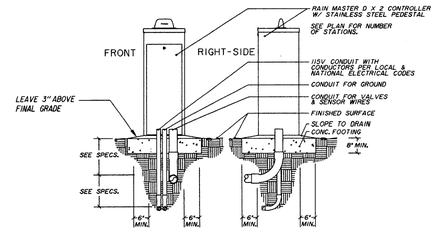

PEDESTAL MOUNTED CONTROLLER

not to scale

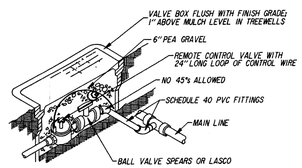

REMOTE CONTROL AND BALL VALVE

not to scale

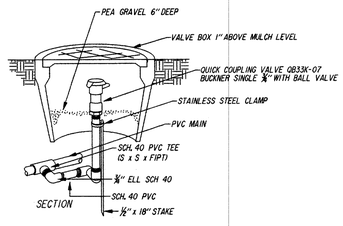

QUICK-COUPLING VALVE

not to scale

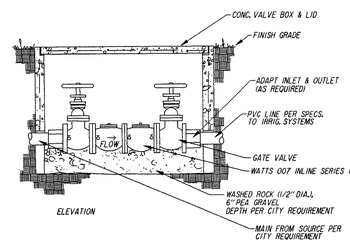

BACKFLOW PREVENTER

not to scale

IRRIGATION LEGEND

	TORO POP-UP LOW ANGLE SHRUB SPRAY 570 MPR SERIES ON A NO. 570Z 12P BODY WITHOUT SIDE INLET. 8' HALF, 8' QUARTER NOZZLE.
B	TORO FLOOD BUBBLER FB-100-PC NOZZLE (0.95 gpm); USE APPROPRIATE SIZED ½" SCH. 80 RISER SO NOZZLE WILL NOT TOUCH BOTTOM OF GRATE AND NOZZLE WILL BE 2" ABOVE MULCH. (REF. DETAIL)
	QUICK COUPLER VALVE-BUCKNER MODEL QCV075 & BALL VALVE.
	WEATHERMATIC 11000 SERIES WITH FLOW CONTROL, WITH PLASTIC LASCO OR SPEARS BALL VALVE UP STREAM OF VALVE.
	SCHEDULE 40 PVC MAINLINE
	CLASS 200 PVC LATERAL LINE, EXCEPT ½ INCH DIAMETER SHALL BE CLASS 315. NOTE: (ALL DIRECTLY BURIED LINE BENEATH PAVING SHALL BE SLEEVED IN SCHEDULE 40 PVC. ALL LINES UNDER PAVING SHALL BE SLEEVED; NO DIRECT BURIAL ALLOWED.)
	GPM THROUGH VALVE
	VALVE SEQUENCING NUMBER
	SIZE OF VALVE
	FLOW METER AND MASTER VALVE AND WIRING
C	STAINLESS STEEL PEDESTAL MOUNTED RAINMASTER WITH PHONE CONNECTION
	4" CLASS 200 PVC SLEEVE
	6" CLASS 200 PVC SLEEVE
M	IRRIGATION WATER METER (MASTER METER BRAND) & TAPING SLEEVE (PROVIDE 1-1/2" IRRIGATION METER WITH 2" TAP)
	WATTS DOUBLE CHECK VALVE: 1-1/2" #007 M SERIES IN LINE QT. IN FLUSH VALVE BOX WITH 2" TAP.
F	FREEZE SENSOR-GLEN-HILTON-#401

IRRIGATION NOTES

1. LINE LAYOUT IS DIAGRAMMATIC-ADJUST HEAD AND LINE LOCATIONS ON SITE TO ACCOMMODATE EXISTING JOB CONDITIONS, SLEEVE LOCATIONS AND TO ACHIEVE COMPLETE COVERAGE.
2. ALL MAIN LINE PIPING SHALL BE BURIED TO HAVE A MINIMUM COVER OF 14". ALL LATERAL PIPING DOWNSTREAM OF THE MAIN LINE SHALL BE BURIED TO HAVE A MINIMUM COVER OF 12".
3. ALL VALVE BOXES SHALL BE GREEN LID AND BLACK BODY (AMETEK) TEN(10") INCHES BY FOUTEEN(14") INCHES (RECTANGULAR) FOR REMOTE CONTROL VALVES AND TEN(10") INCHES (ROUND) FOR QUICK COUPLER VALVES.
4. CONTRACTOR SHALL NOTIFY THE LANDSCAPE ARCHITECT, IF THE STATIC PRESSURE IS LESS THAN THE DESIGN STATIC PRESSURE OF 65 PSI. PRESSURE REGULATION AT THE SOURCE SHALL BE REQUIRED IF PRESSURE IS GREATER THAN 75 psi.
5. ALL WIRING FROM THE IRRIGATION CONTROLLER TO THE REMOTE CONTROL VALVES SHALL BE UF-14/1 DIRECT BURIAL CABLE. (WHITE FOR COMMON, RED FOR STATIONS AND BLUE FOR MASTER VALVE) ALL WIRE SPLICES SHALL BE MADE IN VALVE BOXES ONLY USING KING CONNECTORS AND SEALANT. PROVIDE SCHEDULE 40 SLEEVES FOR WIRE UNDER PAVED AREAS AS REQUIRED.
6. CONTRACTOR SHALL NOT TRENCH IN CRITICAL ROOT ZONE AREA FOR EXISTING TREES.
7. CONTRACTOR SHALL PROVIDE FOR RAINMASTER REMOTE CONTROL SYSTEM.
8. CONTRACTOR SHALL PROVIDE PHONE SERVICE AND ELECTRICAL SERVICE TO THE CONTROLLER.
9. NO FITTINGS WILL BE ALLOWED UNDER PAVED SURFACES WITHOUT SLEEVES.
10. ALL IRRIGATION INSTALLATION SHALL CONFORM TO THE LOCAL CODES AND REGULATIONS.
11. IRRIGATION SYSTEM SHALL BE INSTALLED AND FULLY OPERATIONAL BEFORE LANDSCAPING INSTALLATION.
12. IRRIGATION HEADS SHALL BE PLACED AND ADJUSTED SO AS NOT TO SPRAY ON ANY STRUCTURE, SIDEWALK OR STREET.
13. IRRIGATION HEADS SHALL BE PLACED AND SIZED SO AS NOT TO BE SUSCEPTIBLE TO DAMAGE BY AUTOMOBILE OVERHANGES.
14. IRRIGATION CONTRACTOR SHALL PLACE ADJUSTABLE ARC NOZZLES IN PLACE OF FIXED ARC NOZZLE AS NEEDED TO ELIMINATE OVERSPRAY ON TO PAVEMENT.
15. ADDISON'S SPECIFICATIONS SUPERSEDE ALL OTHER SPECIFICATIONS.

STEPHEN C BERKENBILE & ASSOCIATES
IRRIGATION DESIGN CONSULTANTS
411 HYDE PARK PLACE
DUNCANVILLE, TX 75137
(972) 296-2724
FAX (972) 780-0048

DATE	DESCRIPTION	REF NO.
1/05/04	ISSUED FOR CONSTRUCTION	
11/07/03	ISSUED FOR BID	

IRRIGATION DETAILS

SPECTRUM DRIVE EXTENSION

TOWN OF ADDISON, TEXAS

Huitt - Zollars, Inc.
3131 Mckinney Ave., Suite 600, Dallas, TX 75204
Phone (214) 871-3311/Fax (214) 871-0757

DESIGN	DRAWN	APPR.	SCALE	DATE	PROJECT NO.	NO.
HZI	HZI	SCB	N.T.S.	NOV 2003	01-3220-01	72

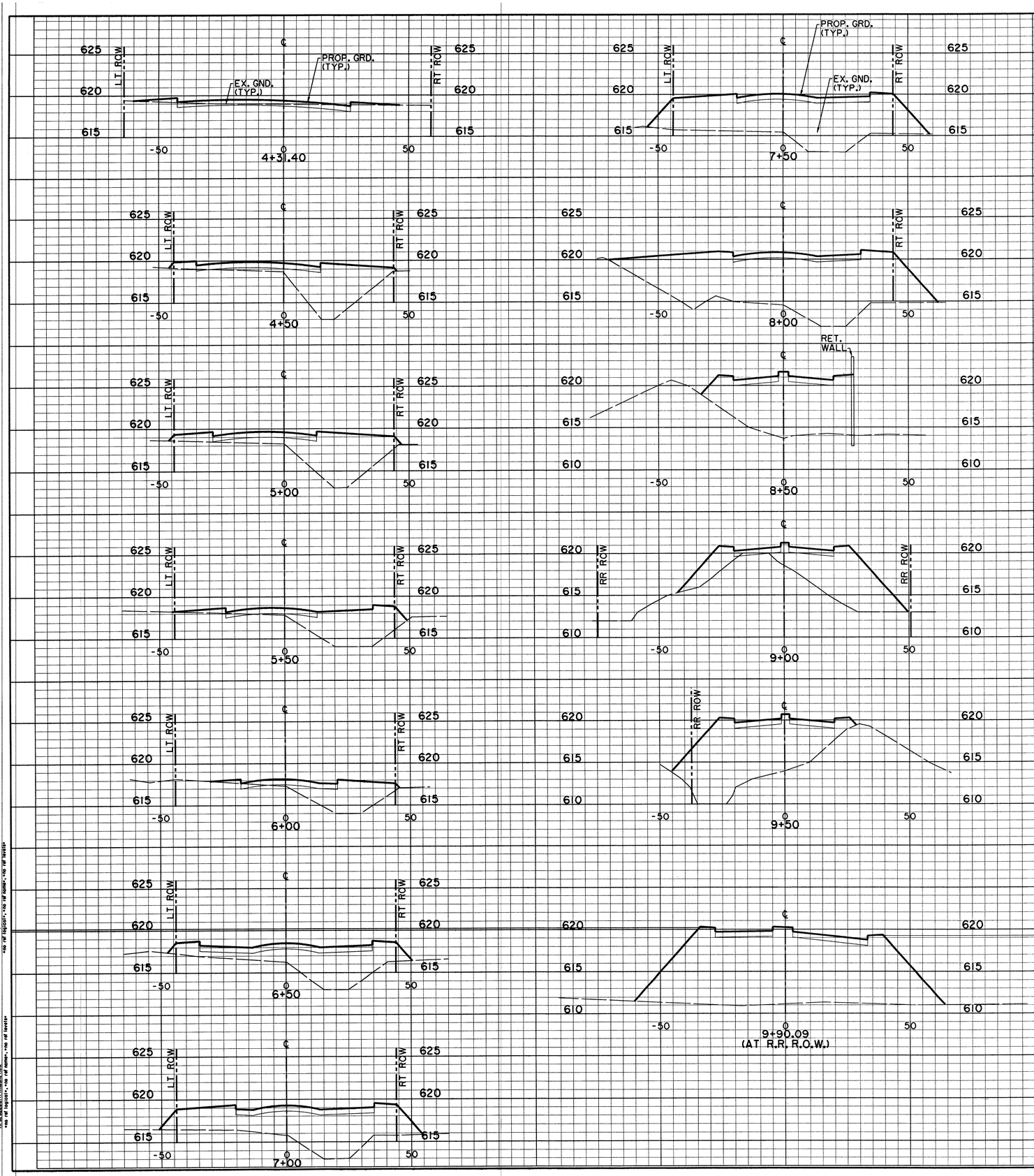

DATE	DESCRIPTION	REF NO.
1/05/04	ISSUED FOR CONSTRUCTION	
11/07/03	ISSUED FOR BID	

STATE OF TEXAS
DAVID E. MEYERS
81512
REGISTERED PROFESSIONAL ENGINEER
1/5/04

PAVING CROSS-SECTIONS

SPECTRUM DRIVE STA. 4+31.40 TO STA. 09+90.09

SPECTRUM DRIVE EXTENSION

TOWN OF ADDISON, TEXAS

Huitt - Zollars, Inc.
3131 Mckinney Ave., Suite 600, Dallas, TX 75204
Phone (214) 871-3311/Fax (214) 871-0757

DESIGN	DRAWN	APPR.	SCALE	DATE	PROJECT NO.	NO.
HZI	HZI	DEM	H: 1"=20' V: 1"=6'	NOV 2003	01-3220-01	73

h:\proj\01322001\dgn\322001CS08.DGN

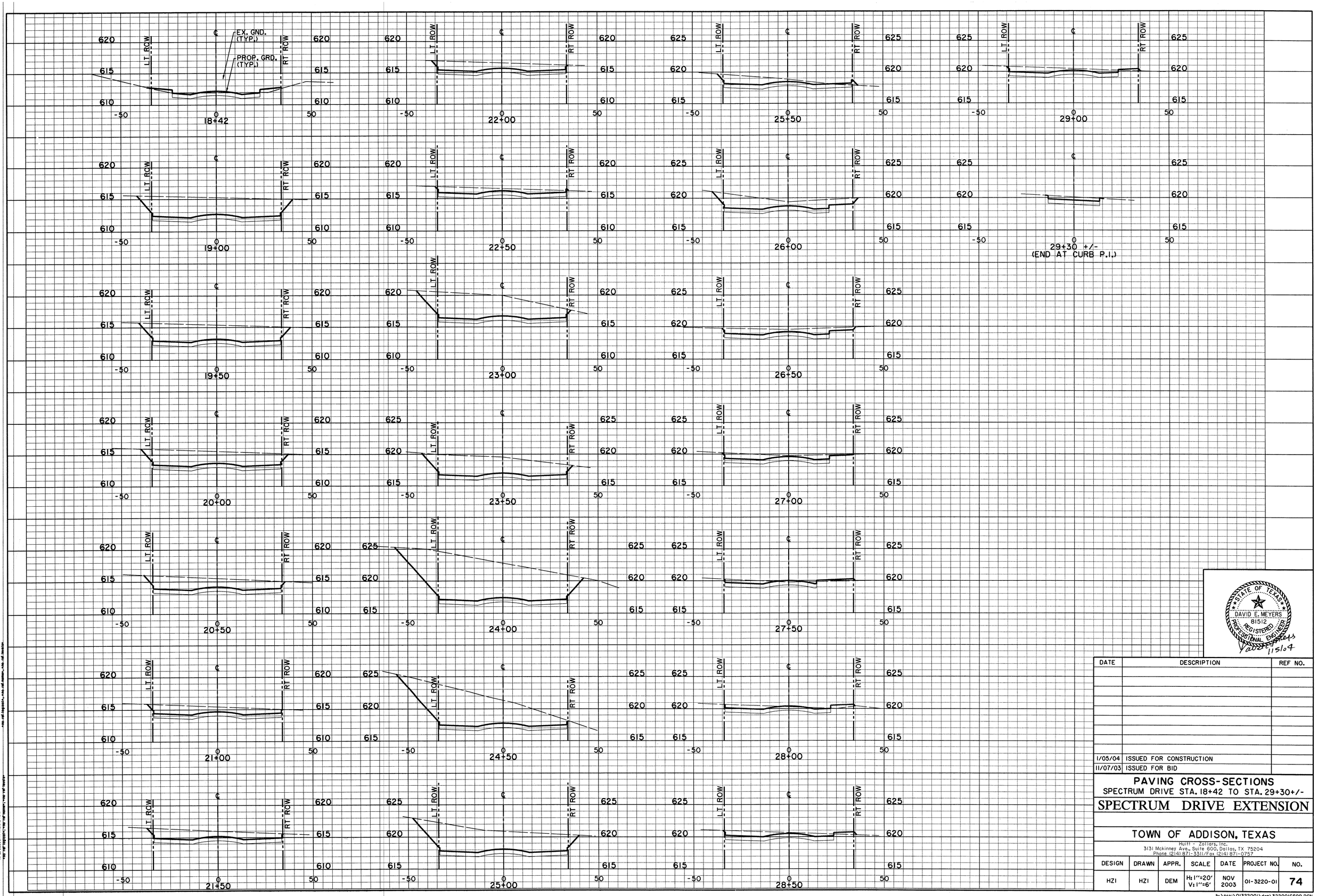

STATE OF TEXAS
DAVID E. MEYERS
81512
REGISTERED PROFESSIONAL ENGINEER
11/5/04

DATE	DESCRIPTION	REF NO.
1/05/04	ISSUED FOR CONSTRUCTION	
11/07/03	ISSUED FOR BID	

PAVING CROSS-SECTIONS

SPECTRUM DRIVE STA. 18+42 TO STA. 29+30+/-

SPECTRUM DRIVE EXTENSION

TOWN OF ADDISON, TEXAS

Huitt - Zollars, Inc.
3131 Mckinney Ave., Suite 600, Dallas, TX 75204
Phone (214) 871-3311/Fax (214) 871-0757

DESIGN	DRAWN	APPR.	SCALE	DATE	PROJECT NO.	NO.
HZI	HZI	DEM	H: 1"=20' V: 1"=6'	NOV 2003	01-3220-01	74