E NUA-1
SHEET NO. 4

DETAIL #6

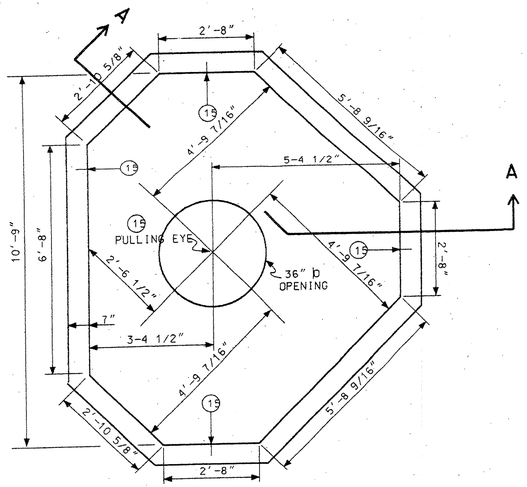

PLAN VIEW

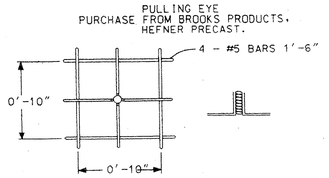

PULLING EYE DETAIL
5 REQUIRED

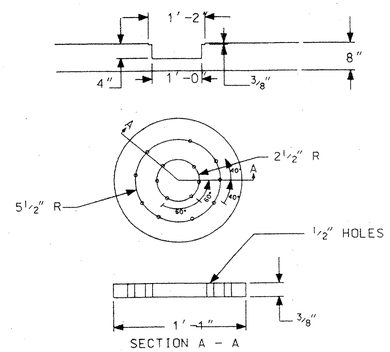

SUMP DETAIL

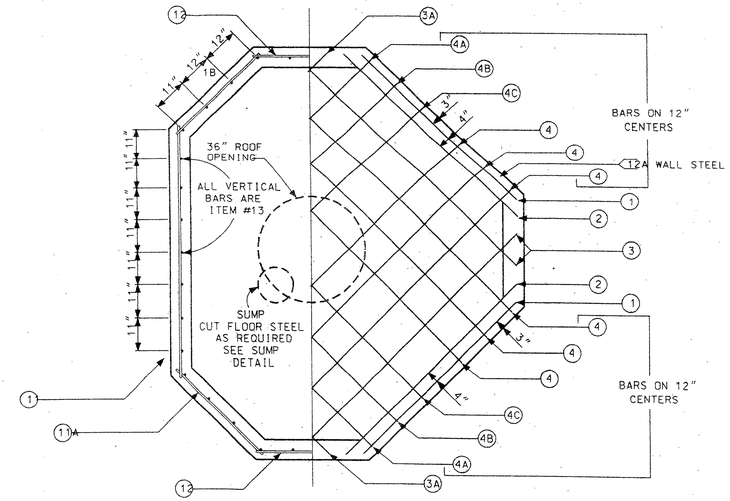

WALL STEEL

FLOOR STEEL

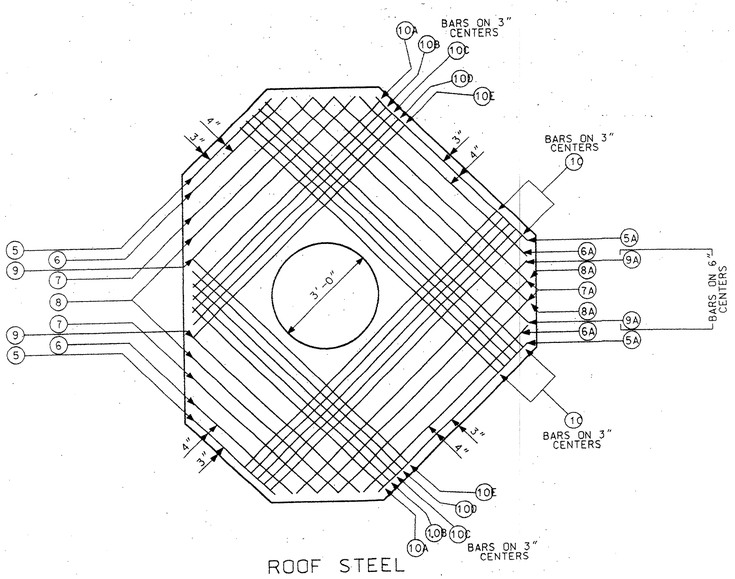

ROOF STEEL

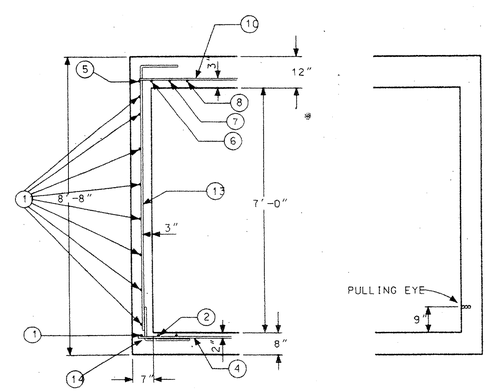

SECTION A - A

"TYPE - 3-WAY"
10'-9" X 8'-9" X 7'-0"

MATERIALS FOR POURED IN PLACE MANHOLE

MARK	LENGTHS FT.	LENGTHS IN.	QUANTITY FLOOR	QUANTITY WALLS	QUANTITY ROOF	QUANTITY TOTAL	SHAPE	SIZE
1	6	1	2			12'-2"	ST.	#5
1A	3	1	2			6'-2"	ST.	#5
1B	3	6	2			7'-0"	ST.	#5
1C	7	3	1			7'-3"	ST.	#5
2	6	10	2			13'-8"	ST.	#5
2A	3	1	2			6'-2"	ST.	#5
2B	3	3	2			6'-6"	ST.	#5
2C	7	5	1			7'-5"	ST.	#5
3	8	10	2			17'-8"	ST.	#5
3A	5	11	2			11'-10"	ST.	#5
4	10	3	6			61'-6"	ST.	#5
4A	7	7	2			15-2'	ST.	#5
4B	8	8	2			17'-4"	ST.	#5
4C	9	7	2			19'-2"	ST.	#5
5	3	1			2	6'-2"	ST.	#5
5A	6	0			2	12'-0"	ST.	#5
6	3	10			2	7'-8"	ST.	#5
6A	6	7			2	13'-2"	ST.	#5
7	4	10			2	9'-8"	ST.	#5
7A	7	8			2	15'-4"	ST.	#5
8	5	8			2	11'-4"	ST.	#5
8A	8	6			2	17'-0"	ST.	#5
9	6	6			2	13'-0"	ST.	#5
9A	9	5			2	18'-10"	ST.	#5
10	10	3			10	102'-6"	ST.	#5
10A	7	6			2	15'-0"	ST.	#5
10B	7	9			2	15'-6"	ST.	#5
10C	8	0			2	16'-0"	ST.	#5
10D	8	3			2	16'-6"	ST.	#5
10E	8	6			2	17'-0"	ST.	#5
11	7	4		8		58'-8"	ST.	#5
11A	3	6		16		56'-0"	ST.	#5
12	3	2		24		76'-0"	ST.	#5
12A	6	1		16		97'-4"	ST.	#5
13	8	9		36		315'-0"	ST.	#5
14	3	4	36			120'-0"	2' 1'-4"	#5
15			1	4		5'-0"	PULLING EYE	1 1/2" X 6" BOLT
CONCRETE			1.94 CU.YDS	5.35 CU.YDS	3.85 CU.YDS	11.14 CU.YDS	3000 PSI	

MANHOLE COVER & FRAME TU STD 310-050 1 EA. 3'-0" OPENING
VENDOR: WESTERN IRON WORKS, 21 EAST SIXTH ST. SAN ANGELO TX. 76903
OR: HEFNER PRECAST, DIVISION OF BROOKS PRODUCTS, 2229 NORTH MAIN, CLEBURNE TX. 76031

STEEL TO CONFORM TO THE LATEST STANDARD SPECIFICATION FOR DEFORMED BILLET-STEEL BARS FOR CONCRETE REINFORCEMENT. [redacted]

SEE DETAIL #9 FOR CONCRETE SPECIFICATION.

GENERAL NOTES SIMILAR TO TYPE "C" MANHOLE, SHEET #1 [redacted]

1/05/04 ISSUED FOR CONSTRUCTION [redacted]

CD

TU ELECTRIC

REVISION DESCRIPTION	DRAWN	CH.	APP.	APP.

UNIT ID

DWG TYPE

ESTIMATE

W.A.

LIST OF DRAWINGS

SCALE (H=) (V=1/2"=1'-)

NETWORK UNDERGROUND APPURTENANCE SHEETS MANHOLE DETAILS

DATE	DWN.	CH.	ENG.	APP.	APP.	W.A.	NO.	DATE
05-12-92	WED	JRC	JRC	JES	PRN			

E NUA-1

SHEET NO. [redacted]