CONSTRUCTION PLANS
FOR
VILLAGE ON THE PARKWAY PHASE II
TOWN OF ADDISON, DALLAS COUNTY, TEXAS

CONSTRUCTION PLANS VILLAGE ON THE PARKWAY PHASE II
TOWN OF ADDISON PROJECT NUMBER: 2013-01

VICINITY MAP
(NOT TO SCALE)

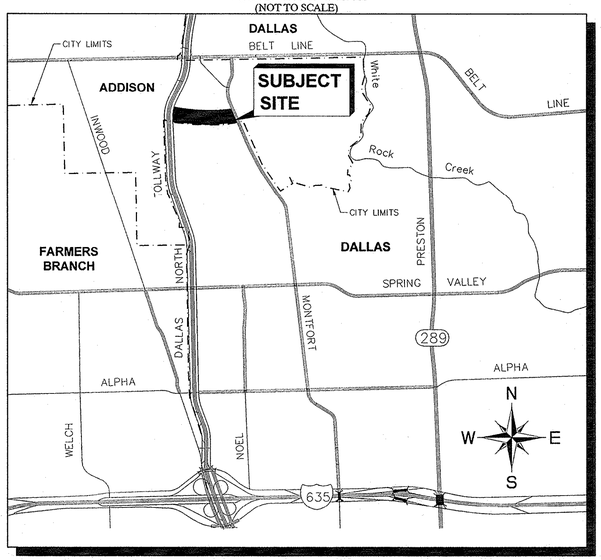

INDEX OF SHEETS

SHEET #	SHEET TITLE	DATE
C-01	COVER SHEET	06/14/2013
1 of 2	AMENDED REPLAT	NOT INCLUDED
2 of 2	AMENDED REPLAT	NOT INCLUDED
C-02	GENERAL NOTES	06/14/2013
C-03	EROSION CONTROL PLAN	06/14/2013
C-04	EROSION CONTROL DETAILS	06/14/2013
C-05	DEMOLITION PLAN	06/14/2013
C-06	GRADING PLAN	06/14/2013
C-07	PAVING & DIMENSION CONTROL PLAN	06/14/2013
C-08	EXISTING CONDITIONS DRAINAGE AREA MAP	NOT INCLUDED
C-09	DRAINAGE AREA MAP	NOT INCLUDED
C-10	STORM SEWER PLAN	NOT INCLUDED
C-11	STORM SEWER PROFILES	NOT INCLUDED
C-12	STORM CALCULATIONS	NOT INCLUDED
C-13	UTILITY PLAN & SANITARY SEWER PROFILE	06/14/2013
C-14	TRAFFIC CONTROL PLAN DALLAS PARKWAY	06/14/2013
C-15	TOWN OF ADDISON STORM DRAINAGE DETAILS	NOT INCLUDED
C-16	TOWN OF ADDISON PAVING DETAILS	06/14/2013
C-17	TOWN OF ADDISON SANITARY SEWER DETAILS	06/14/2013
C-18	TOWN OF ADDISON WATER DETAILS	06/14/2013

BENCHMARKS

BM 1 2" BRASS DISK STAMPED "TXDOT COA-5 GPS" 190'± SOUTH FROM THE INTERSECTION OF EDWIN LEWIS DRIVE AND QUORUM DRIVE; 2'± FROM WEST EDGE OF SIDEWALK, 50.5'± FROM THE WEST SIDE OF MEDIAN IN QUORUM DRIVE & 76'± FROM FIRE HYDRANT.

ELEV=630.10

BM 2 2" BRASS DISK STAMPED "TXDOT COA-10 GPS" AT THE NORTHWEST CORNER OF HAVENSHIRE PLACE AND BELLBROOK DRIVE; 21.80± FROM SANITARY SEWER MANHOLE, 11.10'± FROM STREET SIGN & 2.45± TO PC IN SIDEWALK.

ELEV=593.89

BM 3 CITY OF DALLAS WATER DEPT. BENCHMARK; "□" ON CONCRETE BASE OF 6' BRICK WALL AT THE NORTHEAST CORNER OF CELESTIAL ROAD AND MONTFORT DRIVE.

ELEV=626.81

BM 4 STANDARD CITY OF DALLAS WATER DEPT. BENCHMARK ON CONCRETE CURB ON STORM SEWER INLET AT THE NORTHEAST CORNER OF HUGHES LANE AND PRESTON ROAD; 30'± NORTH OF HUGHES LANE.

ELEV=573.18

BM 5 "⊠" SET ON NORTHWEST CORNER OF CONCRETE PAD FOR SWB TELEPHONE BOX, 15'± EAST OF NORTHBOUND DALLAS NORTH TOLLWAY ACCESS ROAD AND 1,450'± SOUTH OF BELT LINE ROAD.

ELEV=635.30

BM 6 "⊠" SET ON SOUTHEAST CORNER OF CURB INLET; 15'± WEST OF MONTFORT DRIVE AND 750'± SOUTH OF SAKOWITZ DRIVE.

ELEV=603.67

BM 7 "⊠" SET ON SOUTHWEST CORNER OF CURB INLET ON SOUTH SIDE OF BELT LINE ROAD AND 200'± EAST OF DALLAS NORTH TOLLWAY.

ELEV=627.26

BM 8 "⊠" SET ON NORTHEAST CORNER OF "Y" INLET 20'± SOUTH OF SAKOWITZ DRIVE AND 315'± NORTHWEST OF MONTFORT DRIVE.

ELEV=616.09

BM 9 "⊠" SET ON SOUTHEAST CORNER OF CURB INLET ON EAST SIDE OF DALLAS NORTH TOLLWAY ACCESS ROAD AND 300'± SOUTH OF BELT LINE ROAD.

ELEV=627.34

OWNER / DEVELOPER
VOP, LP
2000 McKINNEY AVENUE
SUITE 1000
DALLAS, TX 75201
CONTACT: JARROD YATES

ARCHITECT
GOOD FULTON & FARRELL ARCHITECTS
2808 FAIRMOUNT STREET
SUITE 300
DALLAS, TX 75201
PH. (214) 303-1500
CONTACT: MATTHEW BALSMAN

ENGINEER
Kimley-Horn and Associates, Inc.
5750 GENESIS COURT
FRISCO, TEXAS 75034
PH. (972) 335-3580
CONTACT: TREY BRASWELL, P.E.
FIRM NO. F-928

SURVEYOR
Kimley-Horn and Associates, Inc.
12750 MERIT DRIVE
DALLAS, TEXAS 75251
SUITE 1000
PH. (972) 770-1300
CONTACT: DANA BROWN, R.P.L.S.
FIRM NO. F-928

RECORD DRAWINGS (October 2013)
Information Provided By:
BOB MOORE CONSTRUCTION

STATE OF TEXAS
ROY BRASWELL
104908
LICENSED
PROFESSIONAL ENGINEER
6/14/13

STOP!
CALL BEFORE YOU DIG
DIG TESS
1-800-DIG-TESS
(at least 72 hours prior to digging)

TOWN OF ADDISON PROJECT #: 2013-01
JUNE 14, 2013

This document, together with the concepts and designs presented herein, as an instrument of service, is intended only for the specific purpose and client for which it was prepared. Reuse of and improper reliance on this document without written authorization and adaptation by Kimley-Horn and Associates, Inc. shall be without liability to Kimley-Horn and Associates, Inc.

PLOTTED BY LUCIO, RAMIRO 6/4/2013 1:34 PM
DWG NAME K:\DFW_CIVIL\083085-VOP\DWG\PLAN SET PH II\SHEET-01-COVER.DWG [C-01 COVER SHEET]
LAST SAVED 6/4/2013 1:28 PM

GENERAL NOTES:

1. ALL CONSTRUCTION WITHIN THE ADDISON TOWN LIMITS SHALL BE IN ACCORDANCE WITH THESE PLANS AND THE TOWN OF ADDISON DEVELOPMENT SERVICES' "STANDARD CONSTRUCTION DETAILS". TOWN OF ADDISON STANDARDS GOVERN OVER NCTCOG IN THE EVENT OF A CONFLICT. ALL CONSTRUCTION WITHIN THE DALLAS CITY LIMITS SHALL BE IN ACCORDANCE WITH CITY OF DALLAS CONSTRUCTION STANDARDS AS SPECIFIED IN FILE 251D-1.
2. THE CONTRACTOR IS RESPONSIBLE FOR OBTAINING ALL NECESSARY PERMITS AND APPROVALS.
3. THE CONTRACTOR SHALL BE RESPONSIBLE FOR REMOVAL AND DISPOSAL OFFSITE OF ANY EXISTING PAVING AND STRUCTURES REMOVED.
4. BEFORE STARTING CONSTRUCTION, CONTRACTOR SHALL FIELD VERIFY THE HORIZONTAL AND VERTICAL LOCATION OF ALL EXISTING UTILITIES WHERE PROPOSED UTILITIES ARE BEING CONNECTED. THE LOCATION OF ALL UTILITIES SHOWN ON THESE PLANS WAS TAKEN FROM EXISTING PUBLIC RECORDS. THE EXACT LOCATION AND ELEVATION OF ALL PUBLIC UTILITIES MUST BE DETERMINED BY CONTRACTOR. IT SHALL BE THE DUTY AND RESPONSIBILITY OF THE CONTRACTOR TO ASCERTAIN WHETHER ANY ADDITIONAL FACILITIES OTHER THAN THOSE SHOWN ON THE PLANS MAY BE PRESENT. CONTRACTOR SHALL NOTIFY THE ENGINEER IMMEDIATELY IF A DISCREPANCY AND/OR CONFLICT IS DISCOVERED. CONTRACTOR WILL BE RESPONSIBLE FOR ANY DAMAGE CAUSED TO EXISTING UTILITIES DURING CONSTRUCTION.
5. IT IS THE CONTRACTOR'S RESPONSIBILITY TO MAINTAIN NEAT AND ACCURATE CONSTRUCTION RECORD PLANS.
6. CONTRACTOR SHALL BE RESPONSIBLE FOR ALL CONSTRUCTION SURVEYING. WRITTEN APPROVAL WILL BE REQUIRED FROM THE TOWN FOR ANY CHANGES TO PLANS PRIOR TO CONSTRUCTION.
7. WATER AND SEWER SERVICES SHALL BE CONSTRUCTED IN ACCORDANCE WITH THE TOWN OF ADDISON, TEXAS STANDARDS AND SPECIFICATIONS.
8. ALL EXISTING TRAFFIC AND STREET SIGNS DISTURBED SHALL BE REINSTALLED WHERE APPLICABLE BY THE CONTRACTOR.
9. CONTRACTOR SHALL BE RESPONSIBLE FOR LOCATING ALL EXISTING STRUCTURES, UTILITIES, AND SERVICES PRIOR TO EXCAVATION AND CONSTRUCTION.
10. CONTRACTOR SHALL BE RESPONSIBLE FOR COORDINATING WITH UTILITY COMPANIES FOR THE RELOCATION OF ANY EXISTING UTILITIES.
11. CONTRACTOR SHALL USE ALL NECESSARY PRECAUTIONS TO AVOID CONTACT WITH OVERHEAD AND UNDERGROUND POWER LINES.
12. THE CONTRACTOR SHALL REVIEW AND VERIFY ALL DIMENSIONS SHOWN ON THE PLANS AND REVIEW ALL FIELD CONDITIONS, INCLUDING EXISTING GRADES AND UTILITY FLOW LINES, AND SHOULD DISCREPANCIES OCCUR, THE CONTRACTOR SHALL NOTIFY THE ENGINEER TO OBTAIN THE ENGINEER'S CLARIFICATION BEFORE COMMENCING WITH CONSTRUCTION.
13. THE CONTRACTOR SHALL PROTECT ALL EXISTING STRUCTURES, UTILITIES, AND OTHER FACILITIES TO REMAIN AND SHALL REPAIR ANY DAMAGES DUE TO HIS CONSTRUCTION ACTIVITIES AT NO COST TO THE OWNER.
14. ALL EXISTING SHRUBS, TREES, PLANTING, AND OTHER VEGETATION, OUTSIDE OF PROPERTY LIMITS DISTURBED DURING CONSTRUCTION SHALL BE REPLACED WITH EQUIVALENT MATERIAL BY THE CONTRACTOR AT NO ADDITIONAL COST TO THE OWNER.
15. THE CONTRACTOR SHALL CONSTRUCT SILT SCREENS OR OTHER APPROVED DEVICES PRIOR TO CONSTRUCTION TO PREVENT ADVERSE OFF SITE IMPACT OF STORM WATER QUALITY, AS REQUIRED BY THE TOWN OF ADDISON, TEXAS. CONTRACTOR IS RESPONSIBLE FOR PROPER MAINTENANCE OF THE REQUIRED EROSION CONTROL DEVICES THROUGHOUT THE ENTIRE CONSTRUCTION PROCESS.
16. CONTRACTOR IS RESPONSIBLE FOR REMOVING ALL SILT AND DEBRIS OFFSITE FROM THE EXISTING ROADWAYS AND PROJECT SITE THAT ARE A RESULT OF THE PROPOSED CONSTRUCTION AS REQUESTED BY THE TOWN OF ADDISON, TEXAS. AS A MINIMUM, THIS TASK SHOULD OCCUR ONCE A WEEK.
17. CONNECTIONS TO EXISTING FACILITIES SHALL BE ACCOMPLISHED IN A NEAT AND PROFESSIONAL MANNER. WHEN FIELD CONDITIONS INDICATE ANY VARIANCE FROM DETAILED METHODS, THE CONTRACTOR SHALL PROVIDE COMPREHENSIVE AND DETAILED DRAWINGS (FOR APPROVAL) OF METHODS PROPOSED.
18. WATER SHALL NOT BE PERMITTED IN OPEN TRENCHES DURING CONSTRUCTION.
19. CONTRACTOR SHALL CONTACT THE TOWN ENGINEERING DEPARTMENT'S INSPECTOR ASSIGNED TO THIS PROJECT AT LEAST 48 HOURS PRIOR TO STARTING CONSTRUCTION.
20. CONTRACTOR IS RESPONSIBLE FOR GRASSING DISTURBED AREAS FROM BACK OF CURB TO THE RIGHT-OF-WAY AND AREAS OTHERWISE SPECIFIED ON THE PLANS.
21. ALL STORM DRAIN PIPE SHALL BE CLASS III RCP WITH A MIN. ALLOWABLE STRENGTH OF 4,200 PSI.
22. ALL PRIVATE LANDSCAPE AREA DRAINS SHALL BE OF MATERIAL APPROVED BY BOTH ENGINEER AND TOWN OF ADDISON, TEXAS.
23. CONTRACTOR IS TO CONSTRUCT A STABILIZED CONSTRUCTION EXIT AT ALL PRIMARY POINTS OF ACCESS. THIS STABILIZED EXIT SHALL BE CONSTRUCTED PER TOWN DETAILS.
24. ANY WATER OR SANITARY SEWER SERVICE LOCATED OUTSIDE OF A STREET, ALLEY, OR EASEMENT SHALL BE INSTALLED BY A PLUMBER AND BE INSPECTED BY CODE ENFORCEMENT.
25. THE CONTRACTOR SHALL BE RESPONSIBLE FOR SUBMITTING A TRENCH SAFETY PLAN TO THE TOWN OF ADDISON, TEXAS PUBLIC WORKS DEPARTMENT AT THE TIME OF THE PRECONSTRUCTION MEETING, OR PRIOR TO BEGINNING CONSTRUCTION OF THESE IMPROVEMENTS. CONTRACTOR SHALL BE RESPONSIBLE FOR MAINTAINING TRENCH SAFETY REQUIREMENTS IN ACCORDANCE WITH TOWN STANDARDS, TEXAS STATE LAW, AND O.S.H.A. STANDARDS FOR ALL EXCAVATION IN EXCESS OF FIVE FEET IN DEPTH. NO OPEN TRENCHES WILL BE ALLOWED OVERNIGHT WITHOUT THE PRIOR SPECIFIC WRITTEN APPROVAL OF THE TOWN OF ADDISON, TEXAS PUBLIC WORKS DEPARTMENT. ONSITE SAFETY IS THE SOLE RESPONSIBILITY OF THE CONTRACTOR.
26. DURING CONSTRUCTION, ALL MATERIAL TESTING SHALL BE COORDINATED WITH THE TOWN OF ADDISON CONSTRUCTION INSPECTOR.
27. CONTRACTOR SHALL CONTACT THE TOWN BUILDING OFFICIAL TO LEARN OF ANY UNUSUAL CONSTRUCTION SEQUENCING REQUIREMENTS THE TOWN MAY REQUIRE.
28. THE CONTRACTOR WILL BE RESPONSIBLE FOR COMPLYING WITH TOWN SPECIFICATIONS FOR PAVING CONSTRUCTION, COMPACTION REQUIREMENTS, AND SUBGRADE PREPARATION.
29. CONTRACTOR TO REVIEW DESIGN INTENT OF THESE PLANS AND SUBMIT REQUESTS-FOR-INFORMATION IN A TIMELY MANNER PRIOR TO COMMENCING THAT WORK.
30. REFER TO M.E.P. AND IRRIGATION PLANS FOR SLEEVING REQUIREMENTS. CONTRACTOR SHALL COORDINATE WITH FRANCHISE UTILITY COMPANIES FOR SLEEVING REQUIREMENTS PRIOR TO ANY PAVING ACTIVITIES.
31. ALL APPURTENANCES INSTALLED IN PAVEMENT AREAS SHALL BE ADJUSTED AS REQUIRED TO BE FLUSH WITH FINISHED PAVEMENT.
32. THE SCOPE OF WORK OF THIS PROJECT IS TO BE WITHIN 5' OF BUILDING EXCEPT AS NOTED IN THE GRADING NOTES.
33. THE CONTRACTOR WILL BE SOLELY RESPONSIBLE FOR IMPLEMENTING THE TRAFFIC CONTROL PLAN.

STORM DRAINAGE

1. ALL CONSTRUCTION TO BE IN ACCORDANCE WITH THESE PLANS AND THE TOWN OF ADDISON DEVELOPMENT SERVICES' "STANDARD CONSTRUCTION DETAILS". TOWN OF ADDISON STANDARDS GOVERN OVER NCTCOG IN THE EVENT OF A CONFLICT.
2. THE CONTRACTOR SHALL FIELD VERIFY THE HORIZONTAL AND VERTICAL LOCATIONS OF ALL EXISTING UTILITIES PRIOR TO START OF CONSTRUCTION AND SHALL NOTIFY THE CONSTRUCTION MANAGER AND ENGINEER OF ANY CONFLICTS DISCOVERED. CONTRACTOR IS RESPONSIBLE FOR PROTECTING EXISTING UTILITIES (SHOWN OR NOT SHOWN) WITHIN SCOPE OF CONSTRUCTION. IF ANY EXISTING UTILITIES ARE DAMAGED, THE CONTRACTOR SHALL REPLACE THEM AT HIS OWN EXPENSE.
3. THE CONTRACTOR SHALL MAINTAIN ADEQUATE SITE DRAINAGE DURING ALL PHASES OF CONSTRUCTION. THE CONTRACTOR SHALL USE SILT FENCES (OR OTHER METHODS APPROVED BY THE ENGINEER AND TOWN) AS REQUIRED TO PREVENT SILT AND CONSTRUCTION DEBRIS FROM FLOWING ONTO ADJACENT PROPERTIES. CONTRACTOR SHALL COMPLY WITH ALL APPLICABLE FEDERAL, STATE, OR LOCAL EROSION, CONSERVATION, AND SILTATION REQUIREMENTS. CONTRACTOR SHALL REMOVE ALL TEMPORARY EROSION CONTROL DEVICES UPON COMPLETION OF PERMANENT DRAINAGE FACILITIES AND THE ESTABLISHMENT OF A STAND OF GRASS OR OTHER GROWTH TO PREVENT EROSION.
4. THE CONTRACTOR SHALL SALVAGE AND PROTECT ALL EXISTING POWER POLES, SIGNS, MANHOLES, TELEPHONE RISERS, WATER VALVES, ETC. DURING ALL CONSTRUCTION PHASES.
5. THE CONTRACTOR SHALL BE SOLELY RESPONSIBLE FOR SITE TRENCH SAFETY DURING ALL PHASES OF CONSTRUCTION. THE CONTRACTOR SHALL SUBMIT A TRENCH EXCAVATION PROTECTION PLAN, SEALED BY AN ENGINEER REGISTERED IN THE STATE OF TEXAS, FOR ALL TRENCHES DEEPER THAN FIVE (5) FEET.
6. THE CONTRACTOR SHALL VERIFY AND COORDINATE ALL DIMENSIONS SHOWN, INCLUDING THE HORIZONTAL AND VERTICAL LOCATION OF CURB INLETS AND GRATE INLETS AND ALL UTILITIES CROSSING THE STORM SEWER.

STORM DRAINAGE (CONTINUED)

7. THE SITE UTILITY CONTRACTOR SHALL PROVIDE ALL MATERIALS AND APPURTENANCES NECESSARY FOR COMPLETE INSTALLATION OF THE STORM SEWER.
8. THE INSPECTOR SHALL INSPECT ALL "PUBLIC" CONSTRUCTION. THE CONTRACTOR'S BID PRICE SHALL INCLUDE ALL INSPECTION FEES.
9. CONTRACTOR IS RESPONSIBLE FOR OBTAINING ALL REQUIRED PERMITS AND APPROVALS PRIOR TO COMMENCING CONSTRUCTION.
10. ALL PVC TO RCP CONNECTIONS SHALL BE CONSTRUCTED WITH CONCRETE COLLARS.
11. ALL OFFSITE STORM SEWER LINES SHALL BE MINIMUM CLASS III RCP. ONSITE STORM SEWER LINES 18" AND GREATER MAY BE CLASS III RCP. ALL PRIVATE STORM SHALL BE NOTED AS ON PLANS. CONTRACTOR TO CONTACT ENGINEER WITH QUESTIONS ABOUT PIPE MATERIAL PRIOR TO ORDERING. IF USING HDPE, CONTRACTOR SHALL SUBMIT TECHNICAL DATA TO PROJECT ENGINEER AND TOWN ENGINEER FOR APPROVAL PRIOR TO ORDERING MATERIAL.
12. ALL MATERIALS AND WORKMANSHIP SHALL CONFORM TO THE STANDARD SPECIFICATIONS FOR PUBLIC WORKS CONSTRUCTION FOR NORTH CENTRAL TEXAS, LATEST EDITION, AND ANY SPECIAL PROVISION AS APPROVED BY THE TOWN OF ADDISON, TEXAS.
13. THE CONTRACTOR SHALL PROVIDE CONSTRUCTION STAKING FOR ALL STORM SEWER LINES AND OTHER UTILITIES.
14. EMBEDMENT FOR ALL ONSITE SEWER LINES, PUBLIC OR PRIVATE, SHALL BE PER TOWN OF ADDISON, TEXAS STANDARD DETAILS.
15. REFER TO TNRCC/TCEQ DESIGN GUIDELINES (CHAPTER 290) FOR ALL UTILITY CROSSINGS.

GRADING

1. ALL CONSTRUCTION TO BE IN ACCORDANCE WITH THESE PLANS AND THE TOWN OF ADDISON DEVELOPMENT SERVICES' "STANDARD CONSTRUCTION DETAILS" AND THE FINAL GEOTECHNICAL REPORT. TOWN OF ADDISON STANDARDS GOVERN OVER NCTCOG IN THE EVENT OF A CONFLICT.
2. UNLESS OTHERWISE NOTED, PROPOSED CONTOURS AND SPOT ELEVATIONS SHOWN IN PAVED AREAS REFLECT TOP OF PAVEMENT SURFACE. ADD .50' TO PAVING GRADE FOR TOP OF CURB GRADE. THE LIMITS OF EARTHWORK IN PAVED AREAS IS THE BOTTOM OF PAVEMENT.
3. THE CONTRACTOR SHALL FIELD VERIFY THE HORIZONTAL AND VERTICAL LOCATIONS OF ALL EXISTING UTILITIES PRIOR TO START OF CONSTRUCTION AND SHALL NOTIFY THE CONSTRUCTION MANAGER AND ENGINEER OF ANY CONFLICTS DISCOVERED. CONTRACTOR IS RESPONSIBLE FOR PROTECTING EXISTING UTILITIES (SHOWN OR NOT SHOWN) WITHIN SCOPE OF CONSTRUCTION. IF ANY EXISTING UTILITIES ARE DAMAGED, THE CONTRACTOR SHALL REPLACE THEM AT HIS OWN EXPENSE.
4. THE CONTRACTOR SHALL MAINTAIN ADEQUATE SITE DRAINAGE DURING ALL PHASES OF CONSTRUCTION. THE CONTRACTOR SHALL USE SILT FENCES (OR OTHER METHODS APPROVED BY THE ENGINEER AND TOWN) AS REQUIRED TO PREVENT SILT AND CONSTRUCTION DEBRIS FROM FLOWING ONTO ADJACENT PROPERTIES. CONTRACTOR SHALL COMPLY WITH ALL APPLICABLE FEDERAL, STATE, OR LOCAL EROSION, CONSERVATION, AND SILTATION REQUIREMENTS. CONTRACTOR SHALL REMOVE ALL TEMPORARY EROSION CONTROL DEVICES UPON COMPLETION OF PERMANENT DRAINAGE FACILITIES AND THE ESTABLISHMENT OF A STAND OF GRASS OR OTHER GROWTH TO PREVENT EROSION. CONTRACTOR IS RESPONSIBLE FOR FILING N.O.I. AND N.O.T. WITH THE TNRCC. CONTRACTOR SOLELY RESPONSIBLE FOR ALL MANDATED SWPPP RECORD KEEPING AND REPORTING.
5. SEE STRUCTURAL SPECIFICATIONS FOR BUILDING PAD DETAILS. THE CONTRACTOR SHALL TAKE ALL AVAILABLE PRECAUTIONS TO CONTROL DUST. CONTRACTOR SHALL CONTROL DUST BY SPRINKLING WATER, OR BY OTHER MEANS APPROVED BY THE TOWN AND ENGINEER, AT NO ADDITIONAL COST TO THE OWNER.
6. ALL EXCAVATING IS UNCLASSIFIED AND SHALL INCLUDE ALL MATERIALS ENCOUNTERED. UNUSABLE EXCAVATED MATERIAL AND ALL WASTE RESULTING FROM SITE CLEARING AND GRUBBING SHALL BE DISPOSED OF OFF SITE BY THE GRADING CONTRACTOR AT HIS EXPENSE.
7. BEFORE ANY EARTHWORK IS PERFORMED, THE CONTRACTOR SHALL STAKE OUT AND MARK THE LIMITS OF PAVEMENT AND OTHER ITEMS ESTABLISHED BY THE PLANS. THE CONTRACTOR SHALL PROVIDE ALL NECESSARY ENGINEERING AND SURVEYING FOR LINE AND GRADE CONTROL POINTS RELATED TO EARTHWORK.
8. THE CONTRACTOR SHALL SALVAGE AND PROTECT ALL EXISTING POWER POLES, SIGNS, MANHOLES, TELEPHONE RISERS, WATER VALVES, ETC. THAT ARE TO REMAIN OR BE RELOCATED DURING ALL CONSTRUCTION PHASES.
9. REFERENCE STRUCTURAL DRAWINGS AND SPECIFICATIONS AND GEOTECHNICAL REPORT FOR BUILDING PAD AND PAVING SUBGRADE INFORMATION.
10. THE CONTRACTOR SHALL CLEAR AND GRUB THE SITE AND PLACE, COMPACT, AND MOISTURE CONDITION ALL FILL PER THE PROJECT GEOTECHNICAL ENGINEER'S SPECIFICATIONS. THE FILL MATERIAL TO BE USED SHALL BE APPROVED BY THE GEOTECHNICAL ENGINEER PRIOR TO PLACEMENT.
11. GRADING CONTRACTOR SHALL COORDINATE WITH THE UTILITY COMPANIES FOR ANY REQUIRED UTILITY ADJUSTMENTS AND/OR RELOCATIONS.
12. TESTING OF MATERIALS REQUIRED FOR THE CONSTRUCTION OF THE PAVING IMPROVEMENTS SHALL BE PERFORMED BY AN APPROVED AGENCY FOR TESTING MATERIALS. THE NOMINATION OF THE TESTING LABORATORY AND THE PAYMENTS FOR SUCH TESTING SERVICES SHALL BE MADE BY THE CONTRACTOR. THE OWNER SHALL APPROVE THE LABORATORY NOMINATED TO DO THE TESTING OF MATERIALS. IT SHALL BE THE CONTRACTOR'S RESPONSIBILITY TO SHOW BY STANDARD TESTING PROCEDURES THAT THE WORK CONSTRUCTED DOES MEET THE REQUIREMENTS OF THE TOWN'S SPECIFICATIONS AND THESE PLANS.
13. CONTRACTOR SHALL CALL 1-800-DIG-TESS AT LEAST 72 HOURS PRIOR TO COMMENCING CONSTRUCTION FOR FIELD LOCATIONS OF UTILITIES IN THE VICINITY OF THE SITE.
14. PROPOSED CONTOURS ARE APPROXIMATE. PROPOSED SPOT ELEVATIONS AND DESIGNATED GRADIENT ARE TO BE USED IN CASE OF DISCREPANCY.
15. REFER TO SITE PLAN AND FINAL PLAT FOR HORIZONTAL DIMENSIONS.
16. CONTRACTOR IS RESPONSIBLE FOR OBTAINING ALL PERMITS AND APPROVALS PRIOR TO CONSTRUCTION.
17. REFER TO EROSION CONTROL PLAN FOR EROSION CONTROL DEVICES TO BE INSTALLED PRIOR TO COMMENCING CONSTRUCTION.
18. NO TREE SHALL BE REMOVED OR DAMAGED WITHOUT PRIOR AUTHORIZATION OF THE OWNER OR OWNER'S REPRESENTATIVE. EXISTING TREES SHALL BE PRESERVED WHENEVER POSSIBLE.
19. CONTRACTOR SHALL VERIFY HORIZONTAL AND VERTICAL CONTROL PRIOR TO COMMENCING CONSTRUCTION AND SHALL NOTIFY ENGINEER OF ANY DISCREPANCIES BEFORE CONSTRUCTION COMMENCES.
20. AFTER PLACEMENT OF SUBGRADE AND PRIOR TO PLACEMENT OF PAVEMENT, CONTRACTOR SHALL TEST AND OBSERVE PAVEMENT AREAS FOR EVIDENCE OF PONDING. ALL AREAS SHALL ADEQUATELY DRAIN TOWARDS THE INTENDED STRUCTURE TO CONVEY STORM RUNOFF. CONTRACTOR SHALL IMMEDIATELY NOTIFY OWNER AND ENGINEER IF ANY DISCREPANCIES ARE DISCOVERED.

PAVING

1. ALL CONSTRUCTION WITHIN THE ADDISON TOWN LIMITS SHALL BE IN ACCORDANCE WITH THESE PLANS AND THE TOWN OF ADDISON DEVELOPMENT SERVICES' "STANDARD CONSTRUCTION DETAILS". TOWN OF ADDISON STANDARDS GOVERN OVER NCTCOG IN THE EVENT OF A CONFLICT. ALL CONSTRUCTION WITHIN THE DALLAS CITY LIMITS SHALL BE IN ACCORDANCE WITH CITY OF DALLAS CONSTRUCTION STANDARDS AS SPECIFIED IN FILE 251D-1.
2. THE CONTRACTOR SHALL FIELD VERIFY THE HORIZONTAL AND VERTICAL LOCATIONS OF ALL EXISTING UTILITIES PRIOR TO START OF CONSTRUCTION AND SHALL NOTIFY THE CONSTRUCTION MANAGER AND ENGINEER OF ANY CONFLICTS DISCOVERED. CONTRACTOR IS RESPONSIBLE FOR PROTECTING EXISTING UTILITIES (SHOWN OR NOT SHOWN) WITHIN SCOPE OF CONSTRUCTION. IF ANY EXISTING UTILITIES ARE DAMAGED, THE CONTRACTOR SHALL REPLACE THEM AT HIS OWN EXPENSE.
3. THE CONTRACTOR SHALL MAINTAIN ADEQUATE SITE DRAINAGE DURING ALL PHASES OF CONSTRUCTION. THE CONTRACTOR SHALL USE SILT FENCES (OR OTHER METHODS APPROVED BY THE ENGINEER AND TOWN) AS REQUIRED TO PREVENT SILT AND CONSTRUCTION DEBRIS FROM FLOWING ONTO ADJACENT PROPERTIES. CONTRACTOR SHALL COMPLY WITH ALL APPLICABLE FEDERAL, STATE, OR LOCAL EROSION, CONSERVATION, AND SILTATION ORDINANCES. CONTRACTOR SHALL REMOVE ALL TEMPORARY EROSION CONTROL DEVICES UPON COMPLETION OF PERMANENT DRAINAGE FACILITIES AND THE ESTABLISHMENT OF A STAND OF GRASS OR OTHER GROWTH TO PREVENT EROSION.
4. ALL EXCAVATING IS UNCLASSIFIED AND SHALL INCLUDE ALL MATERIALS ENCOUNTERED. UNUSABLE EXCAVATED MATERIAL AND ALL WASTE RESULTING FROM SITE CLEARING AND GRUBBING SHALL BE DISPOSED OF OFF SITE BY THE GRADING CONTRACTOR AT HIS EXPENSE.
5. BEFORE ANY EARTHWORK IS DONE, THE CONTRACTOR SHALL STAKE OUT AND MARK THE LIMITS OF PAVEMENT AND OTHER ITEMS ESTABLISHED BY THE PLANS. THE CONTRACTOR SHALL PROVIDE ALL NECESSARY SURVEYING FOR LINE AND GRADE CONTROL POINTS RELATED TO EARTHWORK.
6. THE CONTRACTOR SHALL SALVAGE AND PROTECT ALL EXISTING POWER POLES, SIGNS, MANHOLES, TELEPHONE RISERS, WATER VALVES, ETC. THAT ARE TO REMAIN OR BE RELOCATED DURING ALL CONSTRUCTION PHASES.
7. THE CONTRACTOR SHALL CLEAR AND GRUB THE SITE AND PLACE, COMPACT, AND MOISTURE CONDITION ALL FILL PER THE PROJECT GEOTECHNICAL ENGINEER'S SPECIFICATIONS (REFER TO GEOTECHNICAL REPORT BY ALPHA TESTING, REPORT NO. G120099 DATED FEBRUARY 17, 2012). THE FILL MATERIAL TO BE USED SHALL BE APPROVED BY THE GEOTECHNICAL ENGINEER PRIOR TO PLACEMENT.

PAVING (CONTINUED)

8. TESTING OF MATERIALS REQUIRED FOR THE CONSTRUCTION OF THE PAVING IMPROVEMENTS SHALL BE PERFORMED BY AN APPROVED AGENCY FOR TESTING MATERIALS. THE NOMINATION OF THE TESTING LABORATORY AND THE PAVEMENT OF SUCH TESTING SERVICES SHALL BE MADE BY THE CONTRACTOR. THE OWNER SHALL APPROVE THE LABORATORY NOMINATED TO DO THE TESTING OF MATERIALS. IT SHALL BE THE CONTRACTOR'S RESPONSIBILITY TO SHOW BY STANDARD TESTING PROCEDURES THAT THE WORK CONSTRUCTED DOES MEET THE REQUIREMENTS OF THE TOWN'S SPECIFICATIONS AND THESE PLANS.
9. BARRIER FREE RAMPS SHALL BE CONSTRUCTED AT ALL DRIVEWAY APPROACHES PER TOWN STANDARDS. RAMPS SHALL MEET ALL ADA AND TAS REQUIREMENTS.
10. ALL SIGNS, PAVEMENT MARKINGS, AND OTHER TRAFFIC CONTROL DEVICES SHALL CONFORM TO THE "TEXAS MANUAL ON UNIFORM TRAFFIC CONTROL DEVICES".
11. CONTRACTOR SHALL FURNISH AND INSTALL ALL PAVEMENT MARKINGS FOR FIRE LANES, PARKING STALLS, HANDICAPPED PARKING SYMBOLS, AND MISCELLANEOUS STRIPING WITHIN PARKING LOT AND AROUND BUILDING AS SHOWN ON THE PLANS. ALL PAINT FOR PAVEMENT MARKINGS SHALL ADHERE TO SECTION 2.9 OF THE N.C.T.C.O.G. STANDARD SPECIFICATIONS UNDER "TRAFFIC PAINT".
12. REFER TO GEOTECHNICAL REPORT FOR PAVING JOINT LAYOUT PLAN.
13. REFER TO GEOTECHNICAL REPORT FOR REINFORCEMENT STEEL.
14. FIRE LANES SHALL BE DESIGNATED BY CONTINUOUS PAINTED LINES SIX (6) INCHES IN WIDTH ON EACH SIDE OF THE FIRE LANE STARTING AT THE ENTRANCE FROM THE STREET AND TO BE CONTINUED TO THE EXIT. SUCH LINES SHALL BE BRIGHT RED IN COLOR.
15. FIRE LANES ADJACENT TO CURBS SHALL BE OUTLINED BY A SIX (6) INCH WIDE STRIP PAINTED BRIGHT RED IN COLOR ALONG THE CURB'S GUTTER LINE.
16. THE WORDS "FIRE LANE" AND "NO PARKING" SHALL BE STENCILED IN SIX (6) INCH HIGH WHITE LETTERS ALTERNATELY EVERY FIFTEEN (15) FEET ALONG THE RED FIRE LANE STRIPES.
17. ALL HANDICAP RAMPING, STRIPING, AND PAVEMENT MARKINGS SHALL CONFORM TO THE AMERICANS WITH DISABILITIES ACT OF 2010.
18. ACCESSIBLE PEDESTRIAN ROUTES ON PUBLIC RIGHTS-OF-WAY AND PRIVATE PROPERTY SHALL COMPLY WITH AMERICANS WITH DISABILITIES ACT ACCESSIBILITY GUIDELINES (ADAAG) AND TEXAS ACCESSIBILITY STANDARDS (TAS). DESIGN AND CONSTRUCTION OF ALL CURB RAMPS ON PUBLIC RIGHTS-OF-WAY SHALL BE IN ACCORDANCE WITH TEXAS DEPARTMENT OF TRANSPORTATION STANDARD DETAIL PED-05, SHEETS 1 THROUGH 4.
19. REFERENCE LANDSCAPE PLANS FOR LOCATION AND TYPE OF HANDICAP RAMPS TO BE PROVIDED AND FOR FLATWORK.
20. ALL MATERIALS AND WORKMANSHIP SHALL CONFORM TO THE STANDARD SPECIFICATIONS FOR PUBLIC WORKS CONSTRUCTION FOR NORTH CENTRAL TEXAS, LATEST EDITION, AND ANY SPECIAL PROVISION AS APPROVED BY THE TOWN OF ADDISON, TEXAS.
21. SIDEWALKS ADJACENT TO CURB SHALL BE CONNECTED TO BACK OF CURB USING LONGITUDINAL BUTT JOINT PER TOWN OF ADDISON STANDARD DETAIL SD-P25.
22. UNLESS THE PLANS SPECIFICALLY DICTATE TO THE CONTRARY, ON-SITE AND OTHER DIRECTIONAL SIGNS SHALL BE LOCATED OUT OF THE PEDESTRIAN AND AUTOMOBILE ROUTES AND SHALL BE LOCATED BETWEEN THREE TO FIVE FEET BEHIND THE NEAREST BACK OF CURB. SIGN HEIGHT, LOCATION, AND STRUCTURE SHALL BE SUCH THAT THE SIGNS POSE NO THREAT TO PUBLIC SAFETY.
23. UNLESS THE PLANS SPECIFICALLY DICTATE TO THE CONTRARY, ON-SITE AND OTHER DIRECTIONAL SIGNS SHALL BE ORIENTED SO THEY ARE READILY VISIBLE TO THE ONCOMING TRAFFIC FOR WHICH THEY ARE INTENDED, FIELD ADJUSTMENTS OF LOCATION AND ORIENTATION OF THE SIGNS ARE TO BE MADE TO ACCOMPLISH THIS.
24. CONTRACTOR RESPONSIBLE FOR INSTALLING NECESSARY CONDUIT FOR LIGHTING, IRRIGATION, ETC. PRIOR TO PLACEMENT OF PAVEMENT. ALL CONSTRUCTION DOCUMENTS (CIVIL, MEP, LANDSCAPE, AND ARCHITECT) SHALL BE CONSULTED.
25. BEFORE PLACING PAVEMENT, CONTRACTOR SHALL VERIFY THAT SUITABLE HANDICAPPED ROUTES (PER A.D.A. & T.A.S.) EXIST TO AND FROM EVERY DOOR. IN NO CASE SHALL HANDICAP RAMP SLOPES EXCEED 1 VERTICAL TO 12 HORIZONTAL. IN NO CASE SHALL SIDEWALK CROSS SLOPES EXCEED 2.0 PERCENT. IN NO CASE SHALL LONGITUDINAL SIDEWALK SLOPES EXCEED 5.0 PERCENT. CONTRACTOR SHALL CONTACT ENGINEER PRIOR TO PAVING IF ANY EXCESSIVE SLOPES ARE ENCOUNTERED. NO CONTRACTOR CHANGE ORDERS WILL BE ACCEPTED FOR A.D.A. AND T.A.S. COMPLIANCE ISSUES.
26. REFER TO GEOTECHNICAL REPORT FOR SOIL COMPACTION SPECIFICATION.

WATER AND SANITARY

1. ALL MATERIALS AND WORKMANSHIP TO CONFORM TO THE REQUIREMENTS SET FORTH IN THE TOWN OF ADDISON, TEXAS "WATER SYSTEM REQUIREMENTS" MANUAL FOR GENERAL PROCEDURES FOR THE DESIGN OF WATER LINES.
2. IN THE EVENT AN ITEM IS NOT COVERED BY THIS MANUAL, THEN THE N.T.C.O.G. GENERAL SPECIFICATIONS COVERING SUCH ITEMS SHALL APPLY.
3. WATER MAINS SHALL BE PVC C-900, PER TOWN STANDARD, EXCEPT WHEN OTHERWISE NOTED.
4. SEWER PIPE SHALL BE MINIMUM SDR 35 PVC OR PVC SDR 26.
5. WATER MAINS SHALL HAVE THE FOLLOWING MINIMUM COVER BELOW STREET GRADES:

SIZE	COVER
6"	3.5'
8"	4.0'
10"	4.0'
12"	5.0'
LARGER	AS SHOWN ON PLANS

6. PLASTIC TAPE FOR UTILITY SERVICES SHALL BE ATTACHED TO THE ENDS OF ALL WATER AND SEWER SERVICE LINES AND EXTEND ABOVE GROUND LEVEL. THE TAPE SHALL MEET THE FOLLOWING SPECIFICATION:
   A. "ALLEN MARKING TAPE" OR APPROVED EQUAL.
   B. ROLL MARKED CONTINUOUSLY, "CAUTION WATER LINE" OR "CAUTION SEWER LINE".
   C. SIX (6) INCHES IN WIDTH.
   D. GREEN TAPE FOR SEWER SERVICES.
   E. BLUE TAPE FOR WATER SERVICES.
7. ALL FIRE HYDRANT MANUFACTURERS SHALL BE APPROVED BY TOWN OF ADDISON, TEXAS. THE TOWN OF ADDISON WILL REQUIRE A SUBMITTAL FOR ANY PROPOSED EQUAL PRODUCT. REFER TO TOWN OF ADDISON WATER SYSTEM REQUIREMENTS.
8. VIDEO TAPE OF SEWER LINE TO BE PROVIDED TO DIRECTOR OF PUBLIC SERVICES, BY THE CONTRACTOR.
9. FIRE HYDRANTS SHALL BE LOCATED BETWEEN 2.0' AND 4.0' FROM THE BACK OF CURB. PER TOWN OF ADDISON STANDARD DETAIL SD-W16
10. IT IS THE CONTRACTORS RESPONSIBILITY TO FIELD VERIFY EXACT LOCATIONS OF EXISTING PUBLIC AND PRIVATE UTILITIES AND SERVICES PRIOR TO COMMENCING CONSTRUCTION. THE CONTRACTOR SHALL CALL 1-800-DIG-TESS FOR FIELD LOCATION OF EXISTING UTILITIES. CALL AT LEAST 48 HOURS BEFORE LOCATIONS ARE NEEDED. NOTE THAT THE DIG TESS SERVICE DOES NOT LOCATE ALL UTILITIES, ONLY THOSE REGISTERED WITH THE SERVICE.
11. REFER TO SITE GRADING PLANS, PAVING PLANS, AND LANDSCAPE PLANS FOR FINAL GRADES FOR DETERMINING PROPOSED MANHOLE RIM ELEVATIONS.
12. LOCATIONS AND SIZES OF EXISTING PUBLIC AND PRIVATE UTILITIES SHOWN ON THESE PLANS ARE FROM TOWN AND UTILITY COMPANY RECORDS ONLY. THE CONTRACTOR IS SOLELY RESPONSIBLE FOR LOCATING ALL UTILITIES AND FOR DAMAGES RESULTING FROM FAILURE TO DO SO.
13. THE CONTRACTOR SHALL BE RESPONSIBLE FOR PROVIDING DIMENSIONED "RECORD" PLANS TO THE ENGINEER SHOWING THE LOCATION OF WATER AND SEWER SERVICES AND ANY DEVIATIONS FROM PLANS MADE DURING CONSTRUCTION.
14. THE CONTRACTOR SHALL VERIFY ALL DIMENSIONS SHOWN, COORDINATING THE HORIZONTAL AND VERTICAL LOCATION OF ALL UTILITY SERVICES ENTERING THE BUILDING AND/OR CROSSING OTHER UTILITIES.
15. ALL WATER AND SANITARY SEWER SERVICES SHALL TERMINATE FIVE (5) FEET OUTSIDE THE BUILDING, UNLESS NOTED OTHERWISE.
16. THE SITE UTILITY CONTRACTOR SHALL PROVIDE ALL MATERIALS AND APPURTENANCES NECESSARY FOR COMPLETE INSTALLATION OF THE UTILITIES. ALL PUBLIC PIPE, STRUCTURES, AND FITTINGS SHALL BE INSPECTED BY THE TOWN INSPECTOR PRIOR TO BEING COVERED. THE INSPECTOR MUST ALSO BE PRESENT DURING DISINFECTION AND PRESSURE TESTING OF ALL MAINS. THE CONTRACTOR'S BID PRICE SHALL INCLUDE ALL INSPECTION FEES.
17. THE CONTRACTOR SHALL BE SOLELY RESPONSIBLE FOR SITE TRENCH SAFETY DURING ALL PHASES OF CONSTRUCTION. THE CONTRACTOR SHALL SUBMIT A TRENCH EXCAVATION PROTECTION PLAN, SEALED BY A GEOTECHNICAL ENGINEER REGISTERED IN THE STATE OF TEXAS, FOR ALL TRENCHES DEEPER THAN FIVE (5) FEET, AT THE PRECONSTRUCTION MEETING OR PRIOR TO THE COMMENCEMENT OF CONSTRUCTION.
18. ALL MATERIALS AND WORKMANSHIP SHALL CONFORM TO THE STANDARD SPECIFICATIONS FOR PUBLIC WORKS CONSTRUCTION FOR NORTH CENTRAL TEXAS, LATEST EDITION, AND ANY SPECIAL PROVISION AS APPROVED BY THE TOWN OF ADDISON, TEXAS.
19. THE CONTRACTOR SHALL PROVIDE CONSTRUCTION STAKING FOR ALL WATER AND SANITARY SEWER LINES AND OTHER UTILITIES.
20. REFER TO TNRCC/TCEQ DESIGN GUIDELINES (CHAPTER 290) FOR ALL UTILITY CROSSINGS.

KHA GENERAL CONSTRUCTION NOTES

1. ALL CONSTRUCTION SHALL BE IN ACCORDANCE WITH THE STANDARD SPECIFICATIONS FOR PUBLIC WORKS CONSTRUCTION FOR THE NORTH CENTRAL TEXAS COUNCIL OF GOVERNMENTS (LATEST EDITION), THE TOWN OF ADDISON STANDARDS, AND ANY SPECIAL PROVISIONS ADOPTED BY THE TOWN OF ADDISON, THE SUBDIVISION RULES AND REGULATIONS OF THE TOWN OF ADDISON (LATEST EDITION), THE PROJECT SPECIFICATION BOOK, AND THESE CONSTRUCTION PLANS. IN CASE OF CONFLICTING SPECIFICATIONS OR DETAILS, THE OWNER AND ENGINEER SHALL BE CONTACTED PRIOR TO CONSTRUCTION.
2. THE CONTRACTOR SHALL BE RESPONSIBLE TO FURNISH ALL MATERIAL AND LABOR TO CONSTRUCT THE FACILITY AS SHOWN AND DESCRIBED IN THE CONSTRUCTION DOCUMENTS IN ACCORDANCE WITH THE APPROPRIATE APPROVING AUTHORITIES, SPECIFICATIONS AND REQUIREMENTS. THE CONTRACTOR SHALL VISIT THE SITE PRIOR TO BIDDING TO DETERMINE EXISTING CONDITIONS.
3. ALL EXISTING UTILITIES SHOWN ARE LOCATED ACCORDING TO THE INFORMATION AVAILABLE TO THE ENGINEER AT THE TIME THE DRAWINGS WERE PREPARED AND HAVE NOT BEEN INDEPENDENTLY VERIFIED BY THE CITY. GUARANTEE IS NOT MADE THAT ALL EXISTING UNDERGROUND UTILITIES ARE SHOWN OR THAT THE LOCATION OF THOSE SHOWN ARE ACCURATE. THE LOCATIONS SHOWN ARE FOR BIDDING PURPOSES ONLY. FINDING THE ACTUAL LOCATION OF ANY EXISTING UTILITIES IS THE CONTRACTORS RESPONSIBILITY AND SHALL BE DONE BEFORE HE COMMENCES ANY WORK IN THE VICINITY. FURTHERMORE, THE CONTRACTOR SHALL BE FULLY RESPONSIBLE FOR ANY AND ALL DAMAGES DUE TO THE CONTRACTORS FAILURE TO EXACTLY LOCATE AND PRESERVE ANY AND ALL UTILITIES. THE OWNER OR ENGINEER WILL ASSUME NO LIABILITY FOR ANY DAMAGES SUSTAINED OR COST INCURRED BECAUSE OF THE OPERATIONS IN THE VICINITY OF EXISTING UTILITIES OR STRUCTURES, NOR FOR TEMPORARY BRACING AND SHORING OF SAME. IF IT IS NECESSARY TO SHORE, BRACE, SWING OR RELOCATE A UTILITY, THE UTILITY COMPANY OR DEPARTMENT AFFECTED SHALL BE CONTACTED BY THE CONTRACTOR AND THEIR PERMISSION OBTAINED REGARDING THE METHOD TO USE FOR SUCH WORK.
4. IT IS THE CONTRACTORS RESPONSIBILITY TO CONTACT THE VARIOUS UTILITY COMPANIES WHICH MAY HAVE BURIED OR AERIAL UTILITIES WITHIN OR NEAR THE CONSTRUCTION AREA BEFORE COMMENCING WORK. THE CONTRACTOR SHALL PROVIDE 72 HOURS MINIMUM NOTICE TO ALL UTILITY COMPANIES PRIOR TO BEGINNING CONSTRUCTION.
5. THE CONTRACTOR SHALL BE RESPONSIBLE TO OBTAIN ALL REQUIRED CONSTRUCTION PERMITS AND BONDS PRIOR TO CONSTRUCTION.
6. ANY DISCREPANCIES ON THE DRAWINGS SHALL BE IMMEDIATELY BROUGHT TO THE ATTENTION OF THE TOWN, ARCHITECT AND ENGINEER BEFORE COMMENCING WORK. NO FIELD CHANGES OR DEVIATIONS FROM DESIGN ARE TO BE MADE WITHOUT PRIOR APPROVAL OF THE CITY AND NOTIFICATION TO THE ARCHITECT AND THE ENGINEER. NO CONSIDERATION WILL BE GIVEN TO CHANGE ORDERS FOR WHICH THE TOWN, ENGINEER, AND OWNER WAS NOT CONTACTED PRIOR TO CONSTRUCTION OF THE AFFECTED ITEM. WRITTEN APPROVAL WILL BE REQUIRED FROM THE TOWN FOR ANY CHANGES TO PLANS PRIOR TO CONSTRUCTION.
7. ALL NECESSARY INSPECTIONS AND/OR CERTIFICATIONS REQUIRED BY CODES, JURISDICTIONAL AGENCIES AND/OR UTILITY SERVICE COMPANIES SHALL BE PERFORMED PRIOR TO BUILDING POSSESSION AND THE FINAL CONNECTION OF SERVICES.
8. CONTRACTOR SHALL VERIFY BENCHMARKS AND DATUMS PRIOR TO COMMENCING CONSTRUCTION OR STAKING OF IMPROVEMENTS.
9. EXISTING CONTOURS AS SHOWN ON THIS PLAN WERE TAKEN FROM A FIELD TOPOGRAPHIC SURVEY PREPARED BY KIMLEY-HORN AND ASSOCIATES, INC.
10. CONTRACTOR SHALL THOROUGHLY CHECK COORDINATION OF CIVIL, LANDSCAPE, MEP, ARCHITECTURAL, AND OTHER PLANS PRIOR TO COMMENCING CONSTRUCTION. OWNER/ENGINEER SHALL BE NOTIFIED OF ANY DISCREPANCY PRIOR TO COMMENCING WITH CONSTRUCTION.
11. THE CONTRACTOR IS RESPONSIBLE FOR COORDINATING ADJUSTMENTS, RELOCATIONS AND INSTALLATIONS OF FRANCHISE UTILITIES NECESSARY FOR ON-SITE AND OFF-SITE CONSTRUCTION.
12. CONTRACTOR IS RESPONSIBLE FOR ALL CONSTRUCTION FIELD STAKING AND TESTING, UNLESS SPECIFIED OTHERWISE BY THE OWNER.
13. UNLESS NOTED OTHERWISE, CONTRACTOR SHALL REPLACE ANY FENCING, CURBING, ETC. THAT IS DESTROYED DUE TO THE CONSTRUCTION ACTIVITIES.
14. TRENCH SAFETY DESIGN WILL BE THE RESPONSIBILITY OF THE UTILITY CONTRACTOR. CONTRACTOR SHALL SUBMIT A TRENCH SAFETY PLAN (SEALED BY A PROFESSIONAL ENGINEER LICENSED IN THE STATE OF TEXAS) TO THE TOWN OF ADDISON PUBLIC WORKS DEPARTMENT FOR REVIEW PRIOR TO THE START OF ANY UTILITY CONSTRUCTION.
15. ALL CONTRACTORS MUST CONFINE THEIR ACTIVITIES TO THE WORK AREA. NO ENCROACHMENTS ONTO DEVELOPED OR UNDEVELOPED AREAS WILL BE ALLOWED. ANY DAMAGE RESULTING THEREFROM SHALL BE CONTRACTOR'S RESPONSIBILITY TO REPAIR.
16. LIGHT POLES AND SIGNS SHALL NOT BE PLACED IN ADA ACCESSIBLE ROUTES OR ACCESSIBLE ACCESS AISLES.
17. ALL AREAS IN EXISTING RIGHTS-OF-WAY DISTURBED BY SITE CONSTRUCTION SHALL BE REGRADED AND LANDSCAPED OR PAVED (TO WHATEVER CONDITION EXISTED BEFORE DISTURBANCE). ALL DISTURBED AREAS SHALL BE REPAIRED TO THE SAME OR BETTER CONDITION THAN BEFORE AREA WAS DISTURBED.
18. THE CONTRACTOR SHALL HAVE AVAILABLE AT THE JOB SITE AT ALL TIMES ONE COPY OF THE CONTRACT DOCUMENTS INCLUDING PLANS, SPECIFICATIONS, AND SPECIAL CONDITIONS, COPIES OF ANY REQUIRED CONSTRUCTION PERMITS, AND EROSION CONTROL PLANS AND INSPECTION REPORTS (SWPPP).
19. THE CONTRACTOR SHALL REVIEW AND VERIFY ALL DIMENSIONS, ELEVATIONS, AND EXISTING CONTOURS SHOWN ON THE PLANS AND ALL FIELD CONDITIONS THAT MAY AFFECT CONSTRUCTION. SHOULD DISCREPANCIES OCCUR, THE CONTRACTOR SHALL NOTIFY THE ENGINEER TO OBTAIN THE ENGINEER'S CLARIFICATION BEFORE COMMENCING WITH THE CONSTRUCTION.
20. PROPOSED CONTOURS AND SPOT ELEVATIONS SHOWN REFLECT FINISH SURFACE. THE LIMITS OF EARTHWORK IN PAVED AREAS IS THE BOTTOM OF PAVEMENT.
21. CONTRACTOR SHALL USE ALL NECESSARY SAFETY PRECAUTIONS TO AVOID CONTACT WITH OVERHEAD AND UNDERGROUND POWER LINES.
22. THE CONTRACTOR SHALL MAINTAIN ADEQUATE SITE DRAINAGE DURING ALL PHASES OF CONSTRUCTION. THE CONTRACTOR SHALL USE SILT FENCES (OR OTHER METHODS APPROVED BY THE ENGINEER AND CITY) AS REQUIRED TO PREVENT SILT AND CONSTRUCTION DEBRIS FROM FLOWING ONTO ADJACENT PROPERTIES. CONTRACTOR SHALL COMPLY WITH ALL APPLICABLE FEDERAL, STATE, OR LOCAL EROSION, CONSERVATION, AND SILTATION ORDINANCES. CONTRACTOR SHALL REMOVE ALL TEMPORARY EROSION CONTROL DEVICES UPON COMPLETION OF PERMANENT DRAINAGE FACILITIES AND THE ESTABLISHMENT OF A STAND OF GRASS OR OTHER GROWTH TO PREVENT EROSION.
23. CONTRACTOR TO DISPOSE OF ALL EXCESS EXCAVATION MATERIALS AS DIRECTED BY THE OWNER.
24. ALL EXCAVATION IS UNCLASSIFIED AND SHALL INCLUDE ALL MATERIALS ENCOUNTERED. UNUSABLE EXCAVATED MATERIAL AND ALL WASTE RESULTING FROM SITE CLEARING AND GRUBBING SHALL BE DISPOSED OF OFF SITE BY THE GRADING CONTRACTOR AT HIS EXPENSE.
25. THE CONTRACTOR SHALL CLEAR AND GRUB THE SITE AND PLACE, COMPACT, AND MOISTURE CONDITION ALL FILL PER THE PROJECT GEOTECHNICAL ENGINEER'S SPECIFICATIONS. THE FILL MATERIAL TO BE USED SHALL BE APPROVED BY THE GEOTECHNICAL ENGINEER PRIOR TO PLACEMENT.
26. ALL SIGNS, PAVEMENT MARKINGS, AND OTHER TRAFFIC CONTROL DEVICES SHALL CONFORM TO THE "TEXAS MANUAL ON UNIFORM TRAFFIC CONTROL DEVICES".
27. ALL REINFORCING STEEL SHALL CONFORM TO ASTM A-615, GRADE 60, AND SHALL BE SUPPORTED BY BAR CHAIRS.
28. WATER LINES CROSSING STORM SEWER LINES AND SANITARY SEWER LINES SHALL BE IN CONFORMANCE WITH ALL TEXAS COMMISSION ON ENVIRONMENTAL QUALITY (TCEQ) SPECIFICATIONS.
29. THE SITE UTILITY CONTRACTOR SHALL PROVIDE ALL MATERIALS AND APPURTENANCES NECESSARY FOR COMPLETE INSTALLATION OF THE UTILITIES. ALL PUBLIC PIPE STRUCTURES AND FITTINGS SHALL BE INSPECTED BY THE CITY INSPECTOR PRIOR TO BEING COVERED. THE INSPECTOR MUST ALSO BE PRESENT DURING DISINFECTION AND PRESSURE TESTING OF ALL MAINS. THE CONTRACTOR'S BID PRICE SHALL INCLUDE ALL INSPECTION FEES. AS AN ALTERNATE, THE OWNER RESERVES THE RIGHT TO PAY THE INSPECTION FEES DIRECTLY TO THE CITY.
30. ALL FIRE HYDRANTS, FITTINGS, VALVES, AND PIPE ENDS SHALL BE BLOCKED WITH CONCRETE PER CITY STANDARDS.
31. TOP RIM ELEVATIONS OF ALL SANITARY SEWER MANHOLES SHALL BE COORDINATED WITH TOP OF PAVEMENT OR FINISHED GRADE.
32. THE SITE UTILITY CONTRACTOR SHALL PROVIDE ALL MATERIALS AND APPURTENANCES NECESSARY FOR COMPLETE INSTALLATION OF THE STORM SEWER.
33. CONTRACTOR SHALL CONSTRUCT PROPOSED PAVEMENT TO MATCH EXISTING PAVEMENT WITH A SMOOTH, FLUSH, CONNECTION.
34. THE CONTRACTOR SHALL PROTECT ALL EXISTING STRUCTURES, UTILITIES, AND OTHER FACILITIES TO REMAIN AND SHALL REPAIR ANY DAMAGES DUE TO HIS CONSTRUCTION ACTIVITIES AT NO COST TO THE OWNER.
35. CONTRACTOR TO ADJUST ALL GATE VALVE COVERS TO MATCH PROPOSED PAVING GRADES.
36. THE OPERATING NUT OF ALL GATE VALVES SHALL BE 2 FEET BELOW FINISH GRADE (MINIMUM).

36. THESE PLANS, PREPARED BY KIMLEY-HORN AND ASSOCIATES, INC. DO NOT EXTEND TO OR INCLUDE DESIGNS OR SYSTEMS PERTAINING TO THE SAFETY OF THE CONTRACTOR OR ITS EMPLOYEES, AGENTS OR REPRESENTATIVES IN THE PERFORMANCE OF THE WORK. THE ENGINEER'S SEAL HEREON DOES NOT EXTEND TO ANY SUCH SAFETY SYSTEM THAT MAY NOW OR HEREAFTER BE INCORPORATED IN THESE PLANS. THE CONTRACTOR SHALL BE RESPONSIBLE FOR IMPLEMENTATION OF ALL REQUIRED SAFETY PROCEDURES AND PROGRAMS.
37. REFER TO SWPPP REPORT AND EROSION CONTROL PLANS FOR APPLICABLE NOTES.
38. REFER TO ARCHITECTURAL AND STRUCTURAL PLANS TO VERIFY ALL BUILDING DIMENSIONS.
39. REFER TO ARCHITECTURAL PLANS FOR DETAILED BUILDING ENTRANCE LAYOUTS, RAMPS, LANDSCAPE, AND SIDEWALKS.

NOTE

REFER TO
TCEQ DESIGN GUIDELINES
(CHAPTER 217-SEWER)
FOR ALL UTILITY CROSSINGS.

GEOTECHNICAL REPORT
ALPHA REPORT NO. G120099-1
ALPHA TESTING, INC
DALLAS, TEXAS
NOVEMBER 30, 2012

STOP!
CALL BEFORE YOU DIG
DIG TESS
1-800-DIG-TESS
(at least 72 hours prior to digging)

WARNING: CONTRACTOR TO VERIFY PRESENCE AND EXACT LOCATION OF ALL UTILITIES PRIOR TO CONSTRUCTION.

RECORD DRAWINGS
(October 2013)
Information Provided By:
BOB MOORE CONSTRUCTION

No.	REVISIONS	DATE	BY

Kimley-Horn and Associates, Inc.
State of Texas Registration No. F-928
5750 GENESIS COURT, SUITE 200, FRISCO, TX 75034
PHONE: 972-335-3580 FAX: 972-335-3779
WWW.KIMLEY-HORN.COM

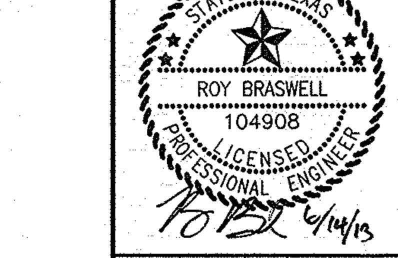

KHA PROJECT	063319038
DATE	06/14/2013
SCALE	AS SHOWN
DESIGNED BY	TBB
DRAWN BY	AAE
CHECKED BY	TBB

VILLAGE ON THE PARKWAY PHASE II
ADDISON, TEXAS

GENERAL NOTES

SHEET NUMBER
C-02

This document, together with the concepts and designs presented herein, as an instrument of service, is intended only for the specific purpose and client for which it was prepared. Reuse of and improper reliance on this document without written authorization and adaptation by Kimley-Horn and Associates, Inc. shall be without liability to Kimley-Horn and Associates, Inc.

PLOTTED BY LUCIO, RAMIRO 6/14/2013 1:24 PM
DWG NAME K:\FRI_CIVIL\063319038-VOP\DWG\PLAN SET PHASE II\C-02-GENERAL NOTES.DWG [C-02 GENERAL NOTES]
LAST SAVED 6/14/2013 12:59 PM

EROSION CONTROL SCHEDULE AND PHASING

THE PROJECT SHALL GENERALLY CONFORM TO THE FOLLOWING:

PHASE 1 - GRADING
- A. CONSTRUCT TEMPORARY CONSTRUCTION ENTRANCE AND SILT FENCE ACCORDING TO THE APPROXIMATE LOCATION AND SHOWN ON GRADING AND EROSION CONTROL PLAN NOTES AND DETAIL SHEET.
- B. BEGIN CLEARING AND GRADING OF SITE.
- C. SEED AND RE-VEGETATE SLOPES WHERE SHOWN.

PHASE 2 - UTILITIES
- A. KEEP ALL STORM WATER POLLUTION PREVENTION MEASURES IN PLACE.
- B. INSTALL STORM DRAINS AS SPECIFIED ON PLAN SHEETS.
- C. INSTALL INLET PROTECTION.

PHASE 3 - PAVING
- A. KEEP ALL STORM WATER POLLUTION PREVENTION MEASURES IN PLACE. REMOVE AS NEEDED TO PAVE.
- B. STABILIZE SUBGRADE.
- C. PAVE PARKING LOT AND SIDEWALKS AS SPECIFIED ON PLAN SHEETS.
- D. REMOVE TEMPORARY CONSTRUCTION ENTRANCE.

PHASE 4 - LANDSCAPING AND SOIL STABILIZATION
- A. RE-VEGETATE LOT AND PARKWAYS
- B. LANDSCAPE CONTRACTOR SHALL RE-VEGETATE ALL AREAS RESERVED FOR LANDSCAPE VEGETATIVE COVERS.
- C. REMOVE EROSION CONTROL DEVICES WHEN GROUND COVER ESTABLISHED.

SITE MAP-SITE SPECIFIC NOTES

1. CONSTRUCTION ENTRANCE SHALL BE LOCATED SO AS TO PROVIDE THE LEAST AMOUNT OF DISTURBANCE TO THE FLOW OF TRAFFIC IN AND OUT OF THE SITE. ADDITIONALLY, THE CONSTRUCTION ENTRANCE SHALL BE LOCATED TO COINCIDE WITH THE PHASING OF THE PARKING LOT CONSTRUCTION.

2. CONTRACTOR SHALL PROVIDE INLET PROTECTION FOR ANY AFFECTED INLETS DOWNSTREAM OF THE PROPOSED IMPROVEMENTS, IF NEEDED.

3. THE NATURE OF THIS SITE'S CONSTRUCTION CONSISTS OF CLEARING & SITE PREPARATION, EARTHWORK, PAVING, AND LANDSCAPING.

4. SEDIMENTATION BASIN:
NEITHER A TEMPORARY NOR PERMANENT SEDIMENTATION BASIN HAS BEEN PROVIDED ON THIS SITE BECAUSE:
1. SITE IS LESS THAN 10 ACRES IN AREA.

5. POST CONSTRUCTION STORM WATER POLLUTION CONTROL MEASURES INCLUDE STABILIZATION BY PERMANENT PAVING AND LANDSCAPING.

6. VELOCITY DISSIPATION DEVICES ARE NOT REQUIRED AT THIS SITE.

7. DISTURBED PORTIONS OF SITE MUST BE STABILIZED. STABILIZATION PRACTICES MUST BE INITIATED WITHIN 14 DAYS IN PORTIONS OF THE SITE WHERE CONSTRUCTION HAS BEEN EITHER TEMPORARILY OR PERMANENTLY CEASED, UNLESS EXCEPTED WITHIN THE TPDES PERMIT. CONTRACTOR SHALL REMOVE TEMPORARY EROSION CONTROL DEVICES UPON COMPLETION OF STABILIZATION OR PERMANENT DRAINAGE FACILITIES.

9. CONTRACTOR IS RESPONSIBLE FOR MODIFYING THE SWPPP/SITE MAP TO INCLUDE BMP'S FOR ANY OFF-SITE MATERIAL WASTE, BORROW OR EQUIPMENT STORAGE AREAS.

STOP!
CALL BEFORE YOU DIG
DIG TESS
1-800-DIG-TESS
(at least 72 hours prior to digging)

DISTURBED AREA

TOTAL AREA DISTURBED	5.9 AC.

!!WARNING!!

EXISTING UTILITIES IN THE AREA. CONTRACTOR SHALL FIELD VERIFY THE LOCATION OF ALL EXISTING UTILITIES WITH THE PROVIDER PRIOR TO START OF CONSTRUCTION AND SHALL IMMEDIATELY NOTIFY THE ENGINEER OF ANY CONFLICTS DISCOVERED. CONTRACTOR IS RESPONSIBLE FOR COORDINATING UTILITY RELOCATION WHERE NECESSARY AND PROTECTING EXISTING UTILITIES (SHOWN OR NOT SHOWN). IF ANY EXISTING UTILITIES ARE DAMAGED, THE CONTRACTOR SHALL REPLACE THEM AT THEIR OWN EXPENSE.

FLOOPLAIN NOTE

AS DETERMINED BY THE FLOOD INSURANCE RATE MAPS FOR DALLAS COUNTY, THE SUBJECT PROPERTY DOES NOT APPEAR TO LIE WITHIN A SPECIAL FLOOD HAZARD AREA (100 YEAR FLOOD), MAP DATE 09/23/01 COMMUNITY PANEL NO. 48113C0180 J, SUBJECT LOT IS LOCATED IN ZONE "X". IF THIS SITE IS NOT WITHIN AN IDENTIFIED FLOOD HAZARD AREA, THIS FLOOD STATEMENT DOES NOT IMPLY THAT THE PROPERTY AND/OR STRUCTURES THEREON WILL BE FREE FROM FLOODING OR FLOOD DAMAGE. ON RARE OCCASIONS, GREATER FLOODS CAN AND WILL OCCUR AND FLOOD HEIGHTS MAY BE INCREASED BY MAN-MADE OR NATURAL CAUSES. THIS FLOOD STATEMENT SHALL NOT CREATE LIABILITY ON THE PART OF THE SURVEYOR OR ENGINEER.

BENCHMARKS

BM 5 "⊠" SET ON NORTHWEST CORNER OF CONCRETE PAD FOR SWB TELEPHONE BOX, 15'± EAST OF NORTHBOUND DALLAS NORTH TOLLWAY ACCESS ROAD AND 1,450'± SOUTH OF BELT LINE ROAD.

ELEV=635.30

BM 6 "⊠" SET ON SOUTHEAST CORNER OF CURB INLET; 15'± WEST OF MONTFORT DRIVE AND 750'± SOUTH OF SAKOWITZ DRIVE.

ELEV=603.67

BM 9 "⊠" SET ON SOUTHEAST CORNER OF CURB INLET ON EAST SIDE OF DALLAS NORTH TOLLWAY ACCESS ROAD AND 300'± SOUTH OF BELT LINE ROAD.

ELEV=627.34

NOTE

REFER TO SHEET C-04 FOR EROSION CONTROL DETAILS AND ADDITIONAL GENERAL EROSION CONTROL NOTES.

N
W E
S
0 50' 100'
GRAPHIC SCALE 50'

NOTE

PRIOR TO CONSTRUCTION, CONTRACTOR TO NOTIFY ENGINEER IMMEDIATELY SHOULD THERE BE ANY DISCREPANCIES OR IF EXISTING FIELD CONDITIONS VARY FROM THOSE SHOWN ON THESE PLANS.

RECORD DRAWINGS (October 2013)
Information Provided By:
BOB MOORE CONSTRUCTION

NOTE

IN ORDER TO COMPLY WITH THE UNITED STATES ENVIRONMENTAL PROTECTION AGENCY AND ALL OTHER AGENCIES HAVING JURISDICTION, THE CONTRACTOR SHALL PROVIDE ANY ADDITIONAL EROSION OR POLLUTION DEVICES, AS REQUIRED, DURING CONSTRUCTION, FILING OF N.O.I. AND N.O.T. (PER EPA REQUIREMENTS) SHALL BE THE RESPONSIBILITY OF THE CONTRACTOR AND THE OWNER.

SITE MAP-GENERAL NOTES

1. CONTRACTOR IS SOLELY RESPONSIBLE FOR SELECTION, IMPLEMENTATION, MAINTENANCE, AND EFFECTIVENESS OF ALL SWPPP CONTROLS - CONTROLS SHOWN ON THIS SITE MAP ARE SUGGESTED CONTROLS ONLY.

2. CONTRACTOR SHALL RECORD INSTALLATION, MAINTENANCE OR MODIFICATION, AND REMOVAL DATES FOR EACH BMP EMPLOYED (WHETHER CALLED OUT ON ORIGINAL SWPPP OR NOT) DIRECTLY ON THE SITE MAP.

3. DRAINAGE PATTERNS ARE SHOWN ON THIS PLAN BY PROPOSED AND EXISTING CONTOURS, FLOW ARROWS, AND SLOPES.

4. TEMPORARY AND PERMANENT STABILIZATION PRACTICES AND BMP'S SHALL BE INSTALLED AT THE EARLIEST POSSIBLE TIME DURING THE CONSTRUCTION SEQUENCE. AS AN EXAMPLE, PERIMETER SILT FENCE SHALL BE INSTALLED BEFORE COMMENCEMENT OF ANY GRADING ACTIVITIES. OTHER BMP'S SHALL BE INSTALLED AS SOON AS PRACTICABLE AND SHALL BE MAINTAINED UNTIL FINAL SITE STABILIZATION IS ATTAINED. CONTRACTOR SHALL ALSO REFERENCE CIVIL PLANS SINCE PERMANENT STABILIZATION IS PROVIDED BY LANDSCAPING AND SITE PAVING.

5. BMP'S HAVE BEEN LOCATED AS INDICATED ON THIS PLAN IN ACCORDANCE WITH GENERALLY ACCEPTED ENGINEERING PRACTICES IN ORDER TO MINIMIZE SEDIMENT TRANSFER. FOR EXAMPLE: SILT FENCES LOCATED AT TOE OF SLOPE AND INLET PROTECTION FOR INLETS RECEIVING SEDIMENT FROM SITE RUN-OFF.

6. SANITARY SEWER EFFLUENT IS DISPOSED OF VIA AN ONSITE SEWER SYSTEM CONNECTED TO A MUNICIPAL SEWER SYSTEM.

7. CONTRACTOR SHALL KEEP SEDIMENTATION OFF OF EXISTING PAVEMENT.

LEGEND

735	PROPOSED CONTOURS
735	EXISTING CONTOURS
	INLET PROTECTION
	LIMITS OF DISTURBANCE
SF	SILT FENCE
	GEO WATTLE
	CONSTRUCTION ENTRANCE / EXIT

EROSION CONTROL CONSTRUCTION PLAN

		INSTALLATION	MAINTENANCE	REMOVAL
CE	CONSTRUCTION ENTRANCE	PRIOR TO STARTING CONSTRUCTION	INSPECTIONS SHALL BE MADE WEEKLY AND AFTER RAIN STORM EVENTS TO ENSURE THAT THE FACILITY IS FUNCTIONING PROPERLY. AGGREGATE PAD SHALL BE WASHED DOWN OR REPLACED WHEN SEDIMENT OR MUD HAS CLOGGED THE VOID SPACES BETWEEN THE STONES OR MUD IS BEING TRACKED ONTO THE PUBLIC ROADWAY. RUNOFF FROM WASHDOWN OPERATION SHALL BE FILTERED THROUGH ANOTHER B.M.P. PRIOR TO DRAINING OFF-SITE.	IMMEDIATELY AFTER PAVEMENT PLACEMENT
SF	SILT FENCE	PRIOR TO STARTING CONSTRUCTION	INSPECTIONS SHALL BE MADE WEEKLY AND AFTER RAIN STORM EVENTS. SEDIMENT SHALL BE REMOVED FROM BEHIND THE FENCE WHEN THE DEPTH OF SEDIMENT HAS BUILT UP TO ONE-THIRD THE HEIGHT OF THE FENCE ABOVE GRADE.	TO BE REMOVED AFTER PAVING IS COMPLETE AND GRASS COVER IS ESTABLISHED
IP	INLET PROTECTION	UPON INLET COMPLETION	INSPECTIONS SHALL BE MADE WEEKLY AND AFTER RAIN STORM EVENTS. SEDIMENT SHALL BE REMOVED FROM BEHIND THE FILTER FABRIC WHEN THE DEPTH OF SEDIMENT HAS BUILT UP TO ONE-THIRD THE HEIGHT OF THE INLET ABOVE GRADE. INSPECT FOR A 2 INCH GAP BETWEEN TOP OF FABRIC AND TOP OF INLET OPENING. INSPECT FOR GAPS BETWEEN THE PAVEMENT AND FILTER FABRIC.	TO BE REMOVED AFTER SITE GRADING AROUND EXIST INLET AND FINAL ACCEPTANCE.

No.	REVISIONS	DATE	BY

Kimley-Horn and Associates, Inc.
State of Texas Registration No. F-928
5750 GENESIS COURT, SUITE 200, FRISCO, TX 75034
PHONE: 972-335-3580 FAX: 972-335-3779
WWW.KIMLEY-HORN.COM

STATE OF TEXAS
ROY BRASWELL
104908
LICENSED
PROFESSIONAL ENGINEER
6/14/13

KHA PROJECT	063319038
DATE	06/14/2013
SCALE	AS SHOWN
DESIGNED BY	TBB
DRAWN BY	AAE
CHECKED BY	TBB

VILLAGE ON THE PARKWAY PHASE II
ADDISON, TEXAS

EROSION CONTROL PLAN

SHEET NUMBER
C-03

This document, together with the concepts and designs presented herein, as an instrument of service, is intended only for the specific purpose and client for which it was prepared. Reuse of and improper reliance on this document without written authorization and adaptation by Kimley-Horn and Associates, Inc. shall be without liability to Kimley-Horn and Associates, Inc.

PLOTTED BY LUCIO, RAMIRO 6/14/2013 1:24 PM
DWG NAME K:\FRI_CIVIL\063319038-VOP\DWG\PLAN SET PHASE II\C-03-ERO.DWG [C-03 EROSION CONTROL PLAN]
LAYOUT C-03 EROSION CONTROL PLAN

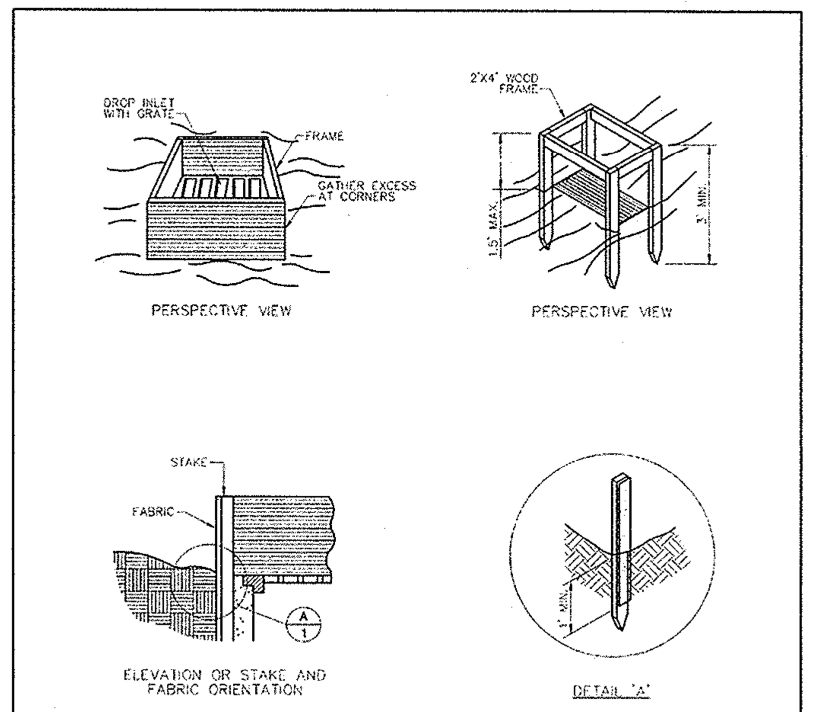

SPECIFIC APPLICATION
THIS METHOD OF INLET PROTECTION IS APPLICABLE WHERE THE INLET DRAINS A RELATIVELY FLAT AREA (SLOPE NO GREATER THAN 5%) WHERE THE INLET SHEET OR OVER-LAND FLOWS (NOT TO EXCEED 1 C.F.S.) ARE TYPICAL. THE METHOD SHALL NOT APPLY TO INLETS RECEIVING CONCENTRATED FLOWS SUCH AS IN STREETS OR HIGHWAY MEDIANS.

Addison! PUBLIC WORKS DEPARTMENT | GRATE AND WYE INLET PROTECTION | STANDARD CONSTRUCTION DETAILS EROSION CONTROL | DATE: AUGUST, 2010 | REV DATE: - | SHEET: SD-EC04

EROSION CONTROL PLAN NOTES

1. ALL OPERATORS AND/OR CONTRACTORS SHALL CONFORM TO THE TERMS AND CONDITIONS OF THE TEXAS COMMISSION ON ENVIRONMENTAL QUALITY (TCEQ), TPDES GENERAL PERMIT NO. TXR 150000 ISSUED AND DATED MARCH 5, 2003.
2. THE NOTICE OF INTENT (NOI), AS REQUIRED BY THE GENERAL PERMIT, MUST BE PROPERLY DISPLAYED ON SITE AT ALL TIMES BY EACH OPERATOR.
3. ALL RELEASES OF THE REPORTABLE QUANTITIES OF HAZARDOUS SUBSTANCES SHALL BE REPORTED IMMEDIATELY TO THE FACILITY OPERATOR, EPA AND TCEQ.
4. QUALIFIED OPERATOR PERSONNEL MUST INSPECT THE SITE AT LEAST ONCE EVERY 14 DAYS AND WITHIN 24 HOURS OF A STORM EVENT OF 0.5 INCHES OR GREATER. AS AN ALTERNATIVE, AN INSPECTION CAN BE CONDUCTED ONCE EVERY SEVEN (7) CALENDAR DAYS ON A DEFINED DAY. A DECISION ON WHICH METHOD TO USE MUST BE DECIDED BEFORE WORK BEGINS AND MUST BE FOLLOWED THROUGHOUT THE PROJECT.
5. MODIFICATIONS TO THE STORM WATER POLLUTION PREVENTION PLAN SHALL BE IMPLEMENTED AND BE IN-PLACE WITHIN A SEVEN CALENDAR DAY PERIOD.
6. IF ANY CONTRACTOR SEES A VIOLATION BY AN OPERATOR OR ANOTHER CONTRACTOR, THAT OPERATOR OR CONTRACTOR IN VIOLATION SHALL BE NOTIFIED AS WELL AS THE FACILITY OPERATOR.
7. EROSION CONTROL SHALL BE INSTALLED PRIOR TO GRADING.
8. ACCUMULATED SILT DEPOSITS SHALL BE REMOVED FROM SILT FENCES AND HAY BALE DIKES WHEN SILT DEPTH REACHES THREE INCHES OR 25%.
9. THE CONTRACTOR SHALL ADD OR DELETE EROSION PROTECTION AT THE REQUEST AND DIRECTION OF THE OPERATOR OR TOWN.
10. AFTER INSTALLATION OF PAVEMENT, FINAL LOT BENCHING AND GENERAL CLEANUP, THE CONTRACTOR SHALL ESTABLISH GRASS GROUNDCOVER IN ALL STREET PARKWAYS, LOT AND ALL OTHER DISTURBED AREAS. SODDING SHALL BE DONE AS SPECIFIED BY SECTION 202.5 AND SEEDING AS SPECIFIED BY SECTION 202.6 OF THE OCTOBER 2004 OR LATEST EDITION OF NCTCOG STANDARD SPECIFICATION.
11. IT SHALL BE THE CONTRACTOR'S RESPONSIBILITY TO CONTROL AND LIMIT SILT AND SEDIMENT LEAVING THE SITE. SPECIFICALLY, THE CONTRACTOR SHALL PROTECT ALL PUBLIC STREETS, ALLEYS, STREAMS AND STORM DRAINAGE SYSTEMS FROM EROSION DEPOSITS.
12. A DRAINAGE AREA MAP WILL BE INCLUDED WITH THE EROSION CONTROL PLAN.
13. CONSTRUCTION WASTE DISPOSAL CONTAINERS SHALL BE PROVIDED ON THE SITE FOR DISPOSAL OF ALL NON-HAZARDOUS CONSTRUCTION WASTE MATERIALS. THE CONTAINERS SHALL BE HAULED TO LANDFILL BY THE CONTRACTOR.
14. ALL HAZARDOUS MATERIALS SHALL BE HANDLED AND DISPOSED OF BY THE CONTRACTOR IN ACCORDANCE WITH FEDERAL, STATE AND LOCAL REGULATIONS.

SILT FENCE NOTES

1. POSTS WHICH SUPPORT THE SILT FENCE SHALL BE INSTALLED ON A SLIGHT ANGLE TOWARD THE ANTICIPATED RUNOFF SOURCE. THE POST MUST BE EMBEDDED A MINIMUM OF 18 INCHES.
2. THE TOE OF THE SILT FENCE SHALL BE TRENCHED IN WITH A SPADE OR MECHANICAL TRENCHER, SO THAT THE DOWNSLOPE FACE OF THE TRENCH IS FLAT AND PERPENDICULAR TO THE LINE OF FLOW. WHERE FENCE CANNOT BE TRENCHED IN (E.G. PAVEMENT), WEIGHT FABRIC FLAP WITH WASHED GRAVEL ON THE UPHILL SIDE TO PREVENT FLOW UNDER FENCE.
3. THE TRENCH MUST BE A MINIMUM OF 6 INCHES DEEP AND 6 INCHES WIDE TO ALLOW FOR THE SILT FENCE FABRIC TO BE LAID IN THE GROUND AND BACKFILLED WITH COMPACTED MATERIAL.
4. SILT FENCE SHALL BE SECURELY FASTENED TO EACH SUPPORT POST OR TO WOVEN WIRE, WHICH IS IN TURN ATTACHED TO THE SUPPORT POST. THERE SHALL BE A 6 INCH DOUBLE OVERLAP, SECURELY FASTENED WHERE ENDS OF FABRIC MEET.
5. INSPECTION SHALL BE MADE EVERY TWO WEEKS OR AFTER EACH RAINFALL. REPAIR OR REPLACEMENT SHALL BE PROMPTLY AS NEEDED.
6. SILT FENCE SHALL BE REMOVED WHEN THE SITE IS COMPLETELY STABILIZED SO AS NOT TO BLOCK OR IMPEDE STORM FLOW OR DRAINAGE.
7. ACCUMULATED SILT SHALL BE REMOVED WHEN IT REACHES A DEPTH OF 3 INCHES. THE SILT SHALL BE DISPOSED OF AT AN APPROVED SITE AND IN SUCH A MANNER AS TO NOT CONTRIBUTE TO ADDITIONAL SILTATION.

Addison! PUBLIC WORKS DEPARTMENT | EROSION CONTROL & SILT FENCE NOTES | STANDARD CONSTRUCTION DETAILS EROSION CONTROL | DATE: AUGUST, 2010 | REV DATE: - | SHEET: SD-EC01

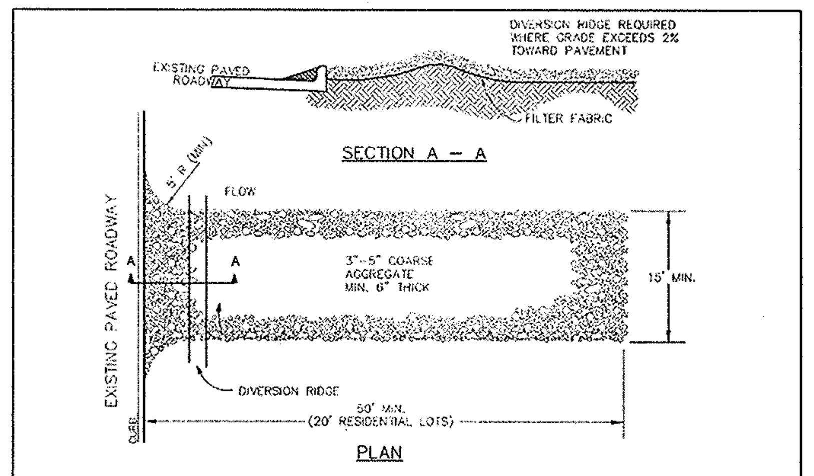

TEMPORARY STONE CONSTRUCTION ENTRANCE/EXIT
N.T.S.

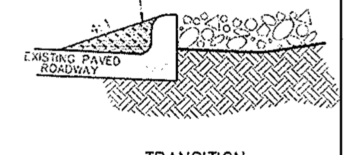

TRANSITION

STABILIZED CONSTRUCTION ENTRANCE GENERAL NOTES:
1. WHEN NECESSARY, VEHICLES SHALL BE CLEANED TO REMOVE SEDIMENT PRIOR TO ENTRANCE ONTO A PUBLIC ROADWAY. WHEN WASHING IS REQUIRED, IT SHALL BE DONE ON AREA STABILIZED WITH CRUSHED STONE WITH DRAINAGE FLOWING AWAY FROM BOTH THE STREET AND THE STABILIZED ENTRANCE. ALL SEDIMENT SHALL BE PREVENTED FROM ENTERING ANY STORM DRAIN, DITCH OR WATERCOURSE USING APPROVED METHODS.
2. THE ENTRANCE SHALL BE MAINTAINED IN A CONDITION WHICH WILL PREVENT TRACKING OR FLOWING OF SEDIMENT ONTO PAVED SURFACES. THIS MAY REQUIRE PERIODIC TOP DRESSING WITH ADDITIONAL STONE AS CONDITIONS DEMAND. ALL SEDIMENT SPILLED, DROPPED, WASHED, OR TRACKED ONTO PAVED SURFACES MUST BE REMOVED IMMEDIATELY.
3. THE ENTRANCE MUST BE PROPERLY GRADED OR INCORPORATE A DRAINAGE SWALE TO PREVENT RUNOFF FROM LEAVING THE CONSTRUCTION SITE.
4. WHEN SEDIMENT HAS SUBSTANTIALLY CLOGGED THE VOID AREA BETWEEN THE ROCKS, THE AGGREGATE MAT MUST BE WASHED DOWN OR REPLACED. PERIODIC RE-GRADING AND TOP DRESSING WITH ADDITIONAL STONE MUST BE DONE TO KEEP THE EFFICIENCY OF THE ENTRANCE FROM DIMINISHING.

Addison! PUBLIC WORKS DEPARTMENT | TEMPORARY STONE CONSTRUCTION ENTRANCE/EXIT | STANDARD CONSTRUCTION DETAILS EROSION CONTROL | DATE: AUGUST, 2010 | REV DATE: - | SHEET: SD-EC03

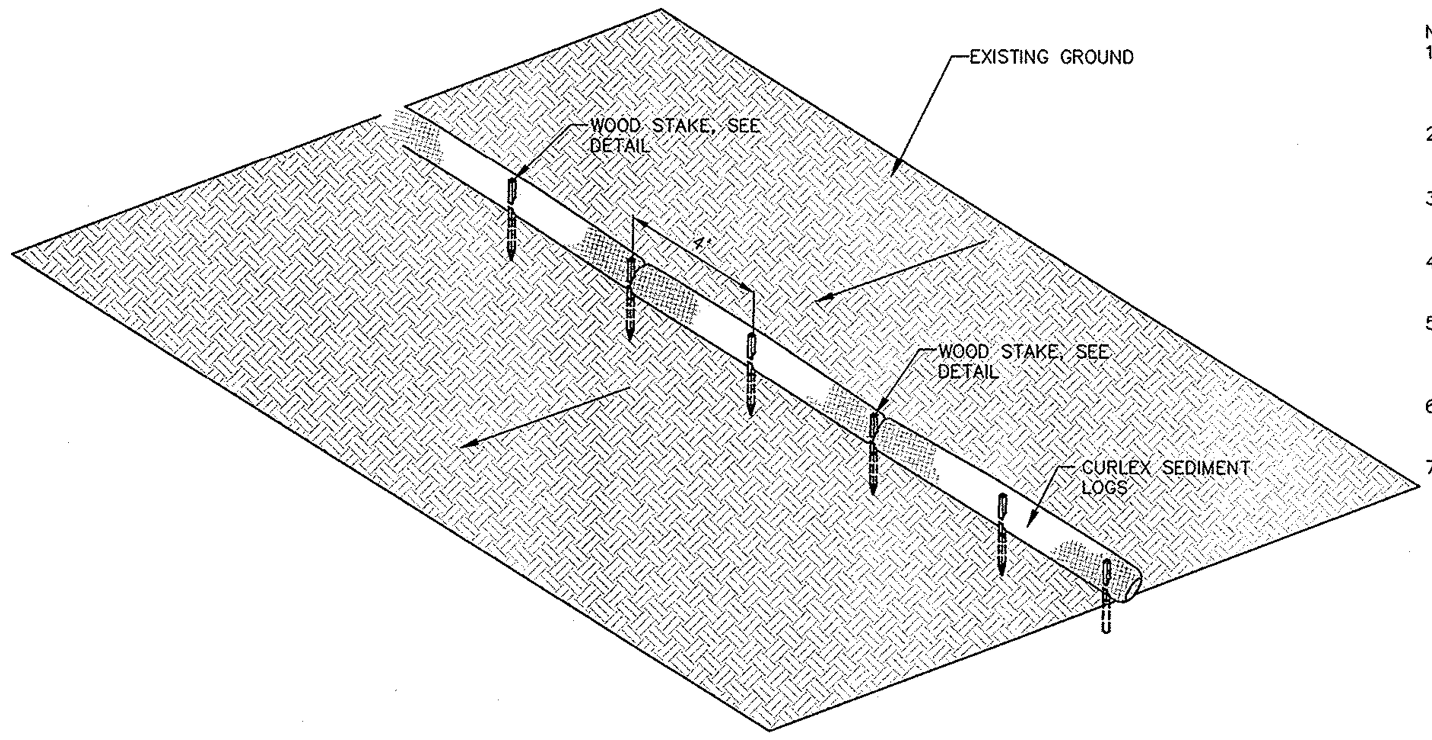

NOTES:
1. SEDIMENT LOGS AND STAKES PER AMERICAN EXCELSIOR COMPANY, OR APPROVED EQUAL.
2. USE RICE STRAW SOCK TO CONTOUR SLOPE IN 2" TO 3" TRENCH.
3. PLACE WOODEN STAKES EVERY 4' LEAVING 2" OF STAKE ABOVE WATTLE.
4. PACK SOIL AGAINST WATTLE ON UPHILL SIDE.
5. IF CONTINUOUS ROWS ARE NEEDED, FIRMLY BUTT WATTLES AGAINST EACH OTHER. DO NOT OVERLAP WATTLES.
6. PLACE WATTLES 10' TO 15' APART ON SLOPES.
7. ON SLOPES, STAKES SHOULD BE DRIVEN IN AT AN ANGLE TOWARDS THE UPHILL SIDE.

ISOMETRIC PLAN VIEW

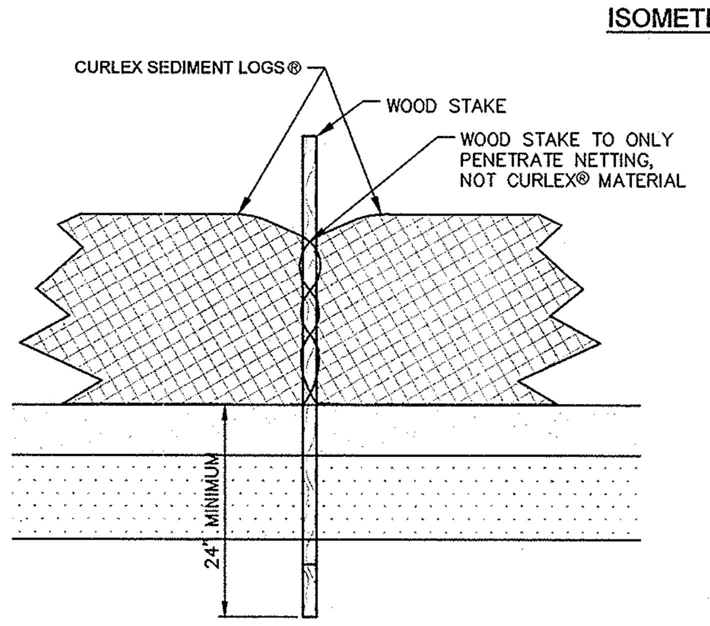

STAKE DETAIL (FRONT VIEW)

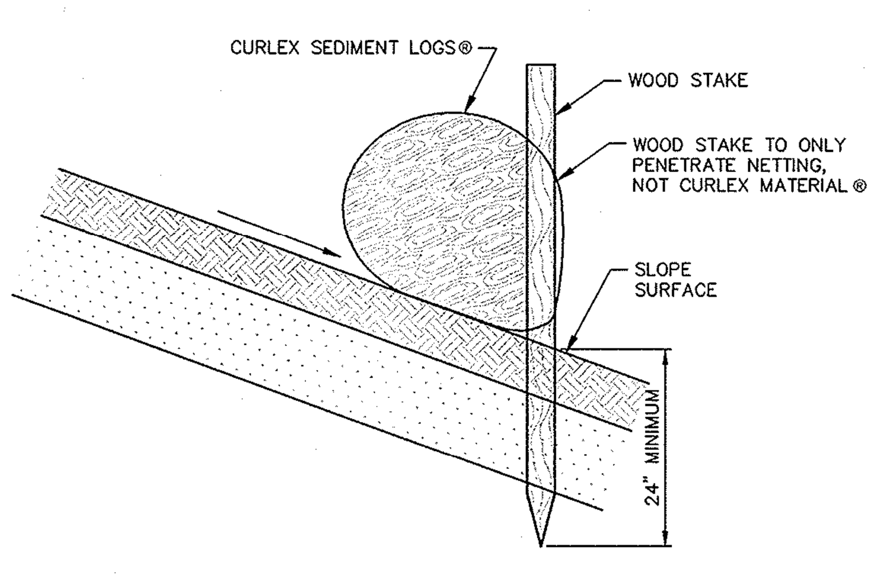

STAKE DETAILS (ON BARE SOIL)

GEO WATTLE

N.T.S.

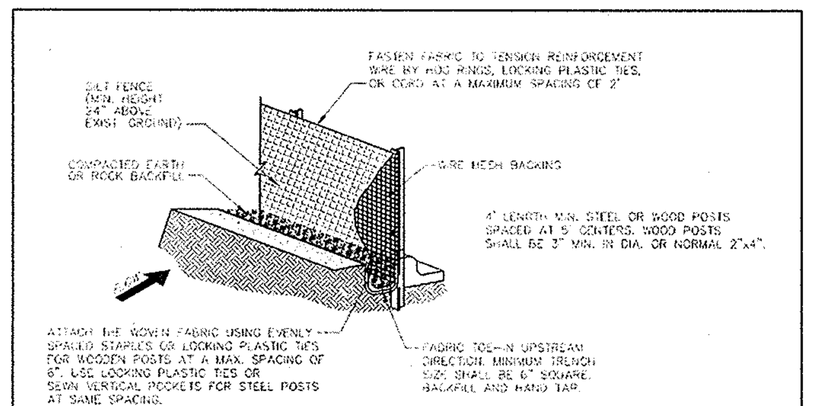

ISOMETRIC PLAN VIEW
N.T.S.

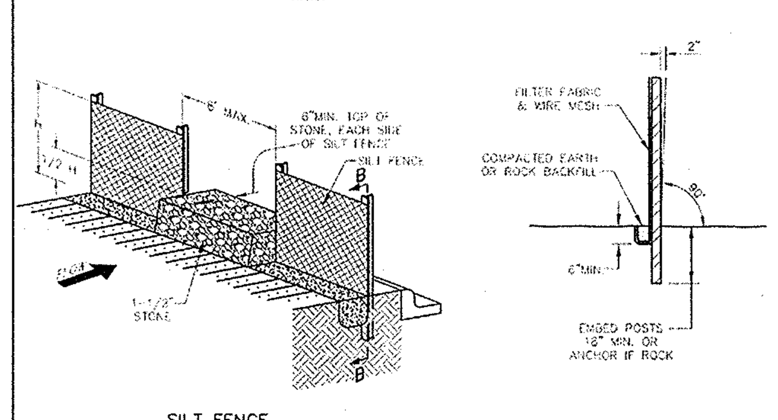

SILT FENCE
STONE OVERFLOW STRUCTURE
N.T.S.

Addison! PUBLIC WORKS DEPARTMENT | SILT FENCE DETAIL | STANDARD CONSTRUCTION DETAILS EROSION CONTROL | DATE: AUGUST, 2010 | REV DATE: - | SHEET: SD-EC02

GENERAL NOTES

1. THE OWNER AND CONTRACTOR SHALL EACH SUBMIT A CONSTRUCTION SITE NOTICE (TXR 150000 FORM) TO THE CITY OF FRISCO AT LEAST 48 HOURS PRIOR TO COMMENCING CONSTRUCTION ACTIVITIES. OWNER AND CONTRACTOR ARE RESPONSIBLE FOR RETAINING PROOF THAT THE FORM WAS SUBMITTED TO THE CITY (PROOF MUST CONSIST OF CERTIFIED MAIL WITH RETURN RECEIPT).

2. TEXAS POLLUTANT DISCHARGE ELIMINATION SYSTEM (TPDES) CONSTRUCTION GENERAL PERMIT TXR150000, LANDSCAPE PLANS, GEOTECHNICAL INVESTIGATION (IF PREPARED), CIVIL ENGINEERING PLANS AND ALL APPLICABLE SPECIFICATIONS ARE HEREBY INCORPORATED INTO THIS SWPPP. CONTRACTOR SHALL OBTAIN AND KEEP A CURRENT COPY OF THESE DOCUMENTS AT THE CONSTRUCTION SITE.

3. ALL EROSION AND SEDIMENTATION CONTROLS MUST BE DESIGNED, INSTALLED AND MAINTAINED TO RETAIN SEDIMENT ON-SITE TO THE EXTENT PRACTICABLE.

4. ALL CONTROL MEASURES MUST BE SELECTED, INSTALLED, AND MAINTAINED IN ACCORDANCE WITH MANUFACTURERS SPECIFICATIONS AND GOOD ENGINEERING PRACTICES.

5. OFF-SITE ACCUMULATIONS OF SEDIMENT ESCAPING PROJECT SITE MUST BE REMOVED AT A FREQUENCY NECESSARY TO MINIMIZE OFF-SITE IMPACTS. FOR EXAMPLE, SEDIMENTATION WITHIN STREETS ADJACENT TO THE PROJECT SITE MUST BE REMOVED PRIOR TO RAINFALL EVENTS. ALL FINES IMPOSED FOR TRACKING ONTO PUBLIC ROADS SHALL BE PAID BY THE CONTRACTOR. IN ANY EVENT SILT SHALL ALWAYS BE REMOVED SUCH THAT PONDING IN A STREET IS PREVENTED.

6. CONTRACTOR MUST REMOVE SEDIMENT FROM ALL APPLICABLE CONTROLS WHEN DESIGN SILT STORAGE CAPACITY HAS BEEN REDUCED BY 50%.

7. CONTRACTOR SHALL ENSURE THAT ALL LITTER, CONSTRUCTION DEBRIS, AND CONSTRUCTION CHEMICALS ARE PREVENTED FROM BECOMING POLLUTANT SOURCES.

8. OFF-SITE MATERIAL STORAGE AREAS USED SOLELY FOR THIS PROJECT, INCLUDING DIRT STOCKPILES AND BORROW AREAS (AS APPLICABLE), MUST BE PREVENTED FROM BECOMING POLLUTANT SOURCES BY INSTALLATION OF BMP'S.

9. CONTRACTOR SHALL ENSURE THAT EXISTING VEGETATION IS PRESERVED WHERE ATTAINABLE.

10. DISTURBED PORTIONS OF SITE MUST BE STABILIZED. STABILIZATION PRACTICES MUST BE INITIATED WITHIN 14 DAYS IN PORTIONS OF THE SITE WHERE CONSTRUCTION HAS BEEN EITHER TEMPORARILY OR PERMANENTLY CEASED, UNLESS EXCEPTED WITHIN THE TPDES PERMIT.

11. CONTRACTOR MUST MAINTAIN RECORDS OF DATES IN THE SWPPP OF WHEN MAJOR GRADING ACTIVITIES OCCUR, WHEN CONSTRUCTION ACTIVITIES EITHER TEMPORARILY OR PERMANENTLY CEASE ON A PORTION OF THE SITE, AND WHEN STABILIZATION MEASURES ARE INITIATED.

12. CONTRACTOR SHALL ENSURE THAT SWPPP IS CONSISTENT WITH SEDIMENT AND EROSION SITE PLANS, STORM WATER PERMITS, AND STORM WATER MANAGEMENT PLANS APPROVED BY STATE, TRIBAL, OR LOCAL OFFICIALS. UPDATES TO SWPPP ARE REQUIRED UPON WRITTEN NOTICE TO PERMITTEE OF CHANGES APPLICABLE TO STORM WATER PERMITS, SEDIMENT AND EROSION CONTROL PLANS, OR STORM WATER MANAGEMENT PLANS BY SUCH OFFICIALS.

13. ALL EROSION AND SEDIMENTATION CONTROL MEASURES AND ANY OTHER PROTECTIVE MEASURES IDENTIFIED IN THE SWPPP MUST BE MAINTAINED IN EFFECTIVE OPERATING CONDITION. WHEN INSPECTIONS IDENTIFY CONTROLS OPERATING INEFFECTIVELY, THE CONTROLS SHALL BE MAINTAINED PRIOR TO THE NEXT RAINFALL EVENT OR AS NECESSARY TO MAINTAIN EFFECTIVENESS OF THE CONTROL, OR AS SOON AS PRACTICABLE.

14. CONTRACTOR SHALL INSPECT DISTURBED AREAS, MATERIAL STORAGE AREAS EXPOSED TO PRECIPITATION, STRUCTURAL CONTROL MEASURES, AND VEHICLE ENTRY AND EXIT AREAS AT LEAST ONCE EVERY 14 CALENDAR DAYS AND WITHIN 24 HOURS OF A STORM EVENT OF 0.5 INCHES OR GREATER.

15. CONTRACTOR SHALL INSPECT STABILIZED AREAS AND AREAS WHERE RUNOFF IS UNLIKELY DUE TO FROZEN OR ARID WEATHER CONDITIONS AT LEAST ONCE PER MONTH.

16. CONTRACTOR SHALL INSPECT ACCESSIBLE DISCHARGE LOCATIONS (OR NEARBY DOWNSTREAM LOCATIONS IF DISCHARGE POINT IS NOT ACCESSIBLE) IN ORDER TO ASCERTAIN WHETHER OR NOT EROSION CONTROL MEASURES ARE EFFECTIVE IN PREVENTING SIGNIFICANT IMPACTS TO RECEIVING WATERS.

17. STRUCTURAL BMP'S SHOULD NOT, TO THE DEGREE ATTAINABLE, BE PLACED WITHIN FLOODPLAINS.

18. BASED ON INSPECTION RESULTS, REVISIONS TO SWPPP MUST BE MADE WITHIN 7 CALENDAR DAYS OF THE INSPECTION. NEW OR MODIFIED CONTROL MEASURES MUST BE INSTALLED PRIOR TO THE NEXT RAINFALL EVENT, OR AS SOON AS PRACTICABLE.

19. REPORTS SUMMARIZING THE SCOPE OF ALL INSPECTIONS, INCLUDING NAME AND QUALIFICATIONS OF INSPECTOR, DATE OF INSPECTION, AND MAJOR OBSERVATIONS RELATING TO THE IMPLEMENTATION OF THE SWPPP (INCLUDING LOCATION OF DISCHARGES OF SEDIMENT OR OTHER POLLUTANTS, LOCATION OF CONTROLS THAT NEED TO BE MAINTAINED, LOCATIONS WHERE CONTROLS ARE INADEQUATE OR ARE OPERATING IMPROPERLY, AND LOCATIONS WHERE ADDITIONAL CONTROLS ARE NEEDED) MUST BE SIGNED BY THE INSPECTOR PER 30 TEXAS ADMINISTRATIVE CODE (TAC) SECTION 305.128, AND RETAINED WITHIN THE SWPPP FOR AT LEAST 3 YEARS FROM THE DATE THE SITE IS FINALLY STABILIZED. REPORTS THAT DO NOT IDENTIFY INCIDENTS OF NON-COMPLIANCE SHALL CONTAIN A CERTIFICATION STATING THAT THE SITE IS IN COMPLIANCE WITH THE SWPPP AND THE GENERAL PERMIT. THE CONTRACTOR SHALL CERTIFY AS FOLLOWS:

"I CERTIFY UNDER PENALTY OF LAW THAT THIS DOCUMENT AND ALL ATTACHMENTS WERE PREPARED UNDER MY DIRECTION OR SUPERVISION IN ACCORDANCE WITH A SYSTEM DESIGNED TO ASSURE THAT QUALIFIED PERSONNEL PROPERLY GATHERED AND EVALUATED THE INFORMATION SUBMITTED. BASED ON MY INQUIRY OF THE PERSON OR PERSONS WHO MANAGE THE SYSTEM, OR THOSE PERSONS DIRECTLY RESPONSIBLE FOR GATHERING THE INFORMATION, THE INFORMATION SUBMITTED IS, TO THE BEST OF MY KNOWLEDGE AND BELIEF, TRUE, ACCURATE, AND COMPLETE. I AM AWARE THAT THERE ARE SIGNIFICANT PENALTIES FOR SUBMITTING FALSE INFORMATION, INCLUDING THE POSSIBILITY OF FINE AND IMPRISONMENT FOR KNOWING VIOLATIONS."

20. CONTRACTOR SHALL IDENTIFY ALL SOURCES OF ALLOWABLE NON-STORM WATER THAT WILL BE COMBINED WITH STORM WATER AT THE SITE (EXCEPT FIRE-FIGHTING ACTIVITIES) AND ENSURE IMPLEMENTATION OF APPROPRIATE POLLUTION PREVENTION MEASURES FOR NON-STORM WATER COMPONENT(S) OF DISCHARGE.

21. CONTRACTOR SHALL ENSURE THAT THE INDIVIDUAL SIGNING THE SWPPP MAKES THE CERTIFICATION UNDER PART VI.G.2.d OF THE GENERAL PERMIT. THIS CERTIFICATION MUST APPEAR WITHIN THE SWPPP.

"I CERTIFY UNDER PENALTY OF LAW THAT THIS DOCUMENT AND ALL ATTACHMENTS WERE PREPARED UNDER MY DIRECTION OR SUPERVISION IN ACCORDANCE WITH A SYSTEM DESIGNED TO ASSURE THAT QUALIFIED PERSONNEL PROPERLY GATHERED AND EVALUATED THE INFORMATION SUBMITTED. BASED ON MY INQUIRY OF THE PERSON OR PERSONS WHO MANAGE THE SYSTEM, OR THOSE PERSONS DIRECTLY RESPONSIBLE FOR GATHERING THE INFORMATION, THE INFORMATION SUBMITTED IS, TO THE BEST OF MY KNOWLEDGE AND BELIEF, TRUE, ACCURATE, AND COMPLETE. I AM AWARE THAT THERE ARE SIGNIFICANT PENALTIES FOR SUBMITTING FALSE INFORMATION, INCLUDING THE POSSIBILITY OF FINE AND IMPRISONMENT FOR KNOWING VIOLATIONS."

CONTRACTOR ITEMS (SIGNATURE BLOCKS, ETC.)

1. CONTRACTOR MUST DESCRIBE BELOW ALL WASTE DISPOSAL PRACTICES AND ENSURE THAT NO SOLID MATERIALS INCLUDING BUILDING MATERIALS ARE DISCHARGED INTO WATERS OF THE UNITED STATES UNLESS AUTHORIZED BY PERMIT ISSUED UNDER CWA SECTION 402 AND 404.

WASTE DISPOSAL PRACTICES:

2. ALL CONTRACTORS AND SUBCONTRACTORS PROVIDING SERVICES RELATING TO THE SWPPP AND THE OWNER MUST SIGN A CERTIFICATION STATEMENT ACKNOWLEDGING THEIR RESPONSIBILITIES AS SPECIFIED IN THE SWPPP. CONTRACTOR, SUBCONTRACTOR, AND OWNER SHALL SIGN THE BELOW CERTIFICATE OR SHALL PREPARE SEPARATE CERTIFICATE OR STATEMENTS INCLUDING THE BELOW CERTIFICATION LANGUAGE.

CONTRACTOR SHALL ENSURE THE SWPPP IS SIGNED BY A RESPONSIBLE CORPORATE OFFICER (FOR A CORPORATION), GENERAL PARTNER OR PROPRIETOR (FOR PARTNERSHIP OF SOLE PROPRIETORSHIP), PRINCIPAL EXECUTIVE OFFICER OR RANKING ELECTED OFFICIAL (FOR MUNICIPALITY), OR BY A DULY AUTHORIZED REPRESENTATIVE OF THE ABOVE (EITHER A NAMED INDIVIDUAL OR ANY INDIVIDUAL OCCUPYING A NAMED POSITION). SIGNING INDIVIDUAL MUST INCLUDE THEIR TITLE AND QUALIFICATIONS ON THE SWPPP SIGNATURE BLOCK. THE SIGNED SWPPP MUST BE POSTED ON THE SITE PRIOR TO COMMENCING CONSTRUCTION.

"I CERTIFY THAT NO SOLID MATERIALS, INCLUDING BUILDING MATERIALS, ARE DISCHARGED INTO WATERS OF THE UNITED STATES".

"I CERTIFY UNDER PENALTY OF LAW THAT THIS DOCUMENT AND ALL ATTACHMENTS WERE PREPARED UNDER MY DIRECTION OR SUPERVISION IN ACCORDANCE WITH A SYSTEM DESIGNED TO ASSURE THAT QUALIFIED PERSONNEL PROPERLY GATHERED AND EVALUATED THE INFORMATION SUBMITTED. BASED ON MY INQUIRY OF THE PERSON OR PERSONS WHO MANAGE THE SYSTEM, OR THOSE PERSONS DIRECTLY RESPONSIBLE FOR GATHERING THE INFORMATION, THE INFORMATION SUBMITTED IS, TO THE BEST OF MY KNOWLEDGE AND BELIEF, TRUE, ACCURATE, AND COMPLETE. I AM AWARE THAT THERE ARE SIGNIFICANT PENALTIES FOR SUBMITTING FALSE INFORMATION, INCLUDING THE POSSIBILITY OF FINE AND IMPRISONMENT FOR KNOWING VIOLATIONS."

3. STABILIZED CONSTRUCTION ENTRANCE(S) ARE INTENDED TO MINIMIZE OFF-SITE SEDIMENT TRACKING. CONTRACTOR TO INDICATE MEASURES TO MINIMIZE DUST GENERATION BELOW:

4. CONTRACTOR MUST DESCRIBE CONSTRUCTION AND WASTE MATERIALS EXPECTED TO BE STORED ON-SITE AND MUST DISCUSS ALL CONTROLS IMPLEMENTED TO REDUCE POLLUTANTS FROM THESE MATERIALS, INCLUDING STORAGE PRACTICES AND SPILL PREVENTION AND RESPONSE MEASURES.

CURRENT LISTING OF CONSTRUCTION AND WASTE MATERIALS, AND CONTROLS IMPLEMENTED TO REDUCE POLLUTANTS (UPDATE AS NECESSARY):

"I CERTIFY THAT THE LISTING ABOVE IS CURRENT AND MEETS THE REQUIREMENTS OF THE REGION 6 NPDES CONSTRUCTION GENERAL PERMIT, SECTION IV.D.2c.(4)

5. CONTRACTOR MUST DESCRIBE CONTROLS AND MEASURES TO MINIMIZE POLLUTANT DISCHARGES FROM AREAS OTHER THAN CONSTRUCTION, INCLUDING DEDICATED ASPHALT AND CONCRETE PLANTS. STORM WATER DISCHARGE ASSOCIATED WITH INDUSTRIAL ACTIVITIES, OTHER THAN CONSTRUCTION ACTIVITIES, ARE NOT ANTICIPATED ON THIS SITE.

LISTING OF CONTROLS AND MEASURES FROM AREAS OTHER THAN CONSTRUCTION:

"I CERTIFY UNDER PENALTY OF LAW THAT THIS DOCUMENT AND ALL ATTACHMENTS WERE PREPARED UNDER MY DIRECTION OR SUPERVISION IN ACCORDANCE WITH A SYSTEM DESIGNED TO ASSURE THAT QUALIFIED PERSONNEL PROPERLY GATHERED AND EVALUATED THE INFORMATION SUBMITTED. BASED ON MY INQUIRY OF THE PERSON OR PERSONS WHO MANAGE THE SYSTEM, OR THOSE PERSONS DIRECTLY RESPONSIBLE FOR GATHERING THE INFORMATION, THE INFORMATION SUBMITTED IS, TO THE BEST OF MY KNOWLEDGE AND BELIEF, TRUE, ACCURATE, AND COMPLETE. I AM AWARE THAT THERE ARE SIGNIFICANT PENALTIES FOR SUBMITTING FALSE INFORMATION, INCLUDING THE POSSIBILITY OF FINE AND IMPRISONMENT FOR KNOWING VIOLATIONS."

6. CONTRACTOR SHALL DESCRIBE AND RECORD AND DOCUMENT BELOW OR IN A SEPARATE LOG, OR ON THE SITE MAP, THE GENERAL SEQUENCE OF THE SOIL DISTURBING ACTIVITIES ON THE SITE AND THE DATES WHEN STABILIZATION MEASURES ARE INITIATED. THE SEPARATE LOG IS INCLUDED AS PART OF THE SWPPP. SEPARATE DOCUMENTATION, IF USED, SHALL INCLUDE THE BELOW CERTIFICATION LANGUAGE.

"I CERTIFY UNDER PENALTY OF LAW THAT THIS DOCUMENT AND ALL ATTACHMENTS WERE PREPARED UNDER MY DIRECTION OR SUPERVISION IN ACCORDANCE WITH A SYSTEM DESIGNED TO ASSURE THAT QUALIFIED PERSONNEL PROPERLY GATHERED AND EVALUATED THE INFORMATION SUBMITTED. BASED ON MY INQUIRY OF THE PERSON OR PERSONS WHO MANAGE THE SYSTEM, OR THOSE PERSONS DIRECTLY RESPONSIBLE FOR GATHERING THE INFORMATION, THE INFORMATION SUBMITTED IS, TO THE BEST OF MY KNOWLEDGE AND BELIEF, TRUE, ACCURATE, AND COMPLETE. I AM AWARE THAT THERE ARE SIGNIFICANT PENALTIES FOR SUBMITTING FALSE INFORMATION, INCLUDING THE POSSIBILITY OF FINE AND IMPRISONMENT FOR KNOWING VIOLATIONS."

VEGETATIVE STABILIZATION REQUIREMENTS

TEMPORARY SEEDING

ALL DISTURBED AREAS WHICH WILL BE LEFT DORMANT FOR GREATER THAN 14 DAYS SHALL BE SEEDED WITH FAST- GERMINATING TEMPORARY VEGETATION IMMEDIATELY FOLLOWING GRADING OPERATIONS. SELECTION OF THE SEED WILL DEPEND ON THE TIME OF YEAR IT IS APPLIED (SEE DESCRIPTIONS IN TABLE 2). REFERENCE LANDSCAPE PLAN FOR PERMANENT STABILIZATION REQUIREMENTS.

TABLE 2
VEGETATION TABLE*

TEMPORARY SEEDING

SPECIES	PLANTING RATE	PLANTING-DATES
CRIMSON CLOVER	7#/ACRE	8/15 - 11/30
MILLET, FOXTAIL	30#/ACRE	5/1 - 8/31
RYEGRASS, ANNUAL	30#/ACRE	8/15 - 9/30
SPRANGLETOP, GREEN	2.5#/ACRE	2/1 - 5/1
TALL FESCUE	7#-10#/1000 SF	9/1 - 10/15

*USE ONLY USDA CERTIFIED SEED.

SURFACE PREPARATION FOR TEMPORARY SEEDING

1. INSTALL EROSION STRUCTURES SUCH AS DIKES, DIVERSIONS, ETC. PRIOR TO SEEDING.

2. FURROW SLOPES STEEPER THAN 3:1 ON THE CONTOUR LINE BEFORE SEEDING.

3. ENSURE SEED BED IS PULVERIZED, LOOSE, AND UNIFORM.

APPLICATION

1. WHEN HYDROMULCHING IS USED, DO NOT MIX SEED AND FERTILIZER MORE THAN 30 MINUTES PRIOR TO APPLICATION.

2. APPLY SEED EVENLY USING PROPER EQUIPMENT AND WATER TO AID VEGETATION GROWTH.

3. EROSION CONTROL NETTING SHALL BE INSTALLED OVER FILL SLOPES WHICH HAVE BEEN BROUGHT TO FINAL GRADE AND HAVE BEEN SEEDED TO PROTECT AGAINST EROSION. MULCH (STRAW OR FIBER) SHALL BE USED ON RELATIVELY FLAT SLOPES.

RECORD DRAWINGS (October 2013)
Information Provided By:
BOB MOORE CONSTRUCTION

STOP!
CALL BEFORE YOU DIG
DIG TESS
1-800-DIG-TESS
(at least 72 hours prior to digging)

REFER TO SHEET C-03 FOR EROSION CONTROL PLAN, GENERAL EROSION AND ADDITIONAL SEDIMENTATION CONTROL NOTES AND BMP MAINTENANCE NOTES.

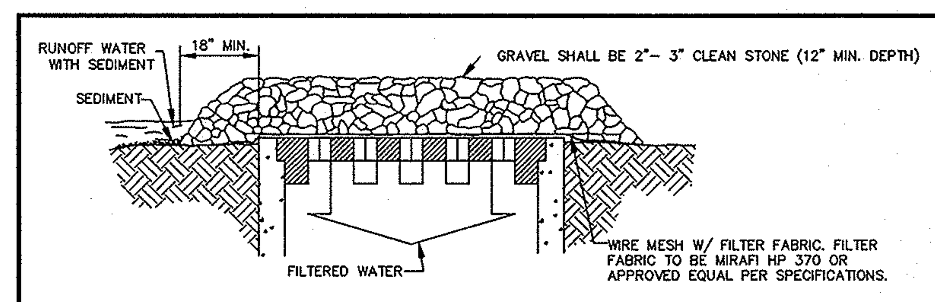

NOTE: THIS METHOD OF INLET PROTECTION IS APPLICABLE WHERE HEAVY CONCENTRATED FLOWS ARE EXPECTED, BUT NOT WHERE PONDING AROUND THE STRUCTURE MIGHT CAUSE EXCESSIVE INCONVENIENCE OR DAMAGE TO ADJACENT STRUCTURES AND UNPROTECTED ACRES.

GRAVEL AND WIRE MESH INLET SEDIMENT FILTER
N.T.S.

No.	REVISIONS	DATE	BY

Kimley-Horn and Associates, Inc.
State of Texas Registration No. F-928
5750 GENESIS COURT, SUITE 200, FRISCO, TX 75034
PHONE: 972-335-3580 FAX: 972-335-3779
WWW.KIMLEY-HORN.COM

STATE OF TEXAS
ROY BRASWELL
104908
LICENSED PROFESSIONAL ENGINEER
6/14/13

KHA PROJECT 063319038
DATE 06/14/2013
SCALE AS SHOWN
DESIGNED BY TBB
DRAWN BY AAE
CHECKED BY TBB

VILLAGE ON THE PARKWAY PHASE II
ADDISON, TEXAS

EROSION CONTROL DETAILS

SHEET NUMBER
C-04

This document, together with the concepts and designs presented herein, as an instrument of service, is intended only for the specific purpose and client for which it was prepared. Reuse of and improper reliance on this document without written authorization and adaptation by Kimley-Horn and Associates, Inc. shall be without liability to Kimley-Horn and Associates, Inc.

PLOTTED BY LUCIO, RAMIRO 6/14/2013 1:24 PM
DWG NAME K:\FRI_CIVIL\63319038-VOP\DWG\PLAN SET PHASE II\C-04-ERO-DET.DWG [C-04 EROSION CONTROL DETAILS]
LAST SAVED 6/14/2013 1:01 PM

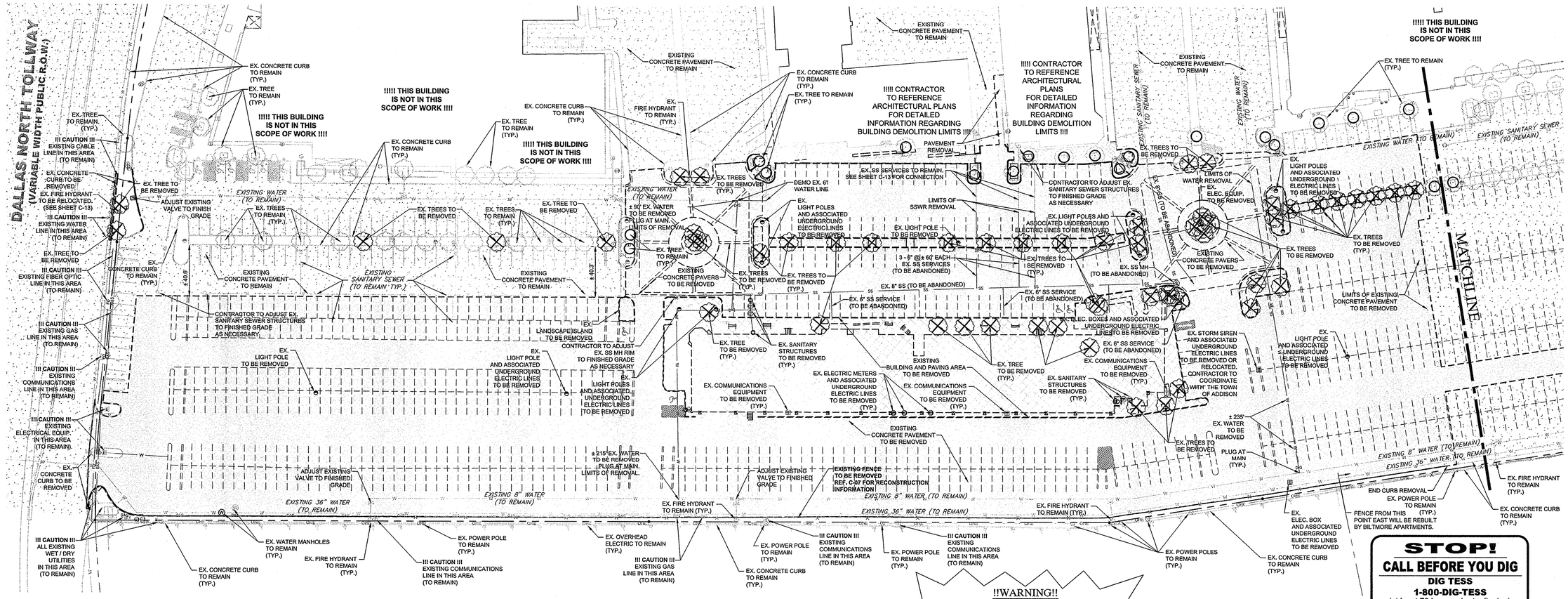

NOTE

KIMLEY-HORN AND ASSOCIATES, INC. IS NOT RESPONSIBLE FOR THE MEANS AND METHODS EMPLOYED BY THE CONTRACTOR TO IMPLEMENT THIS DEMOLITION PLAN. THIS DEMOLITION PLAN SIMPLY INDICATES THE KNOWN OBJECTS ON THE SUBJECT TRACTS THAT ARE TO BE DEMOLISHED AND REMOVED FROM THE SITE. KIMLEY-HORN AND ASSOCIATES, INC. DOES NOT WARRANT OR REPRESENT THAT THE PLAN, WHICH WAS PREPARED BASED ON SURVEY AND UTILITY INFORMATION PROVIDED BY OTHERS, SHOWS ALL IMPROVEMENTS AND UTILITIES, AND THAT THE IMPROVEMENTS AND UTILITIES ARE SHOWN ACCURATELY. THE CONTRACTOR IS RESPONSIBLE FOR PERFORMING HIS OWN SITE RECONNAISSANCE TO SCOPE HIS WORK AND TO CONFIRM WITH THE OWNERS OF EXISTING IMPROVEMENTS AND UTILITIES THE ABILITY AND PROCESS FOR THE REMOVAL OF PROPOSED DEMOLITION. THE GOAL OF THE DEMOLITION IS TO LEAVE THE SITE IN A STATE SUITABLE FOR THE CONSTRUCTION OF THE PROPOSED IMPROVEMENTS. REMOVAL, RELOCATION, OR PRESERVATION OF EXISTING IMPROVEMENTS, UTILITIES, ETC. TO ACCOMPLISH THIS GOAL ARE THE RESPONSIBILITY OF THE CONTRACTOR.

CONTRACTOR SHALL COMPLY WITH ALL LOCAL, STATE, AND FEDERAL REGULATIONS REGARDING THE DEMOLITION OF OBJECTS ON THE SITE AND THE DISPOSAL OF THE DEMOLISHED MATERIALS OFF-SITE. IT IS THE CONTRACTOR'S SOLE RESPONSIBILITY TO REVIEW THE SITE, DETERMINE THE APPLICABLE REGULATIONS, RECEIVE THE REQUIRED PERMITS AND AUTHORIZATIONS, AND COMPLY.

RECORD DRAWINGS (October 2013)
Information Provided By:
BOB MOORE CONSTRUCTION

TREE PROTECTION NOTE

TREE PROTECTION NEEDS TO BE PLACED 3.0' OUTSIDE THE DRIP LINE OF TREES USING TEMPORARY CHAIN LINK FENCING.

!!WARNING!!

EXISTING UTILITIES IN THE AREA. CONTRACTOR SHALL FIELD VERIFY THE LOCATION OF ALL EXISTING UTILITIES WITH THE PROVIDER PRIOR TO START OF CONSTRUCTION AND SHALL IMMEDIATELY NOTIFY THE ENGINEER OF ANY CONFLICTS DISCOVERED. CONTRACTOR IS RESPONSIBLE FOR COORDINATING UTILITY RELOCATION WHERE NECESSARY AND PROTECTING EXISTING UTILITIES (SHOWN OR NOT SHOWN). IF ANY EXISTING UTILITIES ARE DAMAGED, THE CONTRACTOR SHALL REPLACE THEM AT THEIR OWN EXPENSE.

NOTES

1. EXISTING HYDRANTS REMOVED SHALL BE TAKEN TO THE ADDISON PUBLIC WORKS STORAGE YARD, 16801 WESTGROVE RD. FOR SALVAGE. NOT TO BE REUSED IN THIS PROJECT.

2. SALVAGED METERS SHALL BE RETURNED TO TOWN OF ADDISON PUBLIC WORKS.

3. CONTRACTOR TO PLUG THE SADDLE AT THE MAIN FOR DEMOLISHED SERVICES LESS THAN 2" AND INSTALL A BLIND FLANGE AT THE MAIN FOR DEMOLISHED SERVICES GREATER THAN 2". ABANDONED SANITARY SEWER SERVICES SHALL BE CAPPED.

4. TREE PROTECTION TO BE PLACED 3.0' OUTSIDE OF THE DRIPLINE OF TREES USING TEMPORARY CHAIN LINK FENCING.

5. CONTRACTOR TO COORDINATE WITH TOWN OF ADDISON UTILITIES TO VERIFY EX. VALVE PLACEMENT & OPERATION TO FACILITATE NECESSARY ISOLATIONS FOR DEMOLITION WORK

FRANCHISE CONTACTS

AT&T MARCUS NELSON 972-889-4109	ATMOS GARY DICKINSON 972-360-4428
ONCOR CHARLES THOMAS 817-355-7014	TIME WARNER CABLE DAVE CHENEY 214-320-7406

BENCHMARKS

BM 5 "⊠" SET ON NORTHWEST CORNER OF CONCRETE PAD FOR SWB TELEPHONE BOX, 15'± EAST OF NORTHBOUND DALLAS NORTH TOLLWAY ACCESS ROAD AND 1,450'± SOUTH OF BELT LINE ROAD.

ELEV=635.30

BM 6 "⊠" SET ON SOUTHEAST CORNER OF CURB INLET; 15'± WEST OF MONTFORT DRIVE AND 750'± SOUTH OF SAKOWITZ DRIVE.

ELEV=603.67

BM 9 "⊠" SET ON SOUTHEAST CORNER OF CURB INLET ON EAST SIDE OF DALLAS NORTH TOLLWAY ACCESS ROAD AND 300'± SOUTH OF BELT LINE ROAD.

ELEV=627.34

LEGEND

PROPERTY LINE	EXISTING POWER POLE
DEMOLITION LINE	EXISTING LIGHT POLE
EXISTING OVERHEAD POWER LINE	EXISTING FIRE HYDRANT
EXISTING CABLE LINE	EXISTING STORM MANHOLE
EXISTING UNDERGROUND ELECTRIC	EXISTING SANITARY SEWER MANHOLE
EXISTING WATER LINE	EXISTING SIGN
EXISTING SANITARY SEWER LINE	EXISTING LANDSCAPE AREA TO BE REMOVED
EXISTING FIBER OPTIC EQUIP. / LINE	EXISTING CONCRETE PAVING TO BE REMOVED
TREE PROTECTION	EXISTING ASPHALT PAVING TO BE REMOVED
EXISTING TREE TO BE REMOVED	EXISTING BUILDING AREA TO BE REMOVED
EXISTING TREE TO REMAIN	

DEMOLITION NOTES:

1. THE CONTRACTOR SHALL FIELD VERIFY AND LOCATE ALL EXISTING UTILITIES ON-SITE PRIOR TO DEMOLITION.
2. IT WILL BE THE RESPONSIBILITY OF THE CONTRACTOR TO OBTAIN ANY PERMITS AND PAY ANY FEES REQUIRED FOR DEMOLITION AND HAUL-OFF FROM THE APPROPRIATE AUTHORITIES.
3. THE CONTRACTOR SHALL PREPARE ALL DOCUMENTS AND ACQUIRE APPROPRIATE PERMITS AS REQUIRED PRIOR TO THE COMMENCEMENT OF DEMOLITION.
4. THE DEMOLITION PLAN IS INTENDED TO DEPICT GENERAL DEMOLITION AND UTILITY WORK. IT IS NOT INTENDED TO IDENTIFY EACH ELEMENT OF DEMOLITION OR RELOCATION. THE CONTRACTOR SHALL COORDINATE WITH THE OWNER AND APPROPRIATE UTILITY COMPANY PRIOR TO WORK.
5. CONTRACTOR TO COMPLETELY DEMOLISH AND DISPOSE OF OFF-SITE IN A LAWFUL MANNER EXISTING APPURTENANCES LOCATED ON AND AROUND THE PROPERTY INCLUDING BUT NOT LIMITED TO BOLLARDS, GAS METERS, AIR CONDITIONING UNITS, SIGNS, CURBS, SIDEWALKS, ELECTRIC METERS, FENCING, ETC.
6. REMOVE AND DISPOSE OF ANY SIDEWALK, FENCES, STAIRS, WALLS, FOUNDATIONS, CONDUITS, LIGHT POLE BASES, DEBRIS AND RUBBISH REQUIRING REMOVAL FROM THE WORK AREA IN AN APPROVED LANDFILL.
7. REMOVE AND/OR PLUG EXISTING UTILITIES SUCH AS SANITARY SEWER, WATER, GAS, ELECTRIC, AND TELEPHONE AS SHOWN OR AS NEEDED. THE CONTRACTOR IS RESPONSIBLE FOR CONTACTING EACH UTILITY COMPANY TO COORDINATE REMOVAL OF ALL UTILITIES AND FOR DETERMINING HORIZONTAL AND VERTICAL LOCATIONS OF UTILITIES PRIOR TO COMMENCING WORK.
8. THE CONTRACTOR SHALL CUT AND PLUG, OR ARRANGE FOR THE APPROPRIATE UTILITY COMPANY TO CUT AND PLUG ALL SERVICE PIPING AT THE STREET LINE OR MAIN, AS REQUIRED, OR AS OTHERWISE NOTED. ALL SERVICES MAY NOT BE SHOWN ON THIS PLAN. THE CONTRACTOR SHALL INVESTIGATE THE SITE PRIOR TO BIDDING TO DETERMINE THE EXTENT OF SERVICE PIPING TO BE REMOVED, CUT OR PLUGGED.
9. THE CONTRACTOR SHALL ARRANGE FOR THE RESETTING OF CURB BOXES AND/OR VALVE BOXES WITH THE APPROPRIATE UTILITY COMPANY.
10. INSTALL ALL EROSION AND SEDIMENT CONTROL DEVICES PRIOR TO BEGINNING DEMOLITION WORK.
11. THE CONTRACTOR IS RESPONSIBLE FOR THE PROTECTION OF ALL UTILITIES TO REMAIN IN PLACE.
12. THE CONTRACTOR SHALL TAKE ALL PRECAUTIONS TO AVOID UNNECESSARY DAMAGE TO EXISTING ROAD SURFACE.
13. FINISH SURFACE TO BE REMOVED OR DEMOLISHED SHALL BE CUT ALONG LINES OF JOINTS WHICH WILL PERMIT A NEAT SURFACE WHEN RESTORED.
14. ALL EXISTING ITEMS TO REMAIN WHICH ARE DAMAGED DURING CONSTRUCTION SHALL BE RESTORED TO ITS ORIGINAL CONDITION AT THE SOLE EXPENSE OF THE CONTRACTOR.
15. DO NOT INTERRUPT EXISTING UTILITIES SERVICING FACILITIES OCCUPIED AND USED BY THE OWNER OR OTHERS DURING OCCUPIED HOURS EXCEPT WHEN SUCH INTERRUPTIONS HAVE BEEN AUTHORIZED IN WRITING BY THE OWNER AND THE LOCAL MUNICIPALITIES. INTERRUPTIONS SHALL ONLY OCCUR AFTER ACCEPTABLE TEMPORARY SERVICE HAS BEEN PROVIDED.
16. SHOULD ANY UNCHARTED OR INCORRECTLY CHARTED EXISTING PIPING OR OTHER UTILITY BE UNCOVERED DURING EXCAVATION, CONTACT THE ENGINEER IMMEDIATELY FOR DIRECTIONS BEFORE PROCEEDING FURTHER WITH WORK IN THE AREA.

STOP!
CALL BEFORE YOU DIG
DIG TESS
1-800-DIG-TESS
(at least 72 hours prior to digging)

No.	REVISIONS	DATE	BY

Kimley-Horn and Associates, Inc.
State of Texas Registration No. F-928
5750 GENESIS COURT, SUITE 200, FRISCO, TX 75034
PHONE: 972-335-3580 FAX: 972-335-3779
WWW.KIMLEY-HORN.COM

STATE OF TEXAS
ROY BRASWELL
104908
LICENSED PROFESSIONAL ENGINEER
6/14/13

KHA PROJECT 063319038
DATE 06/14/2013
SCALE AS SHOWN
DESIGNED BY TBB
DRAWN BY AAE
CHECKED BY TBB

VILLAGE ON THE PARKWAY PHASE II
ADDISON, TEXAS

DEMOLITION PLAN

SHEET NUMBER
C-05

This document, together with the concepts and designs presented herein, as an instrument of service, is intended only for the specific purpose and client for which it was prepared. Reuse of and improper reliance on this document without written authorization and adaptation by Kimley-Horn and Associates, Inc. shall be without liability to Kimley-Horn and Associates, Inc.

PLOTTED BY LUCIO, RAMIRO 6/14/2013 1:25 PM
DWG NAME K:\FRI_CIVIL\063319038-VOP2\WORK\PLAN SET\PHASE II\C-05-DEMOLITION PLAN.DWG [C-05 DEMOLITION PLAN]
LAST SAVED 6/14/2013 1:02 PM

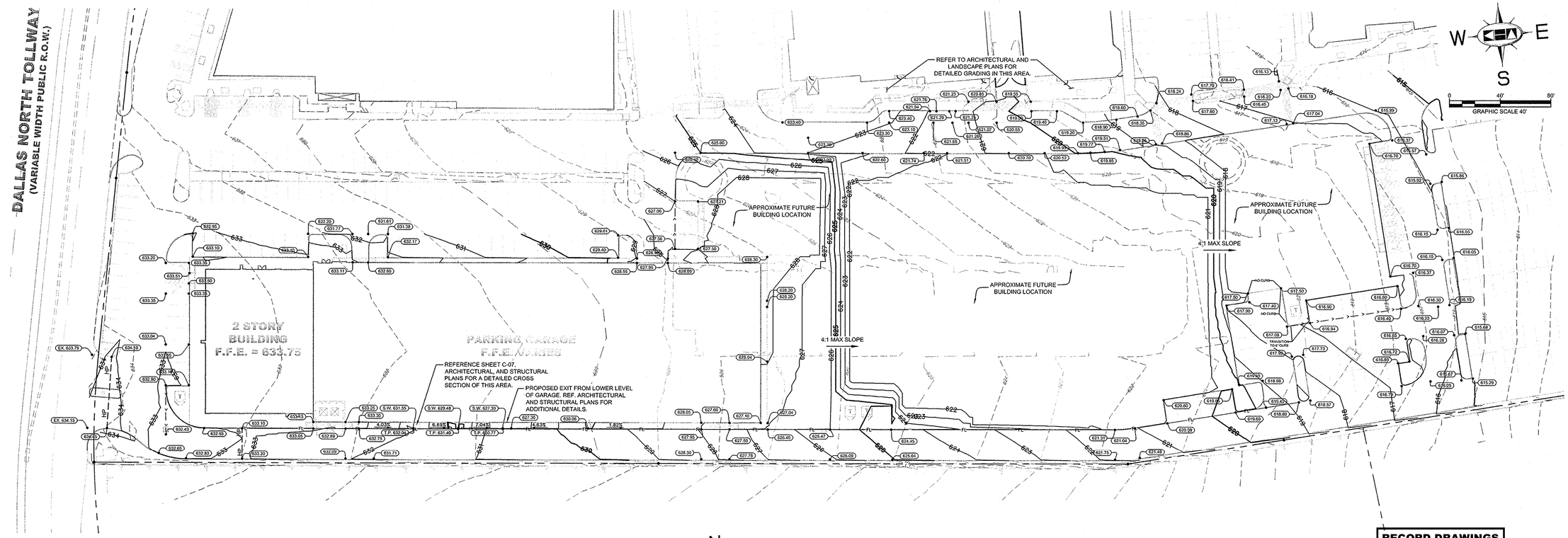

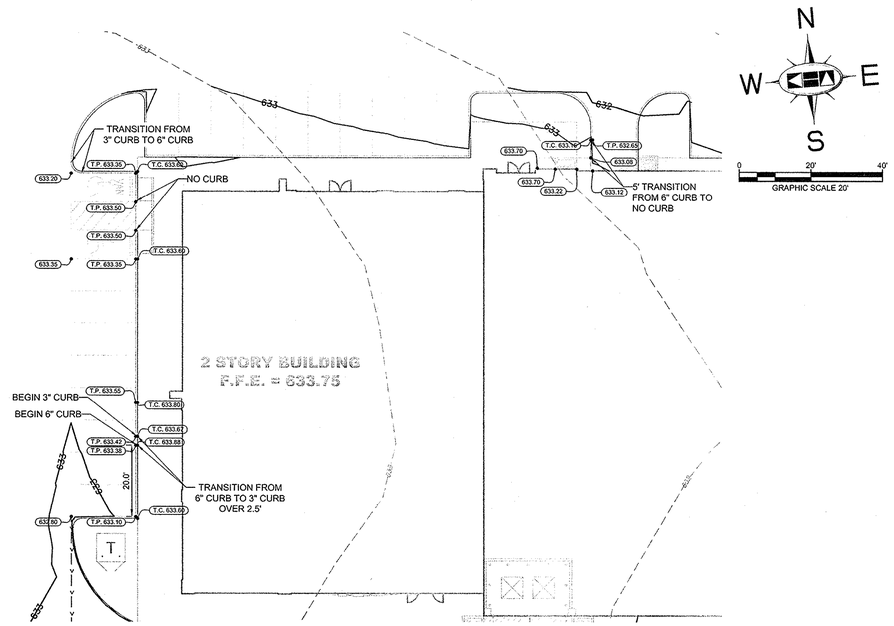

RECORD DRAWINGS
(October 2013)
Information Provided By:
BOB MOORE CONSTRUCTION

NOTES

1. THE CONTRACTOR IS SPECIFICALLY CAUTIONED THAT THE LOCATION AND/OR ELEVATION OF EXISTING UTILITIES AS SHOWN ON THESE PLANS IS BASED ON RECORDS OF THE VARIOUS UTILITY COMPANIES, AND WHERE POSSIBLE, MEASUREMENTS TAKEN IN THE FIELD. THE INFORMATION IS NOT TO BE RELIED ON AS BEING EXACT OR COMPLETE. THE CONTRACTOR MUST CALL THE APPROPRIATE UTILITY COMPANIES AT LEAST 72 HOURS BEFORE ANY EXCAVATION TO REQUEST EXACT FIELD LOCATION OF UTILITIES. IT SHALL BE THE RESPONSIBILITY OF THE CONTRACTOR TO RELOCATE ALL EXISTING UTILITIES WHICH CONFLICT WITH THE PROPOSED IMPROVEMENTS SHOWN ON THE PLANS.
2. ALL CUT OR FILL SLOPES SHALL BE 4:1 OR FLATTER UNLESS OTHERWISE NOTED.
3. EXISTING GRADE CONTOUR INTERVALS SHOWN AT 1 FOOT.
4. PROPOSED GRADE CONTOUR INTERVALS SHOWN AT 1 FOOT INTERVALS.
5. IF ANY EXISTING STRUCTURES TO REMAIN ARE DAMAGED DURING CONSTRUCTION IT SHALL BE THE CONTRACTORS RESPONSIBILITY TO REPAIR AND/OR REPLACE THE EXISTING STRUCTURE AS NECESSARY TO RETURN IT TO EXISTING CONDITIONS OR BETTER.
6. THE CONTRACTOR SHALL ADHERE TO ALL TERMS & CONDITIONS AS OUTLINED IN THE EPA OR APPLICABLE STATE GENERAL N.P.D.E.S. PERMIT FOR STORM WATER DISCHARGE ASSOCIATED WITH CONSTRUCTION ACTIVITIES.
7. CONTRACTOR SHALL ADJUST AND/OR CUT EXISTING PAVEMENT AS NECESSARY TO ASSURE A SMOOTH FIT AND CONTINUOUS GRADE.
8. CONTRACTOR SHALL ASSURE POSITIVE DRAINAGE AWAY FROM BUILDINGS FOR ALL NATURAL AND PAVED AREAS.
9. TOPOGRAPHIC INFORMATION IS TAKEN FROM A TOPOGRAPHIC SURVEY BY LAND SURVEYORS. IF THE CONTRACTOR DOES NOT ACCEPT EXISTING TOPOGRAPHY AS SHOWN ON THE PLANS, WITHOUT EXCEPTION, THEN THE CONTRACTOR SHALL SUPPLY, AT THEIR EXPENSE, A TOPOGRAPHIC SURVEY BY A REGISTERED LAND SURVEYOR TO THE OWNER FOR REVIEW.
10. ALL UNSURFACED AREAS DISTURBED BY GRADING OPERATION SHALL RECEIVE 4 INCHES OF TOPSOIL. CONTRACTOR SHALL APPLY STABILIZATION FABRIC TO ALL SLOPES 4H:1V OR STEEPER. CONTRACTOR SHALL STABILIZE DISTURBED AREAS IN ACCORDANCE WITH GOVERNING SPECIFICATIONS UNTIL A HEALTHY STAND OF VEGETATION IS OBTAINED.
11. CONSTRUCTION SHALL COMPLY WITH ALL APPLICABLE GOVERNING CODES AND BE CONSTRUCTED TO SAME.
12. CONTRACTOR SHALL REFER TO ARCHITECTURAL PLANS FOR EXACT BUILDING FOOTPRINT DIMENSIONS.
13. CONTRACTOR SHALL REFER TO ARCHITECTURAL PLANS AND FINAL GEOTECH REPORT FOR BUILDING SUBGRADE PREPARATION REQUIREMENTS.
14. CONTRACTOR SHALL ADJUST EXISTING VALVES, MANHOLE RIMS, ETC. AS NECESSARY TO MATCH FINISHED GRADE.
15. ALL ELEVATIONS ARE TOP OF PAVEMENT UNLESS NOTED OTHERWISE. TO GET TOP OF CURB ELEVATIONS ADD 6" TO THE ELEVATION SHOWN.
16. GRADING FOR ALL SIDEWALKS AND ACCESSIBLE ROUTES INCLUDING CROSSING DRIVEWAYS SHALL CONFORM TO ADA STANDARDS. SLOPES SHALL NOT EXCEED 5% LONGITUDINAL SLOPE OR 2% CROSS SLOPE. SIDEWALK ACCESS TO EXTERNAL BUILDING DOORS SHALL BE ADA COMPLIANT. CONTRACTOR SHALL NOTIFY ENGINEER IMMEDIATELY IF ADA CRITERIA CANNOT BE MET AT ANY LOCATION.

BENCHMARKS

BM 5 "⊠" SET ON NORTHWEST CORNER OF CONCRETE PAD FOR SWB TELEPHONE BOX, 15± EAST OF NORTHBOUND DALLAS NORTH TOLLWAY ACCESS ROAD AND 1,450± SOUTH OF BELT LINE ROAD.

ELEV=635.30

BM 6 "⊠" SET ON SOUTHEAST CORNER OF CURB INLET; 15± WEST OF MONTFORT DRIVE AND 750± SOUTH OF SAKOWITZ DRIVE.

ELEV=603.67

BM 9 "⊠" SET ON SOUTHEAST CORNER OF CURB INLET ON EAST SIDE OF DALLAS NORTH TOLLWAY ACCESS ROAD AND 300± SOUTH OF BELT LINE ROAD.

ELEV=627.34

FLOODPLAIN NOTE

AS DETERMINED BY THE FLOOD INSURANCE RATE MAPS FOR DALLAS COUNTY, THE SUBJECT PROPERTY DOES NOT APPEAR TO LIE WITHIN A SPECIAL FLOOD HAZARD AREA (100 YEAR FLOOD), MAP DATE 08/23/01 COMMUNITY PANEL NO. 48113C0180 J, SUBJECT LOT IS LOCATED IN ZONE "X". IF THIS SITE IS NOT WITHIN AN IDENTIFIED FLOOD HAZARD AREA. THIS FLOOD STATEMENT DOES NOT IMPLY THAT THE PROPERTY AND/OR STRUCTURES THEREON WILL BE FREE FROM FLOODING OR FLOOD DAMAGE. ON RARE OCCASIONS, GREATER FLOODS CAN AND WILL OCCUR AND FLOOD HEIGHTS MAY BE INCREASED BY MAN-MADE OR NATURAL CAUSES. THIS FLOOD STATEMENT SHALL NOT CREATE LIABILITY ON THE PART OF THE SURVEYOR OR ENGINEER.

LEGEND

693	PROPOSED CONTOURS
685	EXISTING CONTOURS
685.75	PROPOSED TOP OF PAVEMENT ELEVATION
685.75	EXISTING SPOT ELEVATION
TOP 632.4 •	TOP OF INLET GRATE ELEVATION
—<—<—<—	SWALE
HP HP	HIGH POINT
— — — —	MATCH EXISTING PAVEMENT

STOP!
CALL BEFORE YOU DIG
DIG TESS
1-800-DIG-TESS
(at least 72 hours prior to digging)

!!WARNING!!
EXISTING UTILITIES IN THE AREA. CONTRACTOR SHALL FIELD VERIFY THE LOCATION OF ALL EXISTING UTILITIES WITH THE PROVIDER PRIOR TO START OF CONSTRUCTION AND SHALL IMMEDIATELY NOTIFY THE ENGINEER OF ANY CONFLICTS DISCOVERED. CONTRACTOR IS RESPONSIBLE FOR COORDINATING UTILITY RELOCATION WHERE NECESSARY AND PROTECTING EXISTING UTILITIES (SHOWN OR NOT SHOWN). IF ANY EXISTING UTILITIES ARE DAMAGED, THE CONTRACTOR SHALL REPLACE THEM AT THEIR OWN EXPENSE.

No.	REVISIONS	DATE	BY

Kimley-Horn and Associates, Inc.
State of Texas Registration No. F-928
5750 GENESIS COURT, SUITE 200, FRISCO, TX 75034
PHONE: 972-335-3580 FAX: 972-335-3779
WWW.KIMLEY-HORN.COM

STATE OF TEXAS
ROY BRASWELL
104908
LICENSED
PROFESSIONAL ENGINEER
6/14/13

KHA PROJECT 063319038
DATE 06/14/2013
SCALE AS SHOWN
DESIGNED BY TBB
DRAWN BY AAE
CHECKED BY TBB

VILLAGE ON THE PARKWAY PHASE II
ADDISON, TEXAS

GRADING PLAN

SHEET NUMBER
C-06

PLOTTED BY LUCIO, RAMIRO 6/14/2013 4:07 PM
DWG NAME K:\FRI_CIVIL\063190\38\VOP2\DWG\PLAN SET PHASE II\C-06-GRADE.DWG [C-06 GRADING PLAN]
LAST SAVED 6/14/2013 4:14 PM
This document, together with the concepts and designs presented herein, as an instrument of service, is intended only for the specific purpose and client for which it was prepared. Reuse of and improper reliance on this document without written authorization and adaptation by Kimley-Horn and Associates, Inc. shall be without liability to Kimley-Horn and Associates, Inc.

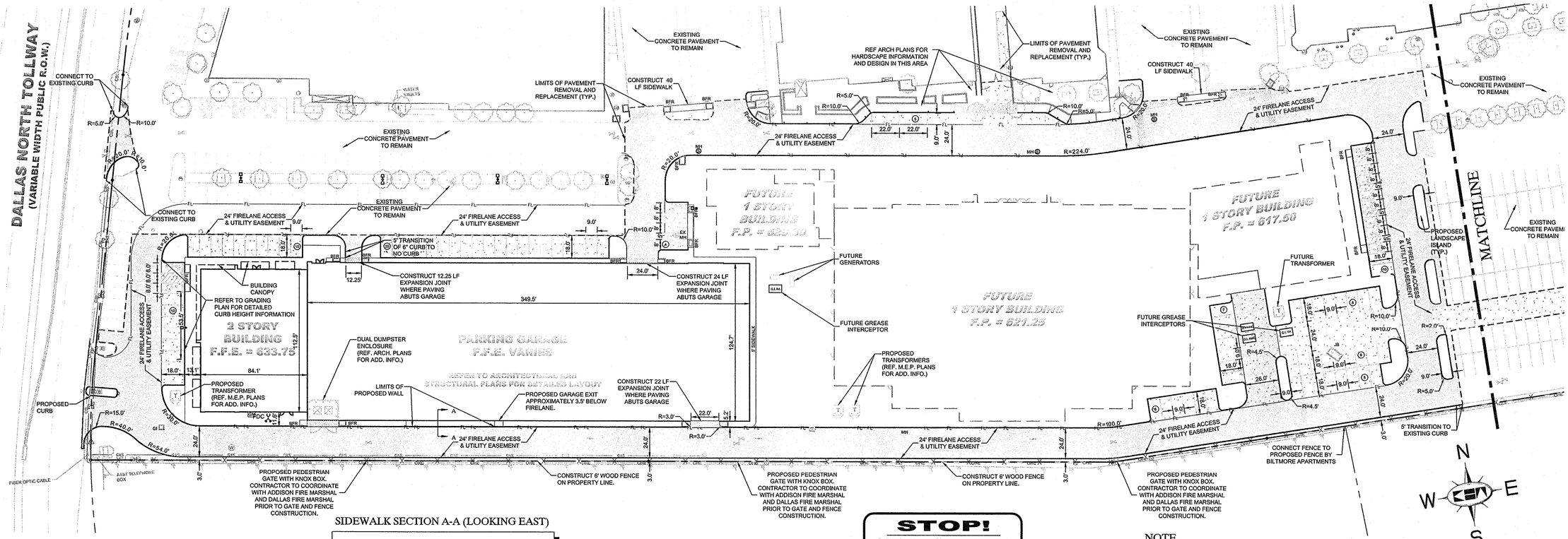

SIDEWALK SECTION A-A (LOOKING EAST)

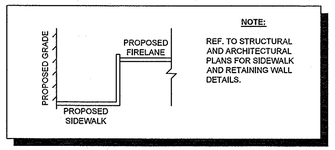

NOTE:

REF. TO STRUCTURAL AND ARCHITECTURAL PLANS FOR SIDEWALK AND RETAINING WALL DETAILS.

STOP!
CALL BEFORE YOU DIG
DIG TESS
1-800-DIG-TESS
(at least 72 hours prior to digging)

NOTE

PRIOR TO CONSTRUCTION, CONTRACTOR TO NOTIFY ENGINEER IMMEDIATELY SHOULD THERE BE ANY DISCREPANCIES OR IF EXISTING FIELD CONDITIONS VARY FROM THOSE SHOWN ON THESE PLANS.

RECORD DRAWINGS
(October 2013)
Information Provided By:
BOB MOORE CONSTRUCTION

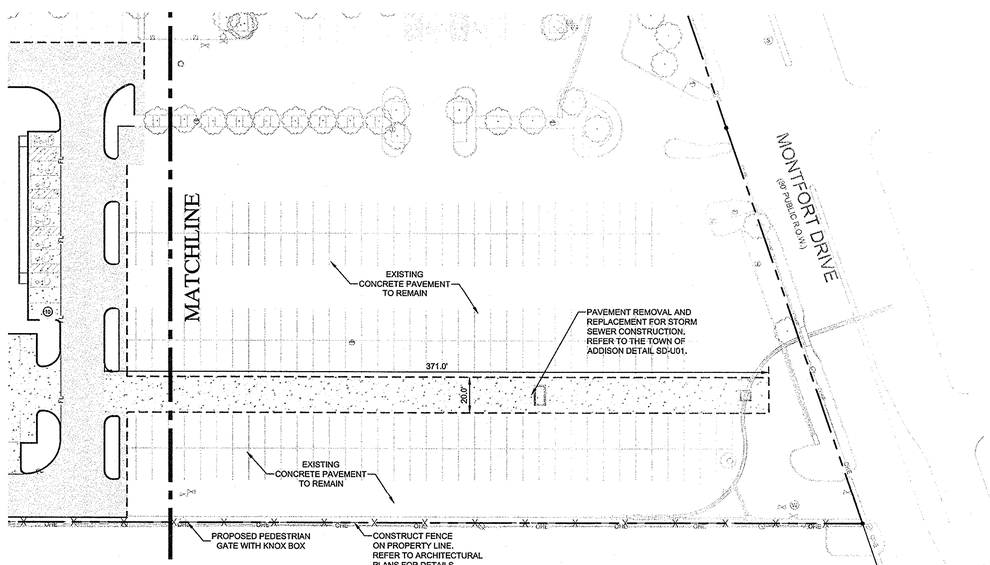

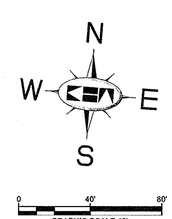

LIGHT DUTY PAVEMENT SECTION

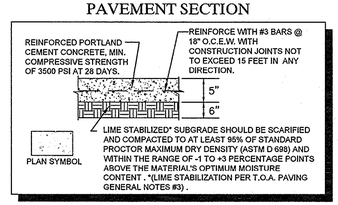

MEDIUM DUTY PAVEMENT SECTION

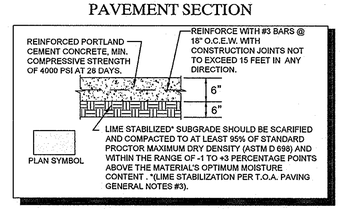

HEAVY DUTY PAVEMENT SECTION

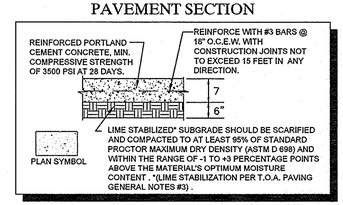

LEGEND

PROPERTY LINE	BARRIER FREE RAMP (BFR)
EXISTING OVERHEAD POWER LINE	PROPOSED LIGHT POLE
EXISTING CABLE LINE	EXISTING POWER POLE
EXISTING GAS LINE	EXISTING LIGHT POLE
EXISTING WATER LINE	EXISTING FIRE HYDRANT
EXISTING SANITARY SEWER LINE	EXISTING STORM MANHOLE
EXISTING UNDERGROUND COMM.	EXISTING SANITARY SEWER MANHOLE
LIMITS OF PAVEMENT REMOVAL	EXISTING SIGN
	EXISTING WATER VALVE

!!WARNING!!

EXISTING UTILITIES IN THE AREA. CONTRACTOR SHALL FIELD VERIFY THE LOCATION OF ALL EXISTING UTILITIES WITH THE PROVIDER PRIOR TO START OF CONSTRUCTION AND SHALL IMMEDIATELY NOTIFY THE ENGINEER OF ANY CONFLICTS DISCOVERED. CONTRACTOR IS RESPONSIBLE FOR COORDINATING UTILITY RELOCATION WHERE NECESSARY AND PROTECTING EXISTING UTILITIES (SHOWN OR NOT SHOWN). IF ANY EXISTING UTILITIES ARE DAMAGED, THE CONTRACTOR SHALL REPLACE THEM AT THEIR OWN EXPENSE.

NOTES

1. ALL WORK AND MATERIALS SHALL COMPLY WITH ALL TOWN/COUNTY REGULATIONS AND CODES AND O.S.H.A. STANDARDS.
2. REFERENCE ARCHITECTURAL AND LANDSCAPE ARCHITECTURAL PLANS FOR DETAILED HARDSCAPE FEATURES (PAVERS, BENCHES, DECORATIVE PLANTERS ETC.)
3. REFERENCE ARCHITECTURAL PLANS FOR EXACT BUILDING FOOTPRINT DIMENSIONS.
4. CONTRACTOR SHALL REFER TO FINAL GEOTECH REPORT FOR SUBGRADE PREPARATION REQUIREMENTS.
5. ALL DIMENSIONS ARE FROM THE FACE OF CURB, FACE OF BUILDING, OR PROPERTY LINE UNLESS NOTED OTHERWISE.
6. CONTRACTOR SHALL ADJUST EXISTING VALVES, MANHOLE RIMS, ETC. AS NECESSARY TO MATCH FINISHED GRADE.
7. CONTRACTOR SHALL BE RESPONSIBLE FOR ALL RELOCATIONS, (UNLESS OTHERWISE NOTED ON PLANS) INCLUDING BUT NOT LIMITED TO, TREES, UTILITIES, STORM DRAINAGE, SIGNS, TRAFFIC SIGNALS & POLES, ETC. AS REQUIRED. ALL WORK SHALL BE IN ACCORDANCE WITH GOVERNING AUTHORITIES REQUIREMENTS AND PROJECT SITE WORK SPECIFICATIONS AND SHALL BE APPROVED BY SUCH. ALL COST SHALL BE INCLUDED IN BASE BID.
8. SITE BOUNDARY, TOPOGRAPHY, UTILITY AND ROAD INFORMATION TAKEN FROM A SURVEY PREPARED BY KIMLEY-HORN AND ASSOCIATES, INC.
9. LONGITUDINAL BUTT JOINTS SHALL BE INSTALLED WHERE NEW PAVEMENT ABUTS EXISTING CONCRETE.

BENCHMARKS

BM 5 "X" SET ON NORTHWEST CORNER OF CONCRETE PAD FOR SWB TELEPHONE BOX, 15'± EAST OF NORTHBOUND DALLAS NORTH TOLLWAY ACCESS ROAD AND 1,450'± SOUTH OF BELT LINE ROAD.

ELEV=635.30

BM 6 "X" SET ON SOUTHEAST CORNER OF CURB INLET; 15'± WEST OF MONTFORT DRIVE AND 750'± SOUTH OF SAKOWITZ DRIVE.

ELEV=603.67

BM 9 "X" SET ON SOUTHEAST CORNER OF CURB INLET ON EAST SIDE OF DALLAS NORTH TOLLWAY ACCESS ROAD AND 300'± SOUTH OF BELT LINE ROAD.

ELEV=627.34

No.	REVISIONS	DATE	BY

Kimley-Horn and Associates, Inc.
State of Texas Registration No. F-928
5750 GENESIS COURT, SUITE 200, FRISCO, TX 75034
PHONE: 972-335-3580 FAX: 972-335-3779
WWW.KIMLEY-HORN.COM

STATE OF TEXAS
ROY BRASWELL
104908
LICENSED PROFESSIONAL ENGINEER
6/14/13

KHA PROJECT 063319038
DATE 06/14/2013
SCALE AS SHOWN
DESIGNED BY TBB
DRAWN BY AAE
CHECKED BY TBB

VILLAGE ON THE PARKWAY PHASE II
ADDISON, TEXAS

PAVING & DIMENSION CONTROL PLAN

SHEET NUMBER
C-07

PLOTTED BY LUCIO, RAMIRO 6/14/2013 1:23 PM
DWG NAME K:\FRI_CIVIL\063319038-VOND\DWG\PLAN SET PHASE II\C-07-PAVING-PLAN.DWG [C-08 PAVING & DIMENSION CONTROL PLAN]
LAST SAVED 6/14/2013 1:03 PM
This document, together with the concepts and designs presented herein, as an instrument of service, is intended only for the specific purpose and client for which it was prepared. Reuse of and improper reliance on this document without written authorization and adaptation by Kimley-Horn and Associates, Inc. shall be without liability to Kimley-Horn and Associates, Inc.

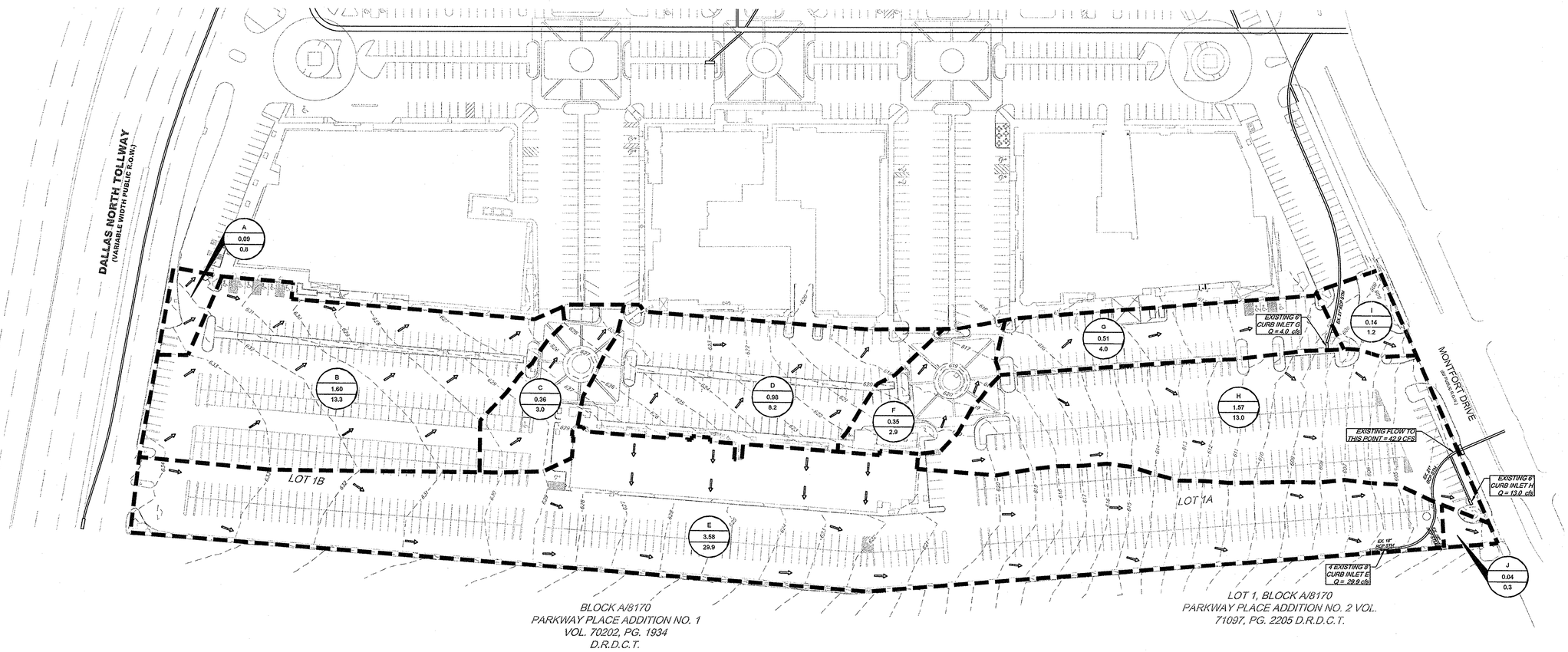

N
W E
S
0 60' 120'
GRAPHIC SCALE 60'

EXISTING CONDITION DRAINAGE AREA CALCULATIONS

DRAINAGE AREA NO.	RUNOFF COEFF. "C"	RAINFALL INTENSITY "I" I_{100}	TC (MIN.)	AREA (AC.)	Q_{100} (CFS)	COLLECTION POINT
A	0.90	9.27	10	0.09	0.8	OFFSITE INLET
B	0.90	9.27	10	1.60	13.3	OFFSITE INLET
C	0.90	9.27	10	0.36	3.0	OFFSITE INLET
D	0.90	9.27	10	0.98	8.2	OFFSITE INLET
E	0.90	9.27	10	3.58	29.9	EXISTING CURB INLET E
F	0.90	9.27	10	0.35	2.9	OFFSITE INLET
G	0.85	9.27	10	0.51	4.0	EXISTING CURB INLET G
H	0.90	9.27	10	1.57	13.0	EXISTING CURB INLET H
I	0.90	9.27	10	0.14	1.2	MONTFORT DRIVE SYSTEM
J	0.90	9.27	10	0.04	0.3	MONTFORT DRIVE SYSTEM

NOTES

1. DRAINAGE AREA "A" INFORMATION IS FROM AREA "VI" FROM THE VILLAGE ON THE PARKWAY, VILLAGE PARKWAY VENTURE BY ALBERT H. HALFF ASSOCIATES, INC. DATED MAY 1978.
2. DRAINAGE AREA "B" INFORMATION IS FROM AREA "VII" FROM THE VILLAGE ON THE PARKWAY, VILLAGE PARKWAY VENTURE BY ALBERT H. HALFF ASSOCIATES, INC. DATED MAY 1978.
3. DRAINAGE AREA "C" INFORMATION IS FROM AREA "V" FROM THE VILLAGE ON THE PARKWAY, VILLAGE PARKWAY VENTURE BY ALBERT H. HALFF ASSOCIATES, INC. DATED MAY 1978.
4. DRAINAGE AREA "D" INFORMATION IS FROM AREA "IX" FROM THE VILLAGE ON THE PARKWAY, VILLAGE PARKWAY VENTURE BY ALBERT H. HALFF ASSOCIATES, INC. DATED MAY 1978.
5. DRAINAGE AREA "E" INFORMATION IS FROM AREA "VIII" FROM THE VILLAGE ON THE PARKWAY, VILLAGE PARKWAY VENTURE BY ALBERT H. HALFF ASSOCIATES, INC. DATED FEBRUARY 1979.
6. DRAINAGE AREA "F" INFORMATION IS FROM AREA "XIII" FROM THE VILLAGE ON THE PARKWAY, VILLAGE PARKWAY VENTURE BY ALBERT H. HALFF ASSOCIATES, INC. DATED FEBRUARY 1979.
7. DRAINAGE AREA "G" INFORMATION IS FROM AREA "XV" FROM THE VILLAGE ON THE PARKWAY, VILLAGE PARKWAY VENTURE BY ALBERT H. HALFF ASSOCIATES, INC. DATED FEBRUARY 1979.
8. DRAINAGE AREA "H" INFORMATION IS FROM AREA "XVI" FROM THE VILLAGE ON THE PARKWAY, VILLAGE PARKWAY VENTURE BY ALBERT H. HALFF ASSOCIATES, INC. DATED FEBRUARY 1979.
9. DRAINAGE AREA "I" INFORMATION IS FROM AREA "XVII" FROM THE VILLAGE ON THE PARKWAY, VILLAGE PARKWAY VENTURE BY ALBERT H. HALFF ASSOCIATES, INC. DATED FEBRUARY 1979.
10. DRAINAGE AREA "J" INFORMATION IS FROM AREA "XVIII" FROM THE VILLAGE ON THE PARKWAY, VILLAGE PARKWAY VENTURE BY ALBERT H. HALFF ASSOCIATES, INC. DATED FEBRUARY 1979.

LEGEND

A1 — AREA DESIGNATION
4.21 ac — AREA (AC.)
33.1cfs — Q_{100}(cfs)
DRAINAGE AREA BOUNDARY
FLOW ARROWS
--658-- EXISTING CONTOURS

FLOODPLAIN NOTE

AS DETERMINED BY THE FLOOD INSURANCE RATE MAPS FOR DALLAS COUNTY, THE SUBJECT PROPERTY DOES NOT APPEAR TO LIE WITHIN A SPECIAL FLOOD HAZARD AREA (100 YEAR FLOOD), MAP DATE 09/23/01 COMMUNITY PANEL NO. 48113C0180 J, SUBJECT LOT IS LOCATED IN ZONE "X". IF THIS SITE IS NOT WITHIN AN IDENTIFIED FLOOD HAZARD AREA, THIS FLOOD STATEMENT DOES NOT IMPLY THAT THE PROPERTY AND/OR STRUCTURES THEREON WILL BE FREE FROM FLOODING OR FLOOD DAMAGE. ON RARE OCCASIONS, GREATER FLOODS CAN AND WILL OCCUR AND FLOOD HEIGHTS MAY BE INCREASED BY MAN-MADE OR NATURAL CAUSES. THIS FLOOD STATEMENT SHALL NOT CREATE LIABILITY ON THE PART OF THE SURVEYOR OR ENGINEER.

RECORD DRAWINGS (May 2014)
Information Provided By:
BOB MOORE CONSTRUCTION

BENCHMARKS

BM 5 "⊠" SET ON NORTHWEST CORNER OF CONCRETE PAD FOR SWB TELEPHONE BOX, 15'± EAST OF NORTHBOUND DALLAS NORTH TOLLWAY ACCESS ROAD AND 1,450'± SOUTH OF BELT LINE ROAD.

ELEV=635.30

BM 6 "⊠" SET ON SOUTHEAST CORNER OF CURB INLET; 15'± WEST OF MONTFORT DRIVE AND 750'± SOUTH OF SAKOWITZ DRIVE.

ELEV=603.67

BM 9 "⊠" SET ON SOUTHEAST CORNER OF CURB INLET ON EAST SIDE OF DALLAS NORTH TOLLWAY ACCESS ROAD AND 300'± SOUTH OF BELT LINE ROAD.

ELEV=627.34

No.	REVISIONS	DATE	BY

Kimley-Horn and Associates, Inc.
State of Texas Registration No. F-928
5750 GENESIS COURT, SUITE 200, FRISCO, TX 75034
PHONE: 972-335-3580 FAX: 972-335-3779
WWW.KIMLEY-HORN.COM

STATE OF TEXAS
ROY BRASWELL
104908
LICENSED PROFESSIONAL ENGINEER
7/16/13

KHA PROJECT	063319038
DATE	07/16/2013
SCALE	AS SHOWN
DESIGNED BY	TBB
DRAWN BY	AAE
CHECKED BY	TBB

VILLAGE ON THE PARKWAY PHASE II
ADDISON, TEXAS

EXISTING CONDITIONS DRAINAGE AREA MAP

SHEET NUMBER
C-08

PLOTTED BY WHITE, SARAH BETH 7/16/2013 10:23 AM
DWG NAME K:\FBL_CIVIL\063319038-VOPKPWO\PLAN SET PHASE II\C-08-DAM-EXIST.DWG [C-08 EXISTING CONDITIONS DRAINAGE AREA MAP]
LAST SAVED 6/27/2013 2:46 PM
This document, together with the concepts and designs presented herein, as an instrument of service, is intended only for the specific purpose and client for which it was prepared. Reuse of and improper reliance on this document without written authorization and adaptation by Kimley-Horn and Associates, Inc. shall be without liability to Kimley-Horn and Associates, Inc.

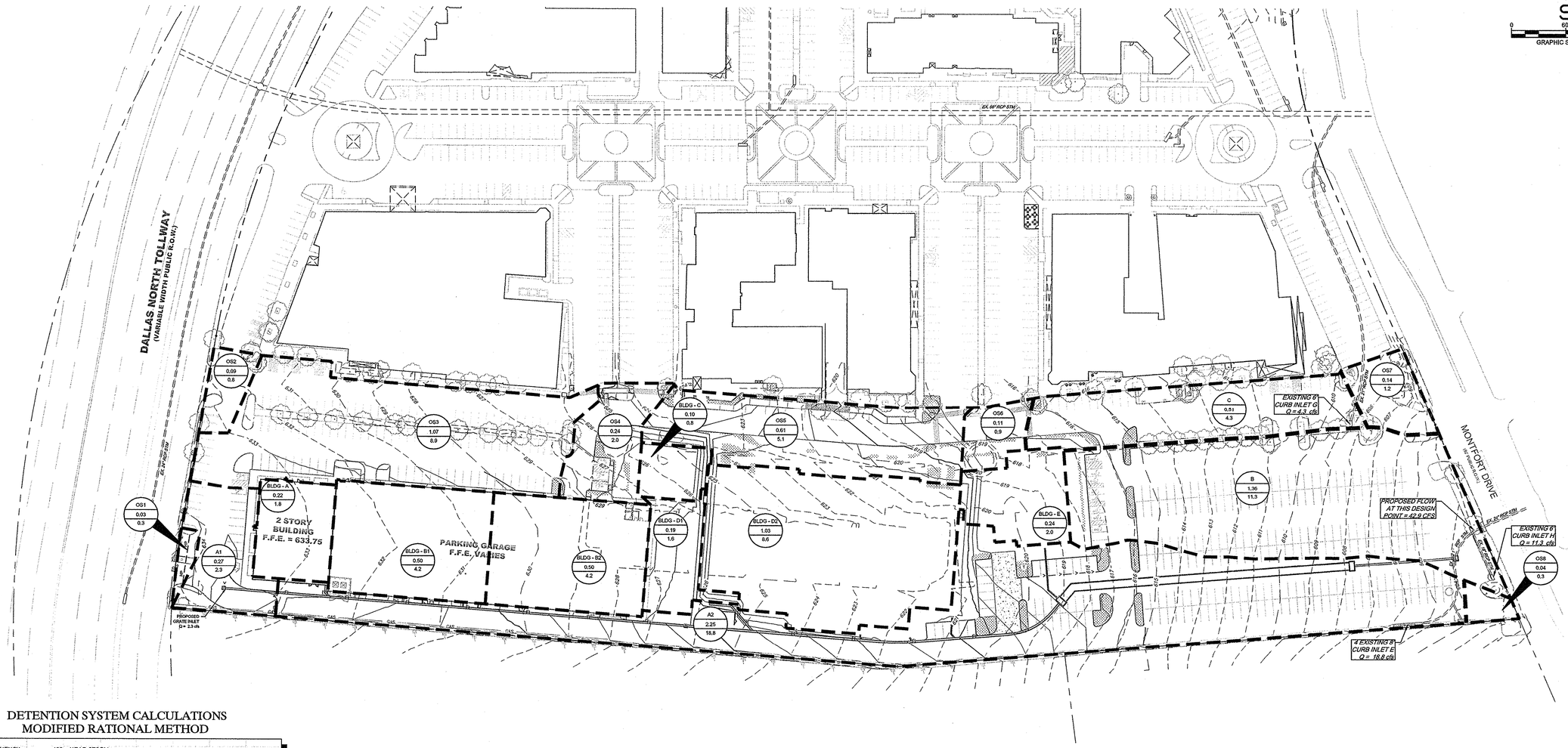

DETENTION SYSTEM CALCULATIONS
MODIFIED RATIONAL METHOD

DESIGN FREQUENCY = 100 YEAR STORM

ALLOWABLE RELEASE RATE (EXISTING CONDITIONS):

DRAINAGE AREA (A)	1.54	AC
TIME OF CONC. (T_c)	10	MIN
RAINFALL INTENSITY (I)	9.27	IN/HR
RUNOFF COEFFICIENT (C)	0.60	
ALLOW. SITE DISCHARGE	12.8	CFS

PROPOSED CONDITIONS:

ON-SITE DETAINED RUNOFF:			OFF-SITE PASS THROUGH FLOW:		
DRAINAGE AREA (A)	3.05	AC	DRAINAGE AREA (A)	0.00	AC
TIME OF CONC. (T_c)	10	MIN	TIME OF CONC. (T_c)	10	MIN
RAINFALL INTENSITY (I)	9.27	IN/HR	RAINFALL INTENSITY (I)	9.27	IN/HR
RUNOFF COEFFICIENT (C)	0.90		RUNOFF COEFFICIENT (C)	0.90	
DETAINED RUNOFF	25.4	CFS	OFF-SITE PASS THROUGH FLOW	0.00	CFS
ON-SITE UNDETAINED RUNOFF:					
DRAINAGE AREA (A)	0.00	AC			
TIME OF CONC. (T_c)	10	MIN			
RAINFALL INTENSITY (I)	9.27	IN/HR	ALLOWABLE DISCHARGE	12.8	CFS
RUNOFF COEFFICIENT (C)	0.90				
UNDETAINED RUNOFF	0.0	CFS	ACTUAL DISCHARGE	12.8	CFS

STORAGE CALCULATIONS:

DURATION		RAINFALL INTENSITY	INFLOW RATE	INFLOW VOLUME	OUTFLOW RATE	OUTFLOW VOLUME	REQUIRED STORAGE (INFLOW - OUTFLOW)	
(MIN)	(HRS)	(IN/HR)	(CFS)	(CF)	(CFS)	(CF)	(CF)	(AC-FT)
5	0.08	11.17	30.7	9,197	12.8	5,782	3,415	0.08
10	0.17	9.27	25.5	15,272	12.8	7,709	7,563	0.17
15	0.25	7.99	21.9	19,732	12.8	9,636	10,096	0.23
20	0.33	7.05	19.4	23,226	12.8	11,563	11,662	0.27
30	0.50	5.77	15.8	28,500	12.8	15,418	13,082	0.30
40	0.67	4.92	13.5	32,426	12.8	19,272	13,153	0.30
50	0.83	4.32	11.9	35,551	12.8	23,127	12,424	0.29
60	1.00	3.86	10.6	38,149	12.8	26,981	11,168	0.26
90	1.50	2.97	8.2	44,070	12.8	38,545	5,525	0.13
				MAXIMUM REQUIRED STORAGE =			13,153	0.30

DRAINAGE AREA CALCULATIONS

DRAINAGE AREA NO.	RUNOFF COEFF. "C"	RAINFALL INTENSITY "I" I_{100}	TC (MIN.)	AREA (AC.)	Q_{100} (CFS)	COLLECTION POINT
A1	0.90	9.27	10	0.27	2.3	GRATE INLET
A2	0.90	9.27	10	2.05	17.1	EXISTING CURB INLET "E"
BLDG-A	0.90	9.27	10	0.22	1.8	PROPOSED ROOF DRAIN SYSTEM
BLDG-B1	0.90	9.27	10	0.50	4.2	PROPOSED ROOF DRAIN SYSTEM
BLDG-B2	0.90	9.27	10	0.50	4.2	PROPOSED ROOF DRAIN SYSTEM
BLDG-C	0.90	9.27	10	0.10	0.8	PROPOSED ROOF DRAIN SYSTEM
BLDG-D1	0.90	9.27	10	0.19	1.6	PROPOSED ROOF DRAIN SYSTEM
BLDG-D2	0.90	9.27	10	2.25	18.8	PROPOSED ROOF DRAIN SYSTEM
BLDG-E	0.90	9.27	10	0.24	2.0	PROPOSED ROOF DRAIN SYSTEM
SUBTOTAL LINE "A"				6.32	52.7	
B	0.90	9.27	10	1.36	11.3	EXISTING CURB INLET "H"
SUBTOTAL LINE "B"				1.36	11.3	
C	0.90	9.27	10	0.51	4.3	EXISTING CURB INLET "G"
SUBTOTAL LINE "C"				0.51	4.3	
OS1	0.90	9.27	10	0.03	0.3	OFFSITE
OS2	0.90	9.27	10	0.09	0.8	OFFSITE
OS3	0.90	9.27	10	1.07	8.9	OFFSITE
OS4	0.90	9.27	10	0.24	2.0	OFFSITE
OS5	0.90	9.27	10	0.61	5.1	OFFSITE
OS6	0.90	9.27	10	0.11	0.9	OFFSITE
OS7	0.90	9.27	10	0.14	1.2	OFFSITE
OS8	0.90	9.27	10	0.04	0.3	OFFSITE

UNDERGROUND STORAGE PROVIDED

UNDERGROUND STORAGE PROVIDED				
STORM LINE	LENGTH (FEET)	WIDTH (FEET)	HEIGHT (FEET)	VOLUME (CUBIC FEET)
STORM SEWER LINE A	330	8	5	13200
Total				13200

FLOODPLAIN NOTE

AS DETERMINED BY THE FLOOD INSURANCE RATE MAPS FOR DALLAS COUNTY, THE SUBJECT PROPERTY DOES NOT APPEAR TO LIE WITHIN A SPECIAL FLOOD HAZARD AREA (100 YEAR FLOOD), MAP DATE 08/23/01 COMMUNITY PANEL NO. 48113C0180 J, SUBJECT LOT IS LOCATED IN ZONE "X". IF THIS SITE IS NOT WITHIN AN IDENTIFIED FLOOD HAZARD AREA, THIS FLOOD STATEMENT DOES NOT IMPLY THAT THE PROPERTY AND/OR STRUCTURES THEREON WILL BE FREE FROM FLOODING OR FLOOD DAMAGE. ON RARE OCCASIONS, GREATER FLOODS CAN AND WILL OCCUR AND FLOOD HEIGHTS MAY BE INCREASED BY MAN-MADE OR NATURAL CAUSES. THIS FLOOD STATEMENT SHALL NOT CREATE LIABILITY ON THE PART OF THE SURVEYOR OR ENGINEER.

LEGEND

A	AREA DESIGNATION
2.44	AREA (AC.)
20.4	Q_{100}(cfs)
	DRAINAGE AREA BOUNDARY
	FLOW ARROWS
696	EXISTING CONTOURS
695	PROPOSED CONTOURS

RECORD DRAWINGS
(May 2014)
Information Provided By:
BOB MOORE CONSTRUCTION

BENCHMARKS

BM 5 "⊠" SET ON NORTHWEST CORNER OF CONCRETE PAD FOR SWB TELEPHONE BOX, 15'± EAST OF NORTHBOUND DALLAS NORTH TOLLWAY ACCESS ROAD AND 1,450'± SOUTH OF BELT LINE ROAD.

ELEV=635.30

BM 6 "⊠" SET ON SOUTHEAST CORNER OF CURB INLET; 15'± WEST OF MONTFORT DRIVE AND 750'± SOUTH OF SAKOWITZ DRIVE.

ELEV=603.67

BM 9 "⊠" SET ON SOUTHEAST CORNER OF CURB INLET ON EAST SIDE OF DALLAS NORTH TOLLWAY ACCESS ROAD AND 300'± SOUTH OF BELT LINE ROAD.

ELEV=627.34

N
W E
S
0 60' 120'
GRAPHIC SCALE 60'

No.	REVISIONS	DATE	BY

Kimley-Horn and Associates, Inc.
State of Texas Registration No. F-928
5750 GENESIS COURT, SUITE 200, FRISCO, TX 75034
PHONE: 972-335-3580 FAX: 972-335-3779
WWW.KIMLEY-HORN.COM

STATE OF TEXAS
ROY BRASWELL
104908
LICENSED
PROFESSIONAL ENGINEER
7/14/13

KHA PROJECT 063319038
DATE 07/16/2013
SCALE AS SHOWN
DESIGNED BY TBB
DRAWN BY AAE
CHECKED BY TBB

VILLAGE ON THE PARKWAY PHASE II
ADDISON, TEXAS

DRAINAGE AREA MAP

SHEET NUMBER
C-09

PLOTTED BY WHITE, SARAH BETH 7/16/2013 10:24 AM
DWG NAME K:\FRI_CIVIL\063319038-VOTPWKP\PLAN SET PHASE II\C-09-DRAIN.DWG [C-09 DRAINAGE AREA MAP]
LAST SAVED 07/09/2013 3:07 PM
This document, together with the concepts and designs presented herein, as an instrument of service, is intended only for the specific purpose and client for which it was prepared. Reuse of and improper reliance on this document without written authorization and adaptation by Kimley-Horn and Associates, Inc. shall be without liability to Kimley-Horn and Associates, Inc.

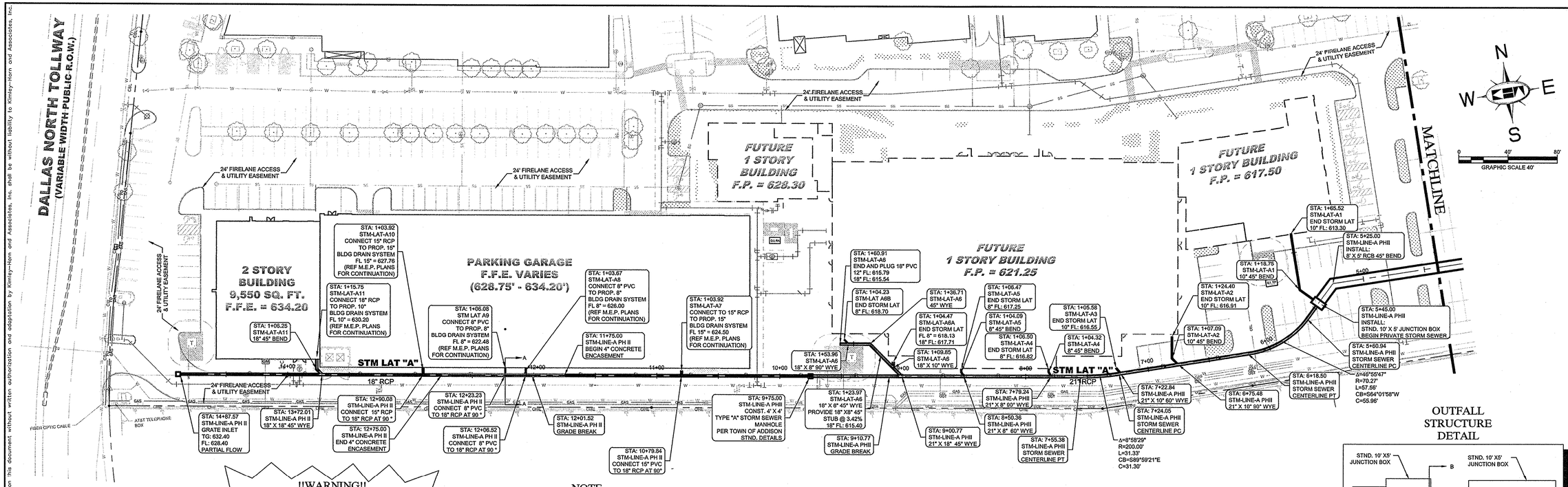

!!WARNING!!

EXISTING UTILITIES IN THE AREA. CONTRACTOR SHALL FIELD VERIFY THE LOCATION OF ALL EXISTING UTILITIES WITH THE PROVIDER PRIOR TO START OF CONSTRUCTION AND SHALL IMMEDIATELY NOTIFY THE ENGINEER OF ANY CONFLICTS DISCOVERED. CONTRACTOR IS RESPONSIBLE FOR COORDINATING UTILITY RELOCATION WHERE NECESSARY AND PROTECTING EXISTING UTILITIES (SHOWN OR NOT SHOWN). IF ANY EXISTING UTILITIES ARE DAMAGED, THE CONTRACTOR SHALL REPLACE THEM AT THEIR OWN EXPENSE.

NOTE

STORM SEWER LINE "A" IS A PRIVATE LINE FROM STATION 5+45.00 TO STATION 14+87.57. PRIVATE STORM SEWER SHALL BE MAINTAINED BY THE OWNER.

STOP!

CALL BEFORE YOU DIG

DIG TESS

1-800-DIG-TESS

(at least 72 hours prior to digging)

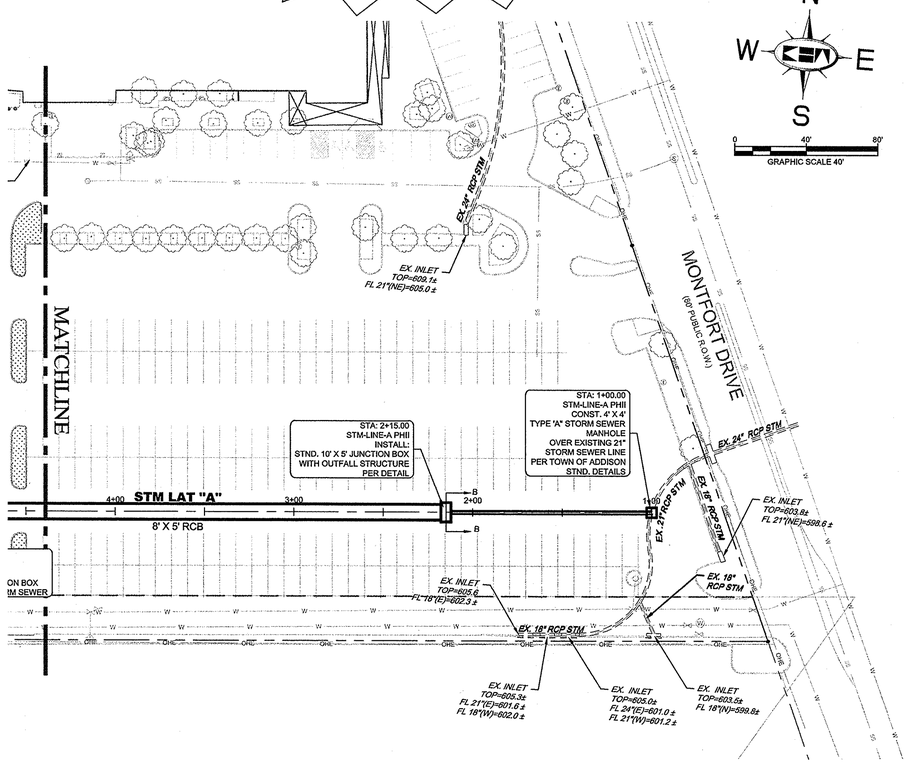

IN-GROUND DETENTION SYSTEM OUTLET CALCULATIONS

Use orifice equation to determine flow.
Q = C * A * (2 g * h)^ (1/2)
A = area of opening
C = discharge coefficient = 0.60
h = water level height above center of opening

Opening 1	
radius =	0.49 ft
area =	0.76 SF
base elev =	600.15 ft

	Weir		Orifice				
WSEL	H1	Q1	H1	Q1	Q total	Event	Q allow
600.15	0.00	0.0	0.00	0.0	0.00	OPENING 1	
600.25	0.10	0.0	0.00	0.0	0.00		
600.35	0.20	0.0	0.00	0.0	0.00		
600.45	0.30	0.0	0.00	0.0	0.00		
600.55	0.40	0.0	0.00	0.0	0.00		
600.65	0.50	0.0	0.26	1.8	1.83		
600.75	0.60	0.0	0.36	2.2	2.15		
600.85	0.00	0.0	0.46	2.4	2.44		
600.95	0.00	0.0	0.56	2.7	2.69		
601.05	0.00	0.0	0.66	2.9	2.92		
601.15	0.00	0.0	0.76	3.1	3.14		
601.25	0.00	0.0	0.86	3.3	3.34		
601.35	0.00	0.0	0.96	3.5	3.53		
601.45	0.00	0.0	1.06	3.7	3.71		
601.55	0.00	0.0	1.16	3.9	3.88		
601.65	0.00	0.0	1.26	4.0	4.05		
601.75	0.00	0.0	1.36	4.2	4.20		
601.85	0.00	0.0	1.46	4.4	4.36		
601.95	0.00	0.0	1.56	4.5	4.50		
602.05	0.00	0.0	1.66	4.6	4.65		
602.15	0.00	0.0	1.76	4.8	4.78		
602.25	0.00	0.0	1.86	4.9	4.92		
602.35	0.00	0.0	1.96	5.1	5.05		
602.45	0.00	0.0	2.06	5.2	5.18		
602.55	0.00	0.0	2.16	5.3	5.30		
602.65	0.00	0.0	2.26	5.4	5.42		
602.75	0.00	0.0	2.36	5.5	5.54		
602.85	0.00	0.0	2.46	5.7	5.66		
602.95	0.00	0.0	2.56	5.8	5.77		
603.05	0.00	0.0	2.66	5.9	5.88		
603.15	0.00	0.0	2.76	6.0	5.99		
603.25	0.00	0.0	2.86	6.1	6.10		
603.35	0.00	0.0	2.96	6.2	6.21		
603.45	0.00	0.0	3.06	6.3	6.31		
603.55	0.00	0.0	3.16	6.4	6.42		
603.65	0.00	0.0	3.26	6.5	6.52		
603.75	0.00	0.0	3.36	6.6	6.62		
603.85	0.00	0.0	3.46	6.7	6.71		
603.95	0.00	0.0	3.56	6.8	6.81		
604.05	0.00	0.0	3.66	6.9	6.90		
611.55	0.00	0.0	11.16	12.1	12.06		
611.65	0.00	0.0	11.26	12.1	12.12		
611.75	0.00	0.0	11.36	12.2	12.17		
611.85	0.00	0.0	11.46	12.2	12.22		
611.95	0.00	0.0	11.56	12.3	12.28		
612.05	0.00	0.0	11.66	12.3	12.33		
612.15	0.00	0.0	11.76	12.4	12.38		
612.25	0.00	0.0	11.86	12.4	12.43		
612.35	0.00	0.0	11.96	12.5	12.49		
612.45	0.00	0.0	12.06	12.5	12.54		
612.55	0.00	0.0	12.16	12.6	12.59		
612.65	0.00	0.0	12.26	12.6	12.64		
612.75	0.00	0.0	12.36	12.7	12.69		
612.85	0.00	0.0	12.46	12.7	12.74		
612.95	0.00	0.0	12.56	12.8	12.80		
613.05	0.00	0.0	12.66	12.8	12.85	100-yr	12.85

TRASH RACK DETAIL

N.T.S.

1. 1/4" x 4" STEEL PLATE (TYP. ALL SIDES)
2. 1"X1" STEEL ANGLES ALONG TOP EDGES
3. EXPANDED 1 1/2" METAL MESH.
4. WELD EXPANDED METAL TO INSIDE ANGLES, TOP AND SIDES TACK WELD AT ALL POINTS OF CONTACT WITH STEEL PLATES.
5. PROVIDE FULL CONTINUOUS WELD AT PLATE CONNECTIONS WITH ANGLE IRON
6. DRILL HOLES (2 EACH PLATE) SECURE WITH 1/4"X4" GALVANIZED STEEL EXPANSION ANCHORS
7. ORIFICE PLATE (PER DETAIL).

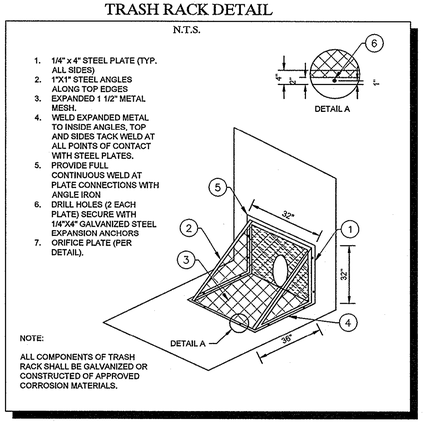

NOTE:

ALL COMPONENTS OF TRASH RACK SHALL BE GALVANIZED OR CONSTRUCTED OF APPROVED CORROSION MATERIALS.

ORIFICE PLATE DETAIL

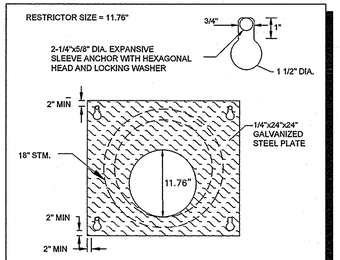

N.T.S.

OUTFALL STRUCTURE DETAIL

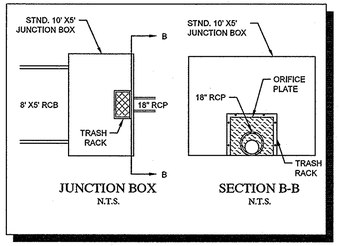

JUNCTION BOX
N.T.S.

SECTION B-B
N.T.S.

RECORD DRAWINGS (May 2014)
Information Provided By:
BOB MOORE CONSTRUCTION

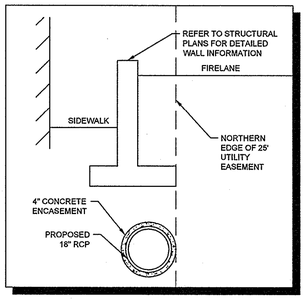

SECTION A-A
N.T.S.

NOTE

PRIOR TO CONSTRUCTION, CONTRACTOR TO NOTIFY ENGINEER IMMEDIATELY SHOULD THERE BE ANY DISCREPANCIES OR IF EXISTING FIELD CONDITIONS VARY FROM THOSE SHOWN ON THESE PLANS.

BENCHMARKS

BM 5 "⊠" SET ON NORTHWEST CORNER OF CONCRETE PAD FOR SWB TELEPHONE BOX, 15'± EAST OF NORTHBOUND DALLAS NORTH TOLLWAY ACCESS ROAD AND 1,450'± SOUTH OF BELT LINE ROAD.

ELEV=635.30

BM 6 "⊠" SET ON SOUTHEAST CORNER OF CURB INLET; 15'± WEST OF MONTFORT DRIVE AND 750'± SOUTH OF SAKOWITZ DRIVE.

ELEV=603.67

BM 9 "⊠" SET ON SOUTHEAST CORNER OF CURB INLET ON EAST SIDE OF DALLAS NORTH TOLLWAY ACCESS ROAD AND 300'± SOUTH OF BELT LINE ROAD.

ELEV=627.34

No.	REVISIONS	DATE	BY

Kimley-Horn and Associates, Inc.
State of Texas Registration No. F-928
5750 GENESIS COURT, SUITE 200, FRISCO, TX 75034
PHONE: 972-335-3580 FAX: 972-335-3779
WWW.KIMLEY-HORN.COM

STATE OF TEXAS
ROY BRASWELL
104908
LICENSED PROFESSIONAL ENGINEER
7/16/13

KHA PROJECT 063319038	
DATE 07/16/2013	
SCALE AS SHOWN	DESIGNED BY TBB
	DRAWN BY AAE
	CHECKED BY TBB

VILLAGE ON THE PARKWAY PHASE II
ADDISON, TEXAS

STORM SEWER PLAN

SHEET NUMBER
C-10

PLOTTED BY WHITE, SARAH BETH 7/16/2013 10:25 AM
DWG NAME K:\FRI_CIV\063319038-VOPW\DWG\PLAN SET PHASE II\C-10-STORM SEWER PLAN.DWG [C-11 STORM SEWER PLAN]
LAST SAVED 7/16/2013 9:59 AM
This document, together with the concepts and designs presented herein, as an instrument of service, is intended only for the specific purpose and client for which it was prepared. Reuse of and improper reliance on this document without written authorization and adaptation by Kimley-Horn and Associates, Inc. shall be without liability to Kimley-Horn and Associates, Inc.

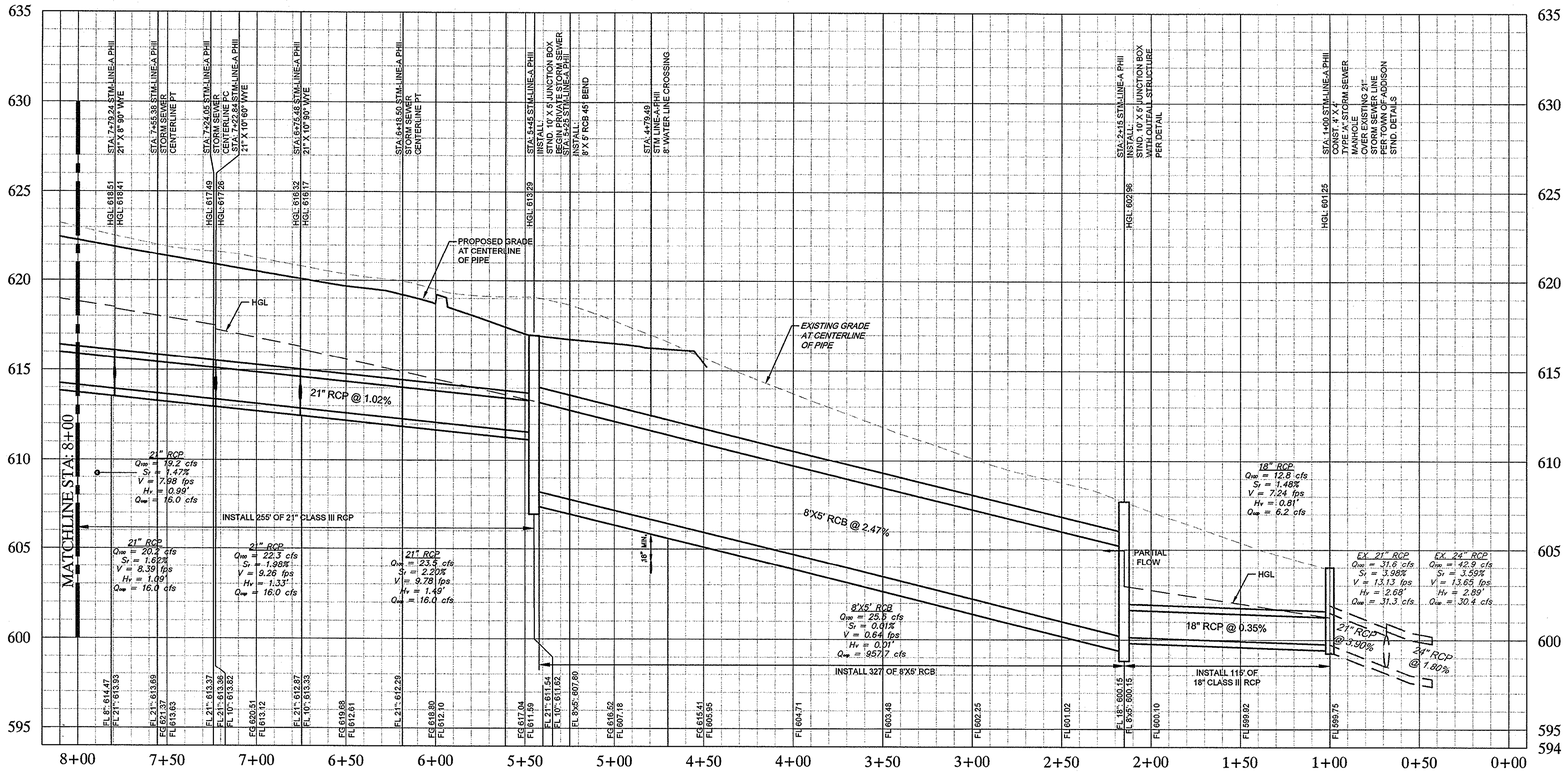

STORM LINE "A" (STA: 1+00 - 8+00)

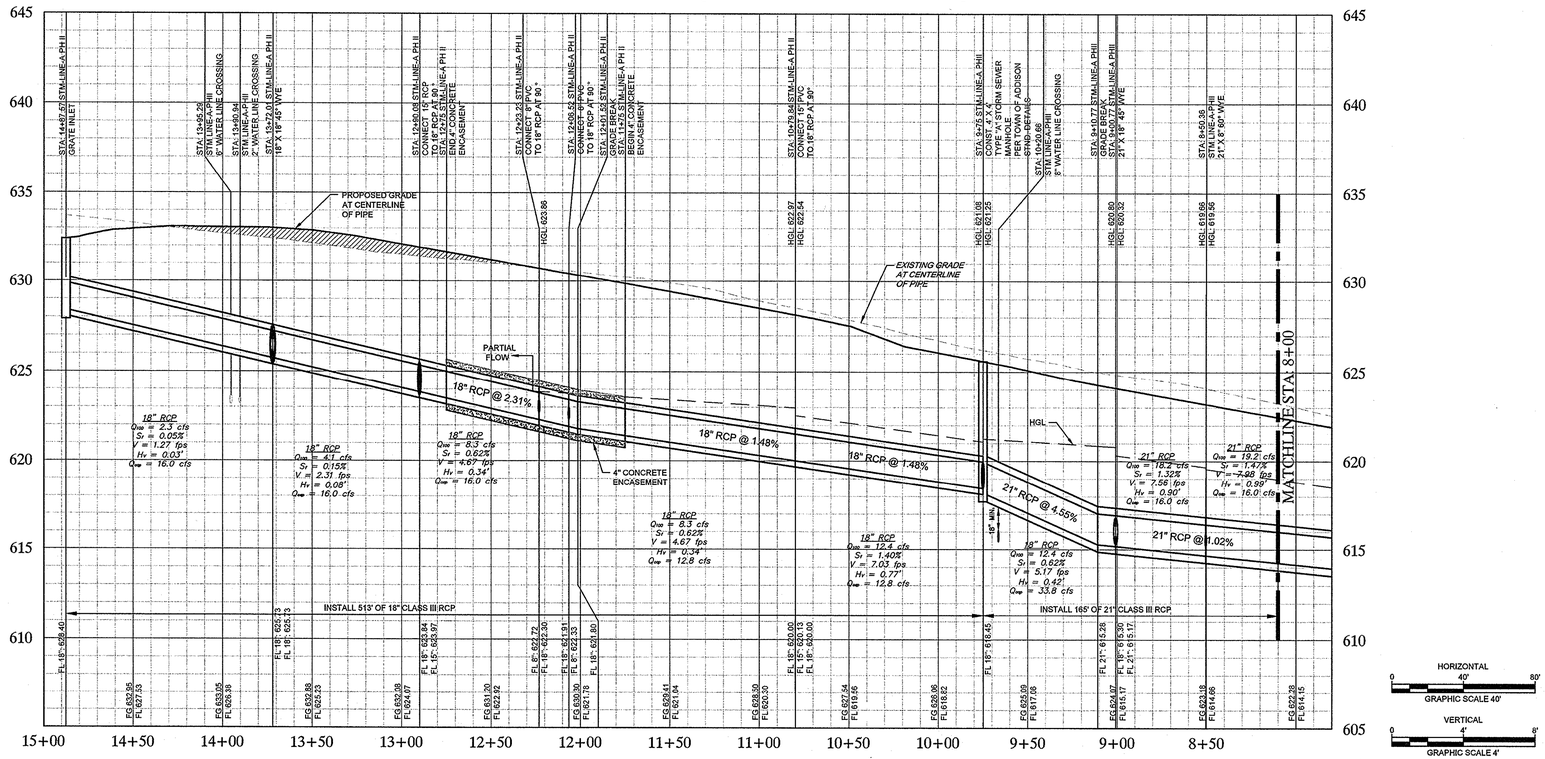

STORM LINE "A" (STA: 8+00 - END)

RECORD DRAWINGS (May 2014)
Information Provided By:
BOB MOORE CONSTRUCTION

NOTE

PRIOR TO CONSTRUCTION, CONTRACTOR TO NOTIFY ENGINEER IMMEDIATELY SHOULD THERE BE ANY DISCREPANCIES OR IF EXISTING FIELD CONDITIONS VARY FROM THOSE SHOWN ON THESE PLANS.

!!WARNING!!

EXISTING UTILITIES IN THE AREA. CONTRACTOR SHALL FIELD VERIFY THE LOCATION OF ALL EXISTING UTILITIES WITH THE PROVIDER PRIOR TO START OF CONSTRUCTION AND SHALL IMMEDIATELY NOTIFY THE ENGINEER OF ANY CONFLICTS DISCOVERED. CONTRACTOR IS RESPONSIBLE FOR COORDINATING UTILITY RELOCATION WHERE NECESSARY AND PROTECTING EXISTING UTILITIES (SHOWN OR NOT SHOWN). IF ANY EXISTING UTILITIES ARE DAMAGED, THE CONTRACTOR SHALL REPLACE THEM AT THEIR OWN EXPENSE.

STOP!
CALL BEFORE YOU DIG
DIG TESS
1-800-DIG-TESS
(at least 72 hours prior to digging)

BENCHMARKS

BM 5 "⊠" SET ON NORTHWEST CORNER OF CONCRETE PAD FOR SWB TELEPHONE BOX, 15'± EAST OF NORTHBOUND DALLAS NORTH TOLLWAY ACCESS ROAD AND 1,450'± SOUTH OF BELT LINE ROAD.

ELEV=635.30

BM 6 "⊠" SET ON SOUTHEAST CORNER OF CURB INLET; 15'± WEST OF MONTFORT DRIVE AND 750'± SOUTH OF SAKOWITZ DRIVE.

ELEV=603.67

BM 9 "⊠" SET ON SOUTHEAST CORNER OF CURB INLET ON EAST SIDE OF DALLAS NORTH TOLLWAY ACCESS ROAD AND 300'± SOUTH OF BELT LINE ROAD.

ELEV=627.34

No.	REVISIONS	DATE	BY
1	UPDATED STORM CONNECTION	11/15/2012	TBB

Kimley-Horn and Associates, Inc.
State of Texas Registration No. F-928
5750 GENESIS COURT, SUITE 200, FRISCO, TX 75034
PHONE: 972-335-3580 FAX: 972-335-3779
WWW.KIMLEY-HORN.COM

STATE OF TEXAS — ROY BRASWELL 104908 — LICENSED PROFESSIONAL ENGINEER — 7/24/13

KHA PROJECT	063319038
DATE	07/16/2013
SCALE	AS SHOWN
DESIGNED BY	TBB
DRAWN BY	AAE
CHECKED BY	TBB

VILLAGE ON THE PARKWAY PHASE II
ADDISON, TEXAS

STORM SEWER PROFILES

SHEET NUMBER
C-11

PLOTTED BY WHITE, SARAH [RPI]
DWG NAME K:\FRI_CIVIL\063190S-VOPDWG\PLAN SET PHASE III\C-11-STM-PROF.DWG [C-12 STORM SEWER PROFILES]
LAST SAVED 7/16/2013 10:25 AM
This document, together with the concepts and designs presented herein, as an instrument of service, is intended only for the specific purpose and client for which it was prepared. Reuse of and improper reliance on this document without written authorization and adaptation by Kimley-Horn and Associates, Inc. shall be without liability to Kimley-Horn and Associates, Inc.

STORM CALCULATIONS

RUNOFF COLLECTION POINT		Distance Between Collection Points	DRAINAGE AREA			Runoff Coeff.	Accum.	Intensity	STORMWATER RUNOFF		PROPOSED STORM SEWER				Proposed Storm Sewer Slope	Slope of Hydraulic Gradient Based on Pipe Size	Full Flow Capacity	Q·· Flow Velocity	Head Loss Coeff.	Velocity Head Loss at Upstream Station	Pipe Flowline Elev.	Pipe Flowline Elev.	Top of Pipe Elev.	Top of Pipe Elev.	Hg Elev.	Hg Elev.	Full/Partial Flow
Downstream Station	Upstream Station	"L" (feet)	Drainage Area Name	Increm. "A" (acres)	Accum. "A" (acres)	"C"	"CA" (acres)	"I" (in./hr.)	Increm. "Q" (c.f.s.)	Accum. "Q" (c.f.s.)	Pipe or Box	Round Pipe Diameter "d" (in.)	Rectangular Box Width "w" (ft.)	Rectangular Box Height "h" (ft.)	S_p (ft/ft.)	"S" (ft/ft.)	"C" (c.f.s.)	V_c (f.p.s.)	K_j	$\frac{V_2^2 - K_j V_1^2}{2g}$ (feet)	Downstream (feet)	Upstream (feet)	Downstream (feet)	Upstream (feet)	Downstream (feet)	Upstream (feet)	
1	2	3	4	5	6	7	8	9	10	11	12	13	14	15	16	17	18	21	27	28	30	29	32	31	34	33	35
Storm Sewer Line A																											
14+87.57																							629.90		624.79		PARTIAL
	14+87.57	115.56	A1	0.27	0.27	0.90	0.24	9.27	2.3	2.3	Pipe	18	-	-	0.0231	0.0005	16.0	1.27	0.35	0.03		628.40		629.90		624.76	
13+72.01																					625.73		627.23		624.71		PARTIAL
	13+72.01	81.93	BLDGA	0.22	0.49	0.90	0.44	9.27	1.8	4.1	Pipe	18	-	-	0.0231	0.0015	16.0	2.31	0.35	0.06		625.73		627.23		624.65	
12+90.08																					623.84		625.34		624.53		PARTIAL
	12+90.08	66.85	BLDG-B1	0.50	0.99	0.90	0.89	9.27	4.2	8.3	Pipe	18	-	-	0.0231	0.0062	16.0	4.67	1.00	0.26		623.84		625.34		624.27	
12+23.23																					622.30		623.80		623.86		FULL
	12+23.23	16.71	Garage Drain	0.00	0.99	0.90	0.89	9.27	0.0	8.3	Pipe	18	-	-	0.0231	0.0062	16.0	4.67	1.00	0.00		622.30		623.80		623.86	
12+06.52																					621.91		623.41		623.76		FULL
	12+06.52	5.00	Garage Drain	0.00	0.99	0.90	0.89	9.27	0.0	8.3	Pipe	18	-	-	0.0231	0.0062	16.0	4.67	1.00	0.00		621.91		623.41		623.76	
12+01.52																					621.80		623.30		623.73		FULL
	12+01.52	121.68	Grade Break	0.00	0.99	0.90	0.89	9.27	0.0	8.3	Pipe	18	-	-	0.0148	0.0062	12.8	4.67	1.00	0.00		621.80		623.30		623.73	
10+79.84																					619.99		621.49		622.97		FULL
	10+79.84	104.84	BLDG-B2	0.50	1.49	0.90	1.34	9.27	4.2	12.4	Pipe	18	-	-	0.0148	0.0140	12.8	7.03	1.00	0.43		619.99		621.49		622.54	
9+75.00																					618.44		619.94		621.08		FULL
	9+75.00	64.23	BLDGA	0.00	1.49	0.90	1.34	9.27	0.0	12.4	Pipe	21	-	-	0.0455	0.0062	33.8	5.17	0.15	-0.18		618.19		619.94		621.25	
9+10.77																					615.27		617.02		620.86		FULL
	9+10.77	10.00	Grade Break	0.00	1.49	0.90	1.34	9.27	0.0	12.4	Pipe	21	-	-	0.0102	0.0062	16.0	5.17	1.00	0.00		615.27		617.02		620.86	
9+00.77																					615.17		616.92		620.80		FULL
	9+00.77	50.41	BLDG-C, BLDG-D1, BLDG-D2	0.69	2.18	0.90	1.96	9.27	5.8	18.2	Pipe	21	-	-	0.0102	0.0132	16.0	7.56	1.00	0.47		615.17		616.92		620.32	
8+50.36																					614.65		616.40		619.66		FULL
	8+50.36	71.12	BLDG-D2	0.12	2.30	0.90	2.07	9.27	1.0	19.2	Pipe	21	-	-	0.0102	0.0147	16.0	7.98	1.00	0.10		614.65		616.40		619.56	
7+79.24																					613.93		615.68		618.51		FULL
	7+79.24	56.40	BLDG-D2	0.12	2.42	0.90	2.18	9.27	1.0	20.2	Pipe	21	-	-	0.0102	0.0162	16.0	8.39	1.00	0.11		613.93		615.68		618.41	
7+22.84																					613.35		615.10		617.49		FULL
	7+22.84	47.36	BLDG-D2	0.25	2.67	0.90	2.40	9.27	2.1	22.3	Pipe	21	-	-	0.0102	0.0198	16.0	9.26	1.00	0.24		613.35		615.10		617.26	
6+75.48																					612.87		614.62		616.32		FULL
	6+75.48	130.48	BLDG-D2	0.15	2.82	0.90	2.54	9.27	1.3	23.5	Pipe	21	-	-	0.0102	0.0220	16.0	9.78	1.00	0.15		612.87		613.29		616.17	
5+45.00																					611.54		613.29		613.29		PARTIAL
	5+45.00	20.00	BLDG-E	0.24	3.06	0.90	2.75	9.27	2.0	25.5	Box	-	8	5	0.0247	0.0000	957.7	0.64	1.00	NA		608.30		613.30		602.96	
5+25.00																					607.81		612.81		602.96		PARTIAL
	5+25.00	310.00	45° BEND	0.00	3.06	0.90	2.75	9.27	0.0	25.5	Box	-	8	5	0.0247	0.0000	957.7	0.64	1.00	NA		607.81		612.81		602.96	
2+15.00																					600.15		605.15		602.96		PARTIAL
	2+15.00	115.00	Detention Outfall	0.00	3.06	0.90	2.75	9.27	0.0	12.8	Pipe	18	-	-	0.0035	0.0148	6.2	7.24	1.25	NA		600.15		601.65		602.96	
1+00.00																					599.75		601.25		601.25		FULL

RECORD DRAWINGS (May 2014)
Information Provided By:
BOB MOORE CONSTRUCTION

No.	REVISIONS	DATE	BY

Kimley-Horn and Associates, Inc.
State of Texas Registration No. F-928
5750 GENESIS COURT, SUITE 200, FRISCO, TX 75034
PHONE: 972-335-3580 FAX: 972-335-3779
WWW.KIMLEY-HORN.COM

STATE OF TEXAS
ROY BRASWELL
104908
LICENSED
PROFESSIONAL ENGINEER
7/16/13

KHA PROJECT 063319038
DATE 07/16/2013
SCALE AS SHOWN
DESIGNED BY TBB
DRAWN BY AAE
CHECKED BY TBB

VILLAGE ON THE PARKWAY PHASE II
ADDISON, TEXAS

STORM CALCULATIONS

SHEET NUMBER
C-12

PLOTTED BY WHITE, SARAH BETH 7/16/2013 10:25 AM
DWG NAME K:\DFW_CIVIL\063319038-VOPD\DWG\PLAN SET\PHASE II\C-12-STM-CALCS.DWG [C-02-GENERAL NOTES]
LAST SAVED 7/16/2013 10:12 AM
This document, together with the concepts and designs presented herein, as an instrument of service, is intended only for the specific purpose and client for which it was prepared. Reuse of and improper reliance on this document without written authorization and adaptation by Kimley-Horn and Associates, Inc. shall be without liability to Kimley-Horn and Associates, Inc.

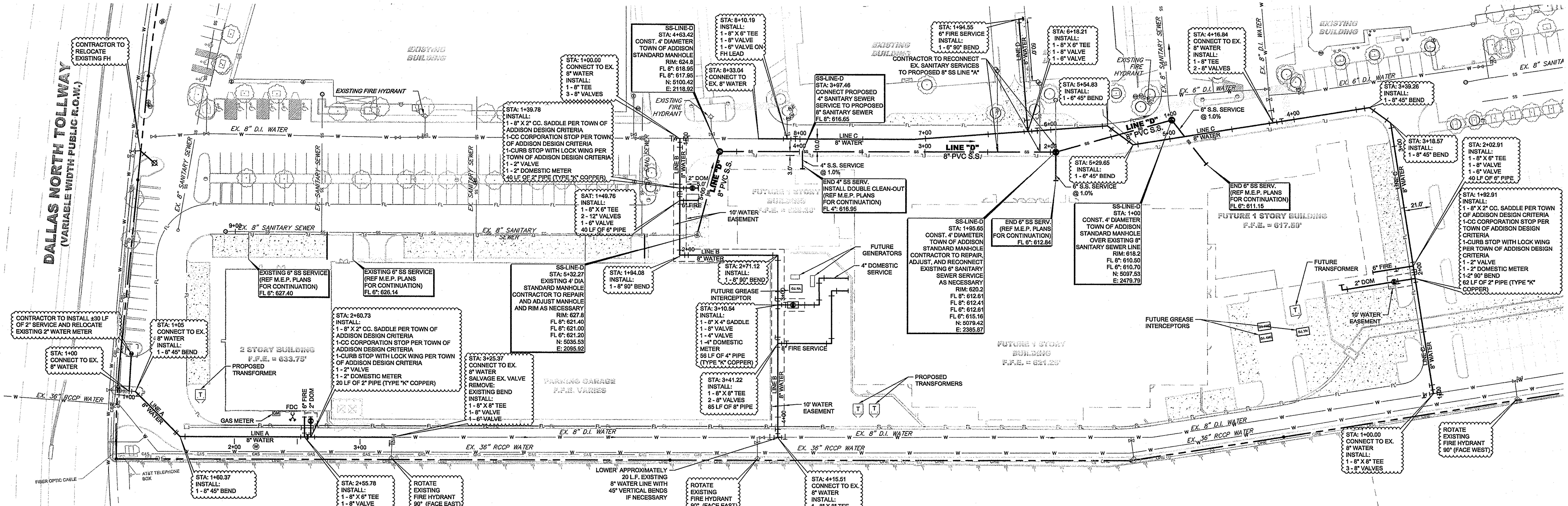

RECORD DRAWINGS
(October 2013)
Information Provided By:
BOB MOORE CONSTRUCTION

HORIZONTAL
0 40' 80'
GRAPHIC SCALE 40'

VERTICAL
0 4' 8'
GRAPHIC SCALE 4'

0 40' 80'
GRAPHIC SCALE 40'

N E S W

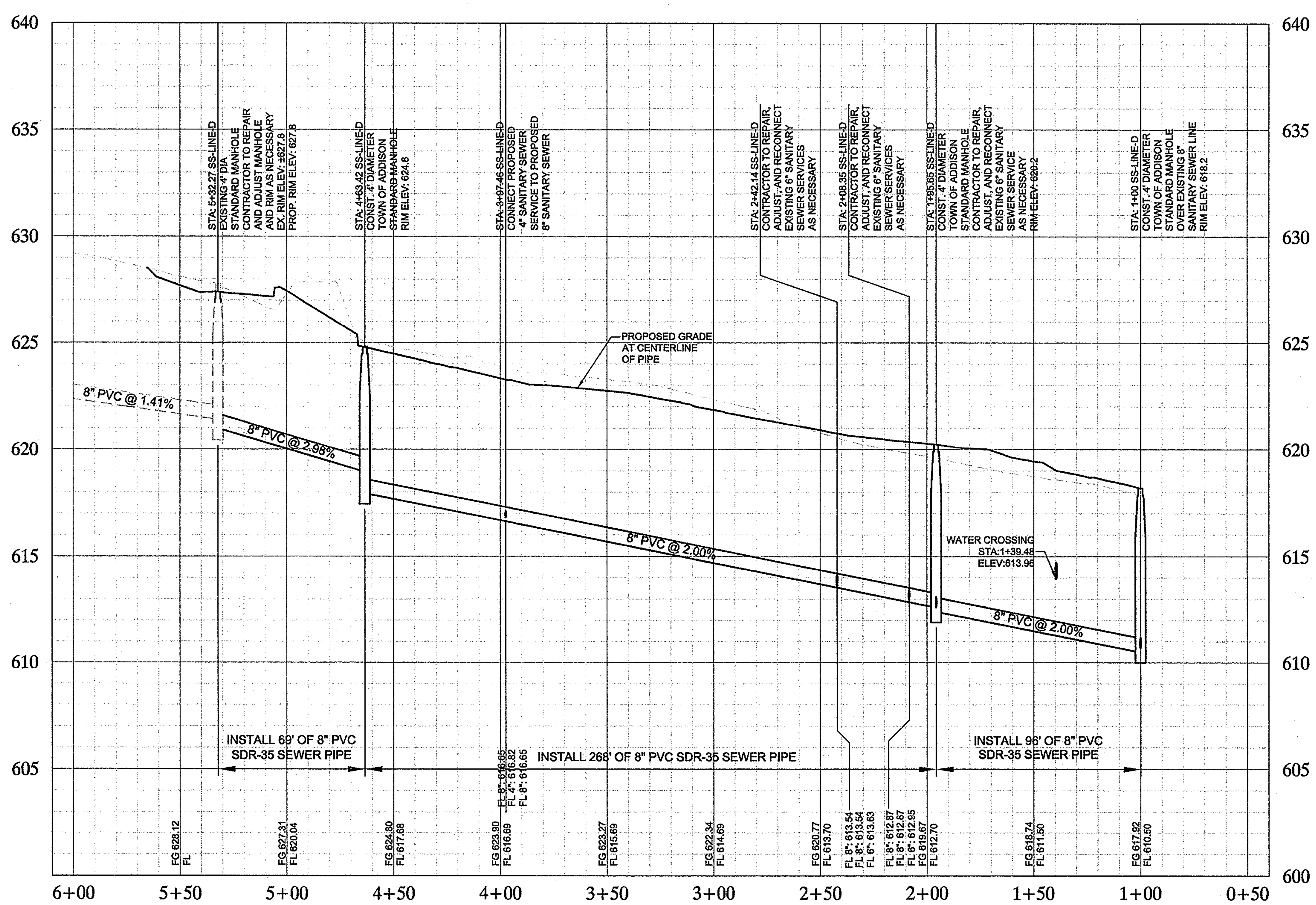

LEGEND

Symbol	Description
———	PROPOSED WATER
— SS —	PROPOSED SANITARY SEWER
═══	PROPOSED STORM SEWER
— OHE —	EXISTING OVERHEAD POWER
— CBL —	EXISTING CABLE
— GAS —	EXISTING GAS
— UGT —	EXISTING UNDERGROUND TELEPHONE
— FO —	EXISTING FIBER OPTIC CABLE
— UGE —	EXISTING UNDERGROUND ELECTRIC
— W —	EXISTING WATER
— SS —	EXISTING SANITARY SEWER
Ⓢ	PROPOSED SANITARY SEWER MANHOLE
□	PROPOSED STORM SEWER JUNCTION BOX
⊕	PROPOSED FIRE HYDRANT
●	PROPOSED METER
Ⓦ	EXISTING METER
⊛	EXISTING IRRIGATION METER
⊕	EXISTING FIRE HYDRANT
◎	EXISTING CLEAN OUT
Ⓢ	EXISTING MANHOLE

NOTE

PRIOR TO CONSTRUCTION, CONTRACTOR TO NOTIFY ENGINEER IMMEDIATELY SHOULD THERE BE ANY DISCREPANCIES OR IF EXISTING FIELD CONDITIONS VARY FROM THOSE SHOWN ON THESE PLANS.

FIRE SPRINKLER NOTE

FIRE SPRINKLER LINE SHALL BE SIZED AND INSTALLED BY A STATE LICENSED FIRE SPRINKLER CONTRACTOR

!!WARNING!!

EXISTING UTILITIES IN THE AREA. CONTRACTOR SHALL FIELD VERIFY THE LOCATION OF ALL EXISTING UTILITIES WITH THE PROVIDER PRIOR TO START OF CONSTRUCTION AND SHALL IMMEDIATELY NOTIFY THE ENGINEER OF ANY CONFLICTS DISCOVERED. CONTRACTOR IS RESPONSIBLE FOR COORDINATING UTILITY RELOCATION WHERE NECESSARY AND PROTECTING EXISTING UTILITIES (SHOWN OR NOT SHOWN). IF ANY EXISTING UTILITIES ARE DAMAGED, THE CONTRACTOR SHALL REPLACE THEM AT THEIR OWN EXPENSE.

STOP!
CALL BEFORE YOU DIG
DIG TESS
1-800-DIG-TESS
(at least 72 hours prior to digging)

FRANCHISE CONTACTS

AT&T
MARCUS NELSON
972-889-4109

ONCOR
KAREN EASTMAN
817-355-7050

ATMOS
GARY DICKINSON
972-360-4428

TIME WARNER CABLE
DAVE CHENEY
214-320-7406

UTILITY NOTES

1. SEE MEP PLANS FOR ALL UTILITY CONNECTIONS INTO BUILDING.
2. WATER AND SEWER LINES SHALL STUB 5 FEET FROM BUILDING FOR SERVICE CONNECTIONS UNLESS OTHERWISE NOTED.
3. A FIVE FOOT CLEARANCE SHALL BE MAINTAINED AROUND ALL FIRE HYDRANTS. FIRE HYDRANTS SHALL BE LOCATED 3'-6' FROM BACK OF CURB PER TOWN OF ADDISON STANDARD DETAIL.
4. REFER TO TOWN OF ADDISON DETAILS FOR WATER METER, METER BOX, FIRE HYDRANTS, VALVES, VALVE BOXES AND SERVICE INSTALLATION.
5. REFER TO DETAILS FOR SANITARY SEWER MANHOLE REQUIREMENTS.
6. REFER TO DETAILS FOR TRENCHING, BEDDING, BACKFILL, AND TRENCH COMPACTION REQUIREMENTS.
7. WATER AND SANITARY SEWER PIPE SHALL BE CONSTRUCTED OF SLIP-ON OR MECHANICAL JOINT CAST OR DUCTILE IRON PIPE, OR PVC PIPE.
8. REFER TO ARCHITECTURE PLANS FOR LOCATION AND SIZING OF SLEEVES FOR FRANCHISE UTILITIES, IRRIGATION, ETC.
9. ALL PIPE DEFLECTIONS SHALL BE PER MANUFACTURER'S SPECIFICATIONS. ANY VARIATIONS SHALL BE APPROVED IN WRITING BY THE ENGINEER BEFORE INSTALLATION.
10. IT IS THE CONTRACTOR'S RESPONSIBILITY TO DEFLECT ELECTRIC, GAS, CABLE, AND TELEPHONE CONDUIT AND PIPING AS REQUIRED TO AVOID UTILITY CONFLICTS.
11. CONTRACTOR TO VERIFY IRRIGATION METER SIZE WITH LICENSED IRRIGATOR PRIOR TO INSTALLATION.
12. EXISTING HYDRANTS SHALL BE TAKEN TO TOWN OF ADDISON PUBLIC WORKS FOR REFURBISHMENT PRIOR TO BEING PUT BACK IN SERVICE/RELOCATED.
13. SALVAGED METERS SHALL BE RETURNED TO TOWN OF ADDISON PUBLIC WORKS.

BENCHMARKS

BM 5 "☒" SET ON NORTHWEST CORNER OF CONCRETE PAD FOR SWB TELEPHONE BOX, 15'± EAST OF NORTHBOUND DALLAS NORTH TOLLWAY ACCESS ROAD AND 1,450'± SOUTH OF BELT LINE ROAD.

ELEV=635.30

BM 6 "☒" SET ON SOUTHEAST CORNER OF CURB INLET; 15'± WEST OF MONTFORT DRIVE AND 750'± SOUTH OF SAKOWITZ DRIVE.

ELEV=603.67

BM 9 "☒" SET ON SOUTHEAST CORNER OF CURB INLET ON EAST SIDE OF DALLAS NORTH TOLLWAY ACCESS ROAD AND 300'± SOUTH OF BELT LINE ROAD.

ELEV=627.34

No.	REVISIONS	DATE	BY

Kimley-Horn and Associates, Inc.
State of Texas Registration No. F-928
5750 GENESIS COURT, SUITE 200, FRISCO, TX 75034
PHONE: 972-335-3580 FAX: 972-335-3779
WWW.KIMLEY-HORN.COM

STATE OF TEXAS
ROY BRASWELL
104908
LICENSED PROFESSIONAL ENGINEER
6/14/13

KHA PROJECT	063319038
DATE	06/14/2013
SCALE	AS SHOWN
DESIGNED BY	TBB
DRAWN BY	AAE
CHECKED BY	TBB

VILLAGE ON THE PARKWAY PHASE II
ADDISON, TEXAS

UTILITY PLAN & SANITARY SEWER PROFILE

SHEET NUMBER
C-13

This document, together with the concepts and designs presented herein, as an instrument of service, is intended only for the specific purpose and client for which it was prepared. Reuse of and improper reliance on this document without written authorization and adaptation by Kimley-Horn and Associates, Inc. shall be without liability to Kimley-Horn and Associates, Inc.

PLOTTED BY LUCIO, RAMIRO 6/14/2013 1:37 PM
DWG NAME K:\FRI_CIVIL\63319038-VOP\DWG\PLAN SET PHASE II\C-12-UTIL.DWG [UTILITY PLAN & SANITARY SEWER PROFILE]
LAST SAVED 6/14/2013 1:18 PM

TOWN OF ADDISON
GENERAL CONSTRUCTION NOTES

1. ALL MATERIALS AND WORKMANSHIP (WITHIN DALLAS PARKWAY RIGHT-OF-WAY) SHALL CONFORM WITH THE STANDARD SPECIFICATIONS FOR PUBLIC WORKS CONSTRUCTION FOR NORTH CENTRAL TEXAS, LATEST EDITION, AND THE CITY OF DALLAS DEPARTMENT OF PUBLIC WORKS AND TRANSPORTATION ADDENDUM.
2. DURING THE CONSTRUCTION OF THESE IMPROVEMENTS (WITHIN DALLAS PARKWAY RIGHT-OF-WAY), ANY INTERPRETATION OF THE STANDARD SPECIFICATIONS FOR PUBLIC WORKS CONSTRUCTION FOR NORTH CENTRAL TEXAS, AND ANY MATTER WHICH REQUIRES THE APPROVAL OF THE OWNER, MUST BE APPROVED BY THE DIRECTOR OF PUBLIC WORKS AND TRANSPORTATION OR HIS DESIGNEE BEFORE ANY CONSTRUCTION INVOLVING THAT DECISION COMMENCES. ASSUMPTIONS ABOUT WHAT THESE DECISIONS MIGHT BE WHICH AREA MADE DURING THE BIDDING PHASE WILL HAVE NO BEARING ON THE DECISION.
3. FOR ADJUSTMENTS OF DALLAS WATER UTILITIES APPURTENANCES OR TO VERIFY LOCATIONS OF EXISTING WATER AND WASTEWATER MAINS IN AREA, CALL (214) 670-1770 AT LEAST (3) THREE WORKING DAYS PRIOR TO CONSTRUCTION. FOR SERVICES NEEDED WITHIN THE TOWN OF ADDISON, CALL (972) 450-2871 AT LEAST (3) THREE WORKING DAYS PRIOR TO CONSTRUCTION
4. STREETS, ALLEYS, SIDEWALKS, DRIVEWAYS AND STORM DRAINAGE FACILITIES WITHIN RIGHT-OF-WAY, SHALL BE CONSTRUCTED IN CONFORMANCE WITH THE CITY OF DALLAS STANDARD CONSTRUCTION DETAILS, FILE 251D-1, LATEST EDITION.
5. ALL CONCRETE FOR PAVEMENT WITHIN DALLAS PARKWAY RIGHT-OF-WAY SHALL BE 4,000 PSI FOR MACHINE FINISH AND 4,500 PSI IF IT IS NECESSARY FOR HAND FINISH.

TRAFFIC CONTROL NOTES

1. ALL TRAFFIC CONTROL SHALL CONFORM TO THE LATEST VERSION OF THE TEXAS MANUAL ON UNIFORM TRAFFIC CONTROL DEVICES (MUTCD), PART VI. FIELD MODIFICATIONS MAY BE MADE TO ADDRESS LOCAL CONDITIONS WITH THE APPROVAL OF THE ENGINEER.
2. DESIGN SPEED OF DALLAS PARKWAY IS 40 MPH. MINIMUM SIGN SPACING IS 240'. MERGING TAPER FOR A 12' LANE IS 320' MINIMUM. CHANNELIZATION DEVICE SPACING IS AS SHOWN ON PLANS.
3. CONTRACTOR IS RESPONSIBLE FOR INSTALLATION, MAINTENANCE, AND REMOVAL OF TRAFFIC CONTROL DEVICES. TRAFFIC CONTROL DEVICES SHOULD BE INSPECTED DAILY AND REPAIRED OR REPLACED AS NECESSARY. AFTER REMOVAL, CONTRACTOR IS RESPONSIBLE FOR RESTORATION OF MODIFICATIONS TO ROADWAY AND SIDEWALK SURFACES, ROADWAY MARKINGS, AND SIGNAGE DUE TO TRAFFIC CONTROL DEVICES OR CONSTRUCTION ACTIVITY.
4. CHANNELIZATION DRUMS ARE THE MINIMUM LEVEL OF CHANNELIZATION DEVICE WHICH SHALL BE USED.
5. IF THE TCP IS ACTIVE DURING THE HOURS OF DARKNESS, ALL CHANNELIZATION DEVICES SHALL HAVE A TYPE "C" STEADY-BURN WARNING LIGHT OR EQUIVALENT REFLECTOR, AND ALL WARNING SIGNS SHALL HAVE A TYPE "A" LOW-INTENSITY FLASHING WARNING LIGHT.
6. TWO-WAY VEHICULAR TRAFFIC FLOW AND ACCESS TO ALL OCCUPIED PROPERTIES SHALL BE MAINTAINED AT ALL TIMES UNLESS NOTED. PEDESTRIAN PATHWAYS SHALL BE PROVIDED ACROSS OR AROUND THE WORK AREA IN ACCORDANCE WITH THE MUTCD.
7. WHEN THE TCP IS NOT IN EFFECT, ALL CHANNELIZING DEVICES SHALL BE REMOVED FROM THE TRAVEL LANES AND ALL SIGNS SHALL BE COVERED OR TURNED AWAY FROM THE DIRECTION OF TRAFFIC. THE TRAVEL LANE SURFACES SHALL BE RESTORED WITH STEEL PLATES OR TEMPORARY PAVEMENT. WHERE A SAW CUT OR PAVEMENT REMOVAL RESULTS IN MORE THAN A 2" DROP-OFF ADJACENT TO THE TRAVEL LANE, THE EDGE SHALL BE MARKED WITH VERTICAL PANELS OR CHANNELIZATION DRUMS AT 25' SPACING, AND WARNING SIGN CW 8-9a "SHOULDER DROP-OFF" SHALL BE POSTED 160' IN ADVANCE OF THE DROP-OFF CONDITION.

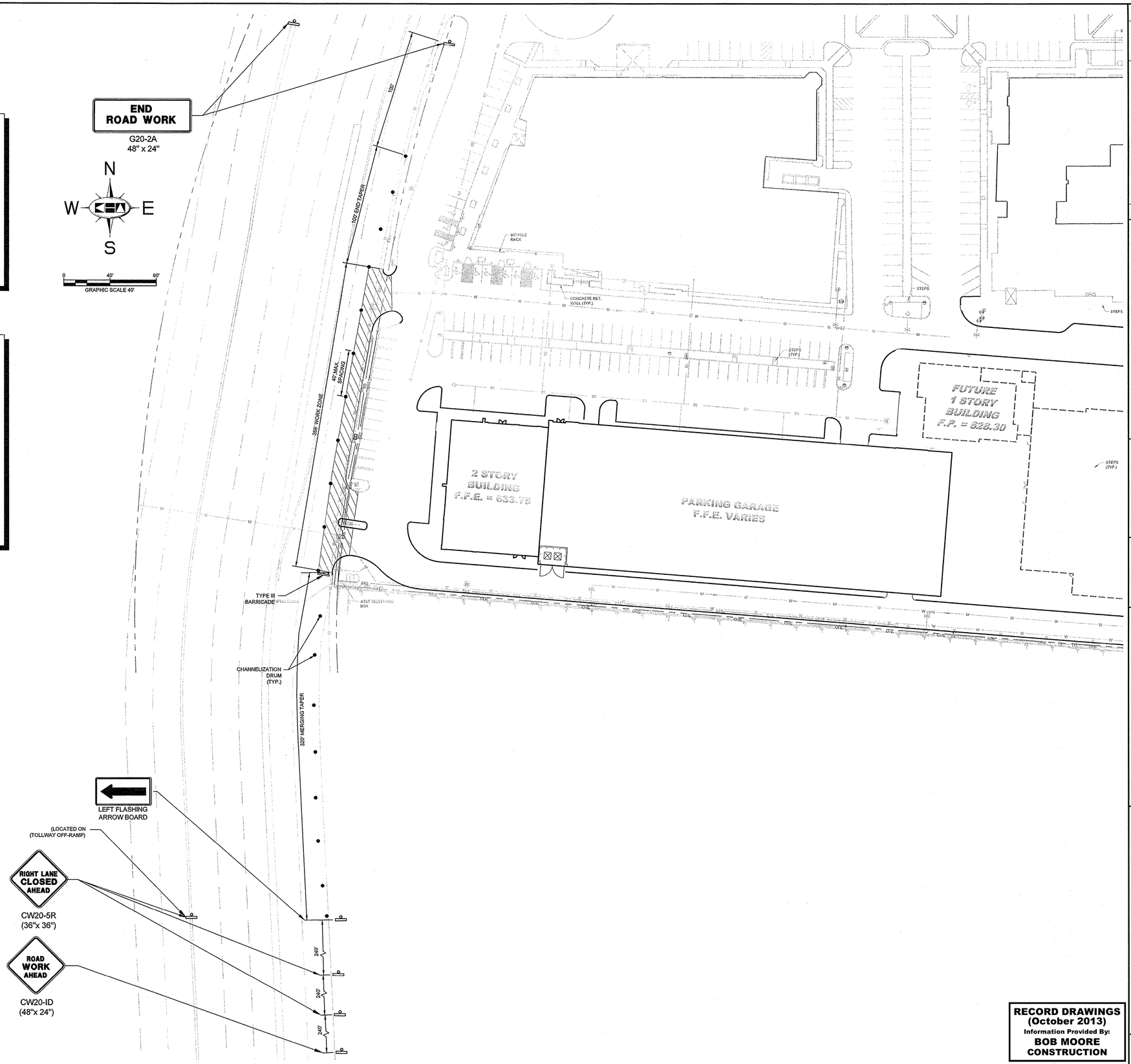

RECORD DRAWINGS
(October 2013)
Information Provided By:
BOB MOORE CONSTRUCTION

No.	REVISIONS	DATE	BY

Kimley-Horn and Associates, Inc.
State of Texas Registration No. F-928
5750 GENESIS COURT, SUITE 200, FRISCO, TX 75034
PHONE: 972-335-3580 FAX: 972-335-3779
WWW.KIMLEY-HORN.COM

STATE OF TEXAS
ROY BRASWELL
104908
LICENSED PROFESSIONAL ENGINEER
6/14/13

KHA PROJECT 063319038	
DATE 06/14/2013	
SCALE AS SHOWN	
DESIGNED BY TBB	
DRAWN BY AAE	
CHECKED BY TBB	

VILLAGE ON THE PARKWAY PHASE II
ADDISON, TEXAS

TRAFFIC CONTROL PLAN DALLAS PARKWAY

SHEET NUMBER
C-14

PLOTTED BY LUCIO, RAMIRO 6/14/2013 1:02 PM
DWG NAME K:\FRI_CIVIL\063319038\VOP2\DWG\PLAN SET PHASE II\C-13-TCP.DWG [C-13 TRAFFIC CONTROL PLAN DALLAS PARKWAY]
LAST SAVED 6/14/2013 1:18 PM
This document, together with the concepts and designs presented herein, as an instrument of service, is intended only for the specific purpose and client for which it was prepared. Reuse of and improper reliance on this document without written authorization and adaptation by Kimley-Horn and Associates, Inc. shall be without liability to Kimley-Horn and Associates, Inc.

PAVING – GENERAL NOTES

1. GENERAL:
   PAVEMENT THICKNESS IS AS SHOWN IN ITEM 7. SUBGRADE DESIGN SHALL CONFORM TO TOWN OF ADDISON PUBLIC WORKS REQUIREMENTS IN ITEM 3, AND SHALL EXTEND 12" MIN. BEHIND THE BACK OF CURB.
2. REINFORCED CONCRETE PAVEMENT:
   A. CONCRETE STRENGTH SHALL BE AS SHOWN IN ITEM 7 (NCTCOG LATEST EDITION).
   B. ALL CURBS SHALL BE INTEGRAL WITH PAVEMENT AND SHALL BE OF THE SAME STRENGTH AS CONCRETE PAVEMENT.
   C. DETAIL AND ARRANGEMENT OF PAVEMENT JOINTS, ALL TYPES, SHALL BE AS SHOWN ON THE TOWN STANDARD CONSTRUCTION DETAILS.
   D. BAR LAPS SHALL BE THIRTY DIAMETERS.
   E. REINFORCING STEEL SHALL BE #3 REBAR (3/8") ON 18" CENTERS FOR 8" OR LESS, #4 FOR 10" OR ABOVE
3. SUBGRADE:
   SUBGRADE UNDER ALL PAVEMENT SHALL BE 6" THICK AND SHALL BE STABILIZED WITH AT LEAST 30 LBS. PER SQ. YD. HYDRATED LIME, COMPACTED TO A DENSITY NOT LESS THAN 95 PERCENT. LABORATORY TESTS MUST BE SUBMITTED TO THE PUBLIC WORKS DEPARTMENT FOR APPROVAL TO DETERMINE AMOUNT OF LIME REQUIRED. LABORATORY TEST MAY BE WAIVED PROVIDED AT LEAST 36 LBS. OF LIME PER SQ. YD. IS USED. SEE NCTCOG ITEM 301.2 "LIME TREATMENT". FLEXIBLE BASE (CRUSHED STONE/CONCRETE) PER NCTCOG ITEM 301.5 MAY BE SUBSTITUTED FOR LIME TREATMENT WITH THE APPROVAL OF THE TOWN ENGINEER.
4. REBAR SHALL BE SUPPORTED BY BAR CHAIRS OR OTHER DEVICES APPROVED BY TOWN ENGINEER.
5. NO TRAFFIC ON FINISHED SUBGRADE SHALL BE PERMITTED AFTER REINFORCING STEEL IS INSTALLED ABOVE SUBGRADE. NO TRAFFIC SHALL BE PERMITTED BEFORE OR DURING THE PLACING OF CONCRETE.
6. CROSS SLOPE OF STRAIGHT GROWN STREETS SHALL BE 1/4" PER FOOT UNLESS APPROVED BY THE TOWN ENGINEER.
7. PAVEMENT THICKNESS AND STRENGTHS SHALL BE AS FOLLOWS:
   MAJOR ARTERIAL – 10" CLASS "P1" OR "P2."
   MINOR ARTERIAL – 8" CLASS "P1" OR "P2."
   COMMERCIAL/INDUSTRIAL COLLECTOR – 8" CLASS "P1" OR "P2."
   RESIDENTIAL COLLECTOR – 8" CLASS "P1" OR "P2."
   RESIDENTIAL LOCAL – 6" CLASS "P1" OR "P2."
   SIDEWALK AND DRIVEWAYS–4"–CLASS "A"
   DRIVE APPROACH–8"–CLASS "P2"
   ALLEY–8" CLASS "P1" OR "P2."
8. CONCRETE MIX DESIGN SHALL BE AS DEFINED BY NCTCOG 303.3.
9. ALL MEDIANS AND PARKWAYS SHALL BE PROVIDED WITH BERMUDA GROUND COVER.
10. ONCE A CURB ABUTTING A THOROUGHFARE HAS BEEN SAWCUT AND REMOVED, THE CONTRACTOR MUST REPLACE THE CONCRETE WITH A NEW POUR (i.e. DRIVEWAY) WITHIN 14 CALENDAR DAYS. LIQUIDATED DAMAGES WILL BE ASSESSED AT $500 PER DAY FOR EACH CALENDAR DAY IN EXCESS OF 14 CALENDAR DAYS. PAVEMENT SHALL BE MADE PRIOR TO ACCEPTANCE OR ISSUANCE OF A CERTIFICATE OF OCCUPANCY.
11. ALL SIDEWALKS AND ACCESSIBLE ROUTES SHALL HAVE A MAXIMUM LONGITUDINAL SLOPE OF 5% AND A MAXIMUM CROSS SLOPE OF 2%.
12. ALLEYS AND DRIVEWAYS
    A. CONCRETE FOR ALLEY RETURNS AND DRIVEWAYS SHALL HAVE A MINIMUM COMPRESSIVE STRENGTH AT 28 DAYS IDENTICAL TO THAT SPECIFIED FOR THE STREET PAVEMENT OR BASE WHEN BUILT AS COMPONENTS OF A CONCRETE PAVING PROJECT. WHEN BUILT SEPARATELY, THE STRENGTH SHALL BE AS SPECIFIED ON THE CONSTRUCTION PLAN.
    B. SPACING AND CONSTRUCTION OF JOINTS SHALL CONFORM TO PARABOLIC STREET PAVEMENT.

Addison! PUBLIC WORKS DEPARTMENT | PAVING GENERAL NOTES | STANDARD CONSTRUCTION DETAILS PAVING | DATE: AUGUST, 2010 | REV DATE: – | SHEET: SD-P00

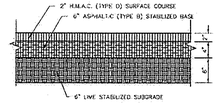

ASPHALT PAVING CROSS SECTION

NOTE:
CUT OF 6" INTO EXISTING PAVEMENT IS REQUIRED FOR CONSTRUCTION JOINT WITH NEW POURS TO GET A SMOOTH FINISH

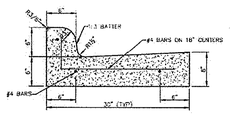

Addison! PUBLIC WORKS DEPARTMENT | CURB AND GUTTER & ASPHALT PAVING CROSS SECTION | STANDARD CONSTRUCTION DETAILS PAVING | DATE: AUGUST, 2010 | REV DATE: – | SHEET: SD-P01

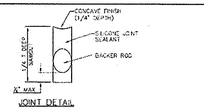

JOINT DETAIL
NTS

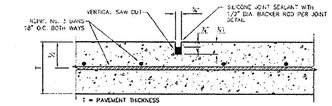

SAWED DUMMY JOINTS
NTS

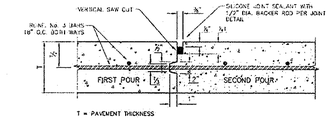

NOTE: CONTRACTOR SHALL PROTECT KEYWAY PRIOR TO SECOND POUR. IF LONGITUDINAL KEYWAY IS DAMAGED, CONTRACTOR SHALL REPAIR WITH THE USE OF LONGITUDINAL BUTT JOINT. DRILL AND GROUT DOWELS INTO FIRST POUR.

CONSTRUCTION JOINTS FOR PAVEMENT
NTS
TRANSVERSE AND LONGITUDINAL JOINTS

Addison! PUBLIC WORKS DEPARTMENT | JOINT DETAILS | STANDARD CONSTRUCTION DETAILS PAVING | DATE: AUGUST, 2010 | REV DATE: – | SHEET: SD-P18

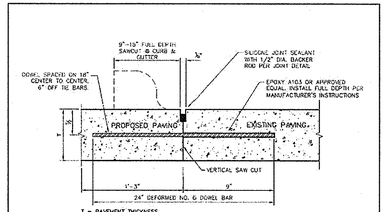

NOTES:
1. NO. 5 DEFORMED BAR MAY BE USED IN 6 INCH PAVEMENT.
2. LONGITUDINAL BUTT CONSTRUCTION MAY BE USED IN PLACE OF LONGITUDINAL HINGED (KEYWAY) JOINT AT CONTRACTORS OPTION.
3. DOWEL BARS SHALL BE DRILLED INTO PAVEMENT HORIZONTALLY BY USE OF A MECHANICAL RIG.
4. DRILLING BY HAND IS NOT ACCEPTABLE. PUSHING DOWEL BARS INTO GREEN CONCRETE IS NOT ACCEPTABLE.

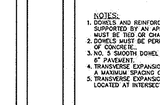

JOINT DETAIL
NTS

LONGITUDINAL BUTT JOINT
NTS

Addison! PUBLIC WORKS DEPARTMENT | LONGITUDINAL BUTT JOINT | STANDARD CONSTRUCTION DETAILS PAVING | DATE: AUGUST, 2010 | REV DATE: – | SHEET: SD-P19

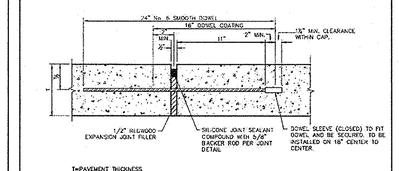

NOTES:
1. DOWELS AND REINFORCING BARS SHALL BE SUPPORTED BY AN APPROVED DEVICE AND MUST BE TIED OR CHAIRED ON EACH SIDE.
2. DOWELS SHALL BE PERPENDICULAR TO FACE OF CONCRETE.
3. NO. 5 SMOOTH DOWEL BARS MAY BE USED IN 6" PAVEMENT.
4. TRANSVERSE EXPANSION JOINTS SHALL HAVE A MAXIMUM SPACING OF 600 FT.
5. TRANSVERSE EXPANSION JOINTS SHALL BE LOCATED AT INTERSECTIONS.

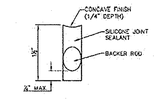

JOINT DETAIL
NTS

TRANSVERSE EXPANSION JOINT
N.T.S.

Addison! PUBLIC WORKS DEPARTMENT | TRANSVERSE EXPANSION JOINT | STANDARD CONSTRUCTION DETAILS PAVING | DATE: AUGUST, 2010 | REV DATE: – | SHEET: SD-P20

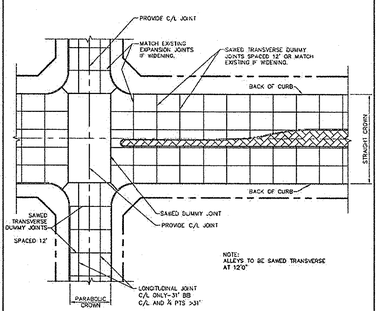

NOTE:
ALLEYS TO BE SAWED TRANSVERSE AT 120'0"

SPACING DIAGRAM FOR TRANSVERSE JOINTS
NTS

Addison! PUBLIC WORKS DEPARTMENT | SPACING DIAGRAM FOR TRANSVERSE JOINTS | STANDARD CONSTRUCTION DETAILS PAVING | DATE: AUGUST, 2010 | REV DATE: – | SHEET: SD-P02

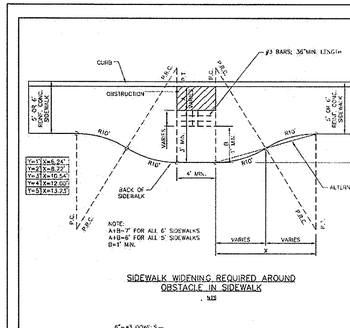

NOTE:
A=B=3' FOR ALL 5' SIDEWALKS
A=B=6' FOR ALL 5' SIDEWALKS
B=8' MIN.

SIDEWALK WIDENING REQUIRED AROUND OBSTACLE IN SIDEWALK
NTS

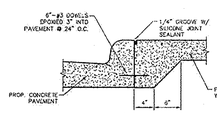

JOINT DETAIL FOR SIDEWALKS ADJACENT TO CURB
NTS

Addison! PUBLIC WORKS DEPARTMENT | SIDEWALK WIDENING REQUIRED AROUND OBSTACLE IN SIDEWALK & JOINT DETAIL FOR SIDEWALKS ADJACENT TO CURB | STANDARD CONSTRUCTION DETAILS PAVING | DATE: AUGUST, 2010 | REV DATE: – | SHEET: SD-P05

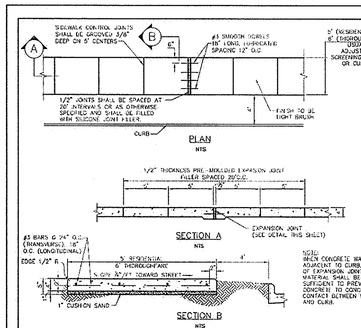

Addison! PUBLIC WORKS DEPARTMENT | CONCRETE SIDEWALK | STANDARD CONSTRUCTION DETAILS PAVING | DATE: AUGUST, 2010 | REV DATE: – | SHEET: SD-P08

GENERAL NOTES FOR PEDESTRIAN FACILITIES

1. ALL SLOPES ARE MAXIMUM ALLOWABLE. THE LEAST POSSIBLE SLOPE THAT WILL STILL PROVIDE DRAINAGE SHOULD BE USED. ADJUST CURB RAMP LENGTH OR GRADE OF APPROACH SIDEWALKS AS DIRECTED.
2. LANDINGS SHALL BE 5'X5' MINIMUM WITH A MAXIMUM 2% SLOPE IN ANY DIRECTION.
3. MANEUVERING SPACE AT THE BOTTOM OF CURB RAMPS SHALL BE A MINIMUM OF 4'X4' WHOLLY CONTAINED WITHIN THE CROSSWALK AND WHOLLY OUTSIDE THE PARALLEL VEHICULAR TRAVEL PATH.
4. MAXIMUM ALLOWABLE CROSS SLOPE ON SIDEWALK AND CURB RAMP SURFACES IS 2%.
5. RAMPS SHALL BE PROVIDED WHERE CURBS MUST BE USED TO ENABLE PEDESTRIANS WOULD NOT NORMALLY WALK ACROSS THE RAMP, EITHER BECAUSE THE ADJACENT SURFACE IS PLANTING OR OTHER NON-WALKING SURFACE OR BECAUSE THE SIDE APPROACH IS SUBSTANTIALLY OBSTRUCTED. OTHERWISE, PROVIDE FLARED SIDES.
6. ADDITIONAL INFORMATION ON CURB RAMP LOCATION, DESIGN, LIGHT REFLECTIVE VALUE (LRV), DETECTABLE WARNING SURFACE IS IN THE CURRENT EDITION OF THE TEXAS ACCESSIBILITY STANDARDS (TAS) AND IN THE SUBMITTAL.
7. CURB RAMPS SHALL BE ALIGNED WITH THE CROSSWALKS, OR AS DIRECTED BY THE TOWN ENGINEER.
8. HANDRAILS ARE NOT REQUIRED ON CURB RAMPS. PROVIDE CURB RAMPS WHEREVER ON ACCESSIBLE ROUTE CROSSES (PENETRATES) A CURB.
9. FLARE SLOPE SHALL NOT EXCEED 10% MEASURED ALONG CURB LINE.
10. PROVIDE DETECTABLE WARNING SURFACE ON RAMPS IN ACCORDANCE WITH THE CURRENT EDITION OF THE TEXAS ACCESSIBILITY STANDARDS (TAS).
11. ALL BARRIER FREE RAMPS MUST PASS AN INDEPENDENT INSPECTION. A LETTER OF COMPLIANCE ACCEPTANCE IS REQUIRED PRIOR TO FINAL ACCEPTANCE BY THE TOWN OF ADDISON.
12. RAMPS ON STEEP GRADE WILL REQUIRE LONGER TRANSITION OR UPGRADE SOC.
13. MAXIMUM SLOPE OR RAMP PORTION SHALL NOT EXCEED 1" PER FOOT AT ANY LOCATION. VERTICAL DISTANCE BETWEEN STREET AND RAMP SHALL NOT EXCEED 9".

GENERAL NOTES FOR DETECTABLE WARNINGS

1. CURB RAMPS MUST CONTAIN A DETECTABLE WARNING SURFACE THAT CONSIST OF RAISED TRUNCATED DOMES COMPLYING WITH SECTION 4.29 OF THE TEXAS ACCESSIBILITY STANDARDS (TAS). THE SURFACE MUST CONTRAST VISUALLY WITH THE ADJOINING SURFACES, INCLUDING WHEN VIEWED IN FOG OR DARKNESS. ACCEPTABLE DETECTABLE WARNING SURFACE INCLUDES UNGLAZED CONCRETE AND CREAM COLORED DETECTABLE WARNING SURFACE ADJACENT TO DARK RED COLORED BRICK PAVERS.
2. DETECTABLE WARNING SURFACES MUST BE SLIP RESISTANT AND NOT ALLOW WATER TO ACCUMULATE.
3. ALIGN TRUNCATED DOMES IN THE DIRECTION OF PEDESTRIAN TRAVEL WHEN ENTERING THE STREET.
4. DETECTABLE WARNING SURFACES SHALL BE A MINIMUM OF 24" IN DEPTH IN THE DIRECTION OF PEDESTRIAN TRAVEL, AND EXTEND THE FULL WIDTH OF THE CURB RAMP OR LANDING WHERE THE PEDESTRIAN ACCESS ROUTE ENTERS THE STREET.
5. DETECTABLE WARNING SURFACES SHALL BE LOCATED SO THAT THE EDGE NEAREST THE CURB LINE IS A MINIMUM OF 6" AND A MAXIMUM OF 8" FROM THE EXTENSION OF THE FACE OF CURB AND SHALL BE AN INTEGRAL PART OF THE WALKING SURFACE. DETECTABLE WARNING SURFACES MAY BE CURVED ALONG THE CORNER RADIUS.

GENERAL NOTES FOR DETECTABLE WARNING PAVER UNITS

1. DETECTABLE WARNING PAVER UNITS SHALL MEET OR EXCEED ALL REQUIREMENTS OF ASTM C936, C902–33, AND BE LAID IN A TWO BY TWO UNIT BASKET WEAVE PATTERN OR AS DIRECTED.
2. LAY FULL–SIZE UNITS FIRST FOLLOWED BY CLOSURE UNITS CONSISTING OF AT LEAST 25 PERCENT OF A FULL UNIT. CUT DETECTABLE WARDING PAVER UNITS USING A POWER SAW.

Addison! PUBLIC WORKS DEPARTMENT | PEDESTRIAN FACILITIES GENERAL NOTES | STANDARD CONSTRUCTION DETAILS PAVING | DATE: AUGUST, 2010 | REV DATE: – | SHEET: SD-P07

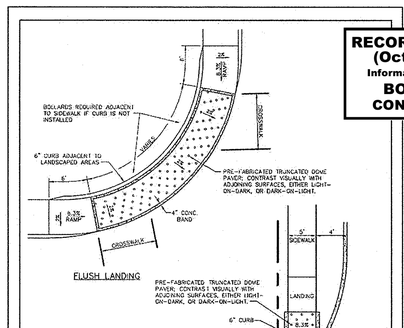

Addison! PUBLIC WORKS DEPARTMENT | PEDESTRIAN RAMPS | STANDARD CONSTRUCTION DETAILS PAVING | DATE: AUGUST, 2010 | REV DATE: – | SHEET: SD-P09

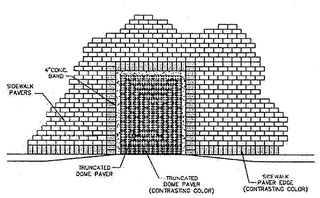

NOTE:
ALL PAVER COLORS TO BE APPROVED BY TOWN OF ADDISON.

Addison! PUBLIC WORKS DEPARTMENT | TYPICAL PATTERN FOR PAVER SIDEWALK AND CURB RAMP | STANDARD CONSTRUCTION DETAILS PAVING | DATE: AUGUST, 2010 | REV DATE: – | SHEET: SD-P10

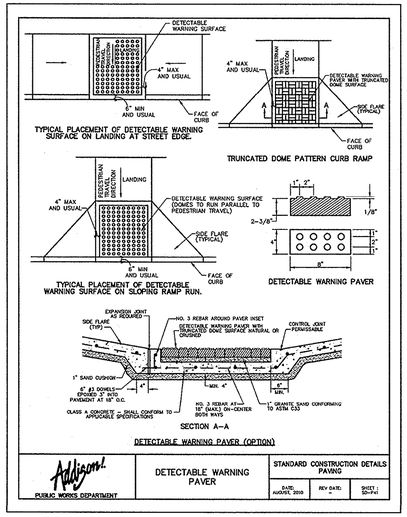

Addison! PUBLIC WORKS DEPARTMENT | DETECTABLE WARNING PAVER | STANDARD CONSTRUCTION DETAILS PAVING | DATE: AUGUST, 2010 | REV DATE: – | SHEET: SD-P11

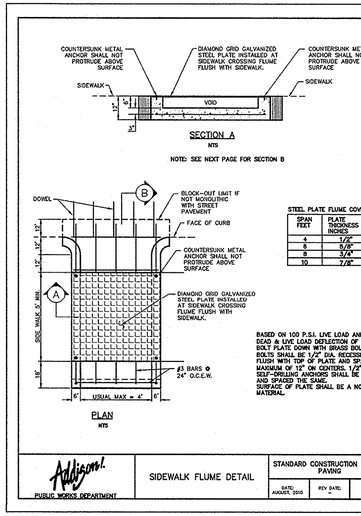

STEEL PLATE FLUME COVER

SPAN FEET	PLATE THICKNESS INCHES
4	1/2"
6	5/8"
8	3/4"
10	7/8"

BASED ON 100 P.S.I. LIVE LOAD AND MAX. DEAD & LIVE LOAD DEFLECTION OF L/240 SKIT PLATE DOWN WITH BRASS BOLTS. BOLTS SHALL BE 1/2" DIA. RECESSED TO FLUSH WITH TOP OF PLATE AND SPACED A MAXIMUM OF 12" ON CENTERS. 1/2" DIA. SELF-DRILLING ANCHORS SHALL BE USED AND SPACED THE SAME. SURFACE OF PLATE SHALL BE A NON-SKID MATERIAL.

Addison! PUBLIC WORKS DEPARTMENT | SIDEWALK FLUME DETAIL | STANDARD CONSTRUCTION DETAILS PAVING | DATE: AUGUST, 2010 | REV DATE: – | SHEET: SD-P20

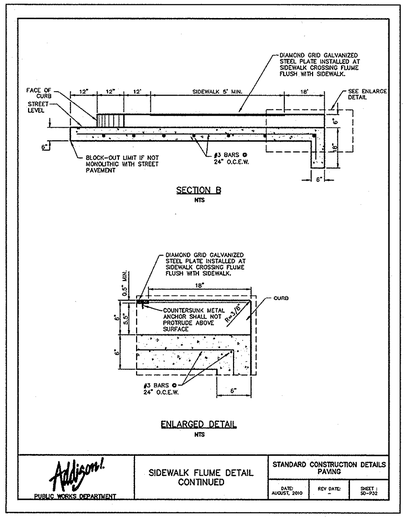

Addison! PUBLIC WORKS DEPARTMENT | SIDEWALK FLUME DETAIL CONTINUED | STANDARD CONSTRUCTION DETAILS PAVING | DATE: AUGUST, 2010 | REV DATE: – | SHEET: SD-P02

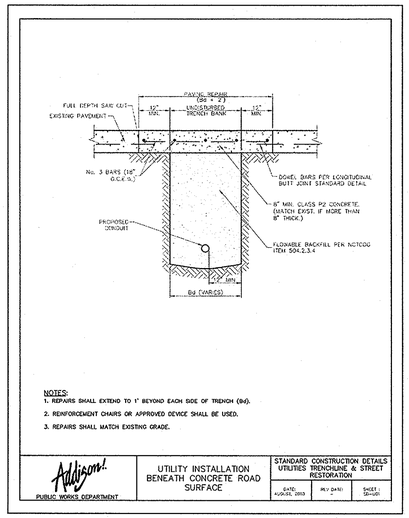

NOTES:
1. REPAIRS SHALL EXTEND TO 1' BEYOND EACH SIDE OF TRENCH (BB).
2. REINFORCEMENT CHAIRS OR APPROVED DEVICE SHALL BE USED.
3. REPAIRS SHALL MATCH EXISTING GRADE.

Addison! PUBLIC WORKS DEPARTMENT | UTILITY INSTALLATION BENEATH CONCRETE ROAD SURFACE | STANDARD CONSTRUCTION DETAILS UTILITIES TRENCHLINE & STREET RESTORATION | DATE: AUGUST, 2010 | REV DATE: – | SHEET: SD-U01

RECORD DRAWINGS (October 2013)
Information Provided By:
BOB MOORE CONSTRUCTION

No.	REVISIONS	DATE	BY

Kimley-Horn and Associates, Inc.
State of Texas Registration No. F-928
5750 GENESIS COURT, SUITE 200, FRISCO, TX 75034
PHONE: 972-335-3580 FAX: 972-335-3779
WWW.KIMLEY-HORN.COM

STATE OF TEXAS
ROY BRASWELL
104908
LICENSED PROFESSIONAL ENGINEER
5/14/13

KHA PROJECT	063319038
DATE	06/14/2013
SCALE	AS SHOWN
DESIGNED BY	TBB
DRAWN BY	AAE
CHECKED BY	TBB

VILLAGE ON THE PARKWAY PHASE II
ADDISON, TEXAS

TOWN OF ADDISON PAVING DETAILS

SHEET NUMBER
C-16

This document, together with the concepts and designs presented herein, as an instrument of service, is intended only for the specific purpose and client for which it was prepared. Reuse of and improper reliance on this document without written authorization and adaptation by Kimley-Horn and Associates, Inc. shall be without liability to Kimley-Horn and Associates, Inc.

PLOTTED BY LUCIO, RAMIRO 6/14/2013 1:25 PM
DWG NAME K:\FW_CIVIL\063319038\VOP\DWG\PLAN SET\PHASE II\C-17-TOA-PAVE-DETS.DWG [C-18 TOWN OF ADDISON PAVING DETAILS]
LAST SAVED 6/12/2013 1:39 PM

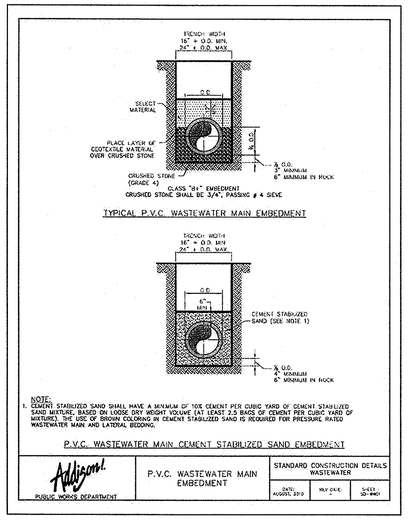

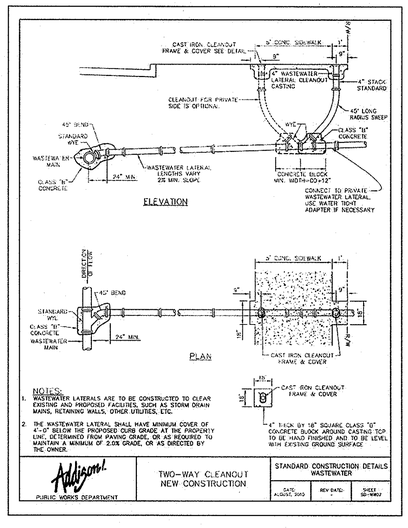

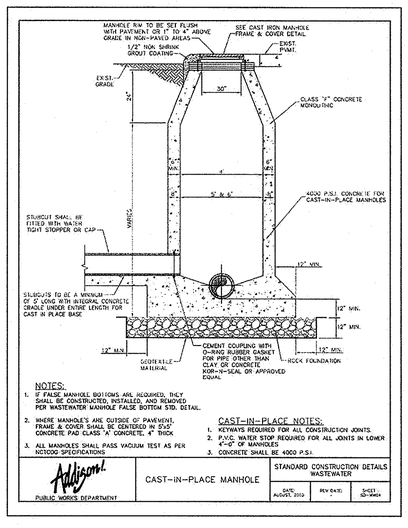

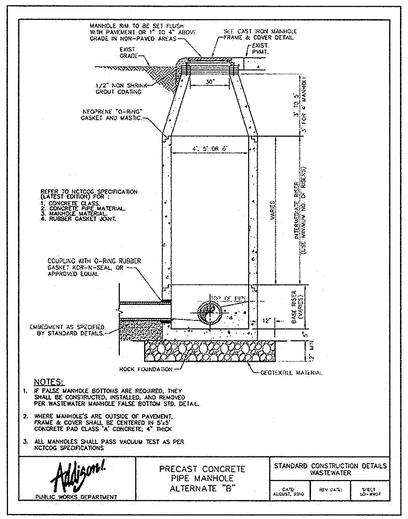

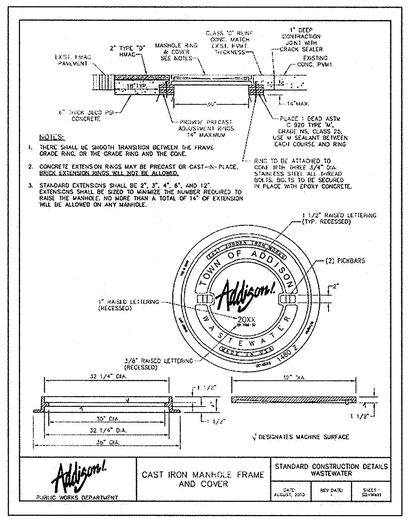

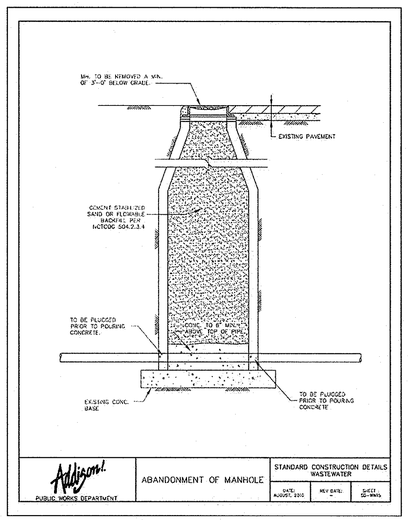

RECORD DRAWINGS (October 2013)
Information Provided By:
BOB MOORE CONSTRUCTION

No.	REVISIONS	DATE	BY

Kimley-Horn and Associates, Inc.
State of Texas Registration No. F-928
5750 GENESIS COURT, SUITE 200, FRISCO, TX 75034
PHONE: 972-335-3580 FAX: 972-335-3779
WWW.KIMLEY-HORN.COM

STATE OF TEXAS
ROY BRASWELL
104908
LICENSED PROFESSIONAL ENGINEER
6/14/13

KHA PROJECT 063319038
DATE 06/14/2013
SCALE AS SHOWN
DESIGNED BY TBB
DRAWN BY AAE
CHECKED BY TBB

VILLAGE ON THE PARKWAY PHASE II
ADDISON, TEXAS

TOWN OF ADDISON SANITARY SEWER DETAILS

SHEET NUMBER
C-17

PLOTTED BY LUCIO, RAMIRO 6/14/2013 1:25 PM
DWG NAME K:\FRI_CIVIL\63319038-VOP2\DWG\PLAN-SET PHASE II\TC-18-TOA-WASTEWATER-DETAILS.DWG [C-17 TOWN OF ADDISON SANITARY SEWER DETAILS]
LAST SAVED 6/14/2013 1:18 PM
This document, together with the concepts and designs presented herein, as an instrument of service, is intended only for the specific purpose and client for which it was prepared. Reuse of and improper reliance on this document without written authorization and adaptation by Kimley-Horn and Associates, Inc. shall be without liability to Kimley-Horn and Associates, Inc.

This document, together with the concepts and designs presented herein, as an instrument of service, is intended only for the specific purpose and client for which it was prepared. Reuse of and improper reliance on this document without written authorization and adaptation by Kimley-Horn and Associates, Inc. shall be without liability to Kimley-Horn and Associates, Inc.

PLOTTED BY LUCIO, RAMIRO 6/14/2013 1:25 PM
DWG NAME K:\FRI_CIVIL\063319038-VOP\DWG\PLAN SET PHASE II\C-19-TOA-WATER-DETS.DWG [C-18 TOWN OF ADDISON WATER DETAILS]
LAST SAVED 6/14/2013 1:20 PM

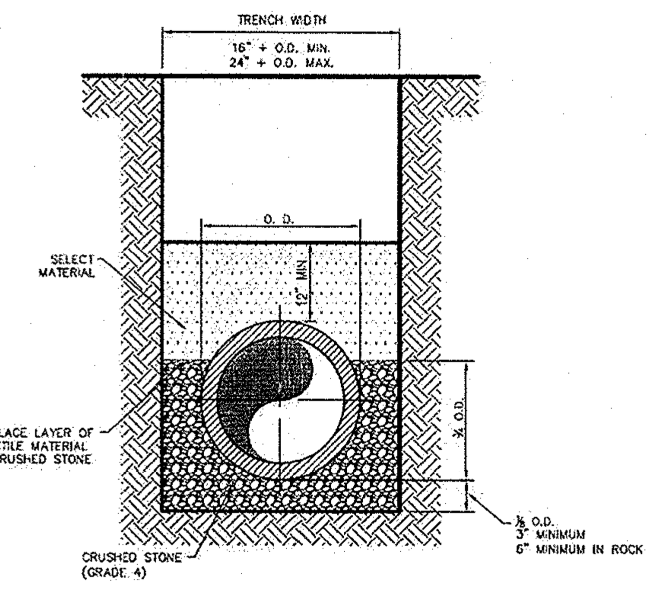

CLASS "B+" EMBEDMENT

CRUSHED STONE SHALL BE 3/4", PASSING # 4 SIEVE

TYPICAL P.V.C. WATER MAIN
EMBEDMENT

Addison! PUBLIC WORKS DEPARTMENT | P.V.C. WATER MAIN EMBEDMENT | STANDARD CONSTRUCTION DETAILS WATER | DATE: AUGUST, 2010 | REV DATE: - | SHEET : SD-W01

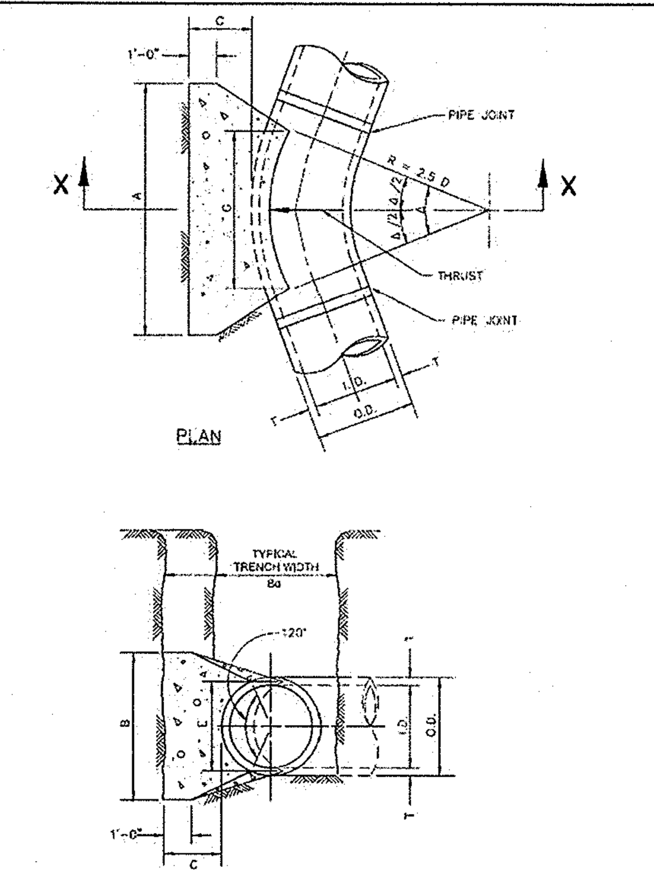

Addison! PUBLIC WORKS DEPARTMENT | HORIZONTAL THRUST BLOCK AT PIPE BEND | STANDARD CONSTRUCTION DETAILS WATER | DATE: AUGUST, 2010 | REV DATE: - | SHEET : SD-W04

I.D. (IN.)	T (IN.)	Δ = 11.25° (FT.)	Δ ≥ 22.50° (FT.)	E (FT.)
4,6,8	0.4	1.5	1.5	0.9
10,12	0.5	1.5	1.5	1.2
16,18	0.6	1.5	1.5	1.6
20	0.7	1.5	1.5	1.8
24	0.9	1.5	1.5	2.1
30	2.9	1.5	1.9	2.6
36	4.5	1.5	2.3	3.3
42	5.0	1.8	2.6	3.8
48	5.5	2.0	3.0	4.3
54	6.0	2.3	3.4	4.8
60	6.5	2.5	3.8	5.3
66	6.8	2.8	4.1	5.7
72	7.5	3.0	4.5	6.3
78	7.5	3.3	4.9	6.7
84	8.0	3.5	5.3	7.2
90	8.5	3.8	5.6	7.7
96	9.0	4.0	6.0	8.2

	Δ = 11.25°									Δ = 22.50°							
			EARTH			ROCK						EARTH			ROCK		
I.D. (IN.)	G (FT.)	THRUST (TONS)	A (FT.)	B (FT.)	VOL. (C.Y.)	A (FT.)	B (FT.)	VOL. (C.Y.)	I.D. (IN.)	G (FT.)	THRUST (TONS)	A (FT.)	B (FT.)	VOL. (C.Y.)	A (FT.)	B (FT.)	VOL. (C.Y.)
4,6,8	0.4	1.0	1.0	1.5	0.1	1.0	1.0	0.1	4,6,8	0.8	2.0	1.5	1.5	0.1	1.0	1.0	0.1
10,12	0.6	2.2	1.5	1.5	0.1	1.0	1.5	0.1	10,12	1.1	4.4	2.0	2.5	0.3	1.5	1.5	0.1
16,18	0.8	5.0	2.0	2.5	0.3	1.5	2.0	0.2	16,18	1.6	9.9	3.0	3.5	0.6	2.0	2.5	0.3
20	0.9	6.2	2.0	3.5	0.4	1.5	3.0	0.3	20	1.8	12.3	3.5	3.5	0.7	2.0	3.0	0.4
24	1.1	8.9	3.0	3.5	0.5	1.5	3.0	0.3	24	2.2	17.7	4.0	4.5	1.0	3.0	3.5	0.5
30	1.4	10.4	3.0	3.5	0.6	2.0	3.5	0.4	30	2.7	20.7	5.0	4.5	1.5	3.0	4.0	0.8
36	1.7	15.0	3.5	4.5	0.9	2.0	4.0	0.5	36	3.3	29.8	5.5	5.5	2.3	4.0	4.0	1.3
42	1.9	20.4	4.5	5.0	1.5	2.5	5.0	0.8	42	3.8	40.5	7.0	6.0	3.9	4.5	5.0	2.1
48	2.2	26.6	4.5	6.0	2.0	2.5	6.0	1.1	48	4.4	52.9	8.0	7.0	5.7	4.5	6.0	2.8
54	2.5	33.7	6.0	6.0	3.0	3.0	6.0	1.4	54	4.9	67.0	9.0	8.0	8.0	6.0	6.0	4.1
60	2.7	41.6	6.0	7.0	3.8	3.0	7.0	1.8	60	5.5	82.7	9.5	9.0	10.6	6.0	7.0	5.3
66	3.0	50.3	6.5	8.0	5.1	3.5	8.0	2.7	66	6.0	100.1	10.5	10.0	14.1	6.5	8.0	7.2
72	3.3	59.9	7.5	8.0	6.3	4.0	8.0	3.3	72	6.6	119.1	11.0	11.0	17.6	7.5	8.0	9.1
78	3.6	70.2	8.0	9.0	8.1	4.0	9.0	3.9	78	7.1	139.8	12.0	12.0	22.5	8.0	9.0	11.7
84	3.8	81.5	8.5	10.0	10.3	4.5	10.0	5.3	84	7.6	162.1	13.0	12.5	27.2	8.5	10.0	14.6
90	4.1	93.5	9.5	10.0	12.2	5.0	10.0	6.3	90	8.2	186.1	14.0	13.5	33.7	9.5	10.0	17.7
96	4.4	106.4	10.0	11.0	15.0	5.0	11.0	7.4	96	8.7	211.7	15.0	14.5	41.2	10.0	11.0	21.8

TABLES OF DIMENSIONS AND QUANTITIES

Addison! PUBLIC WORKS DEPARTMENT | HORIZONTAL THRUST BLOCK DIMENSIONS & QUANTITIES | STANDARD CONSTRUCTION DETAILS WATER | DATE: AUGUST, 2010 | REV DATE: - | SHEET : SD-W05

	Δ = 30°									Δ = 45°							
			EARTH			ROCK						EARTH			ROCK		
I.D. (IN.)	G (FT.)	THRUST (TONS)	A (FT.)	B (FT.)	VOL. (C.Y.)	A (FT.)	B (FT.)	VOL. (C.Y.)	I.D. (IN.)	G (FT.)	THRUST (TONS)	A (FT.)	B (FT.)	VOL. (C.Y.)	A (FT.)	B (FT.)	VOL. (C.Y.)
4,6,8	1.0	2.6	2.0	1.5	0.2	1.0	1.5	0.1	4,6,8	1.5	3.9	2.0	2.0	0.2	1.5	1.5	0.1
10,12	1.5	5.9	2.5	2.5	0.3	2.0	1.5	0.2	10,12	2.2	8.7	3.5	2.5	0.5	2.0	2.5	0.3
16,18	2.2	13.2	3.5	4.0	0.8	2.5	3.0	0.4	16,18	3.2	19.5	4.5	4.5	1.2	3.0	3.5	0.6
20	2.4	16.3	4.5	4.0	1.0	3.0	3.0	0.5	20	3.6	24.1	5.5	4.5	1.5	3.5	3.5	0.7
24	2.9	23.4	6.0	4.0	1.4	3.5	3.5	0.7	24	4.3	34.6	8.0	4.5	2.3	4.5	4.0	1.1
30	3.6	27.5	6.5	5.0	1.9	3.5	4.0	0.9	30	5.4	40.6	8.5	5.0	3.2	5.5	4.0	1.6
36	4.4	39.5	7.0	6.0	3.4	4.5	4.5	1.6	36	6.5	58.5	10.0	6.0	5.3	6.5	4.5	2.6
42	5.1	53.8	8.0	7.0	5.1	5.5	5.0	2.5	42	7.5	79.6	11.5	7.0	8.1	8.0	5.0	4.2
48	5.8	70.3	9.0	8.0	7.4	6.0	6.0	3.7	48	8.6	104.0	13.0	8.0	11.9	9.0	6.0	6.3
54	6.5	89.0	10.0	9.0	10.3	7.0	6.5	5.3	54	9.7	131.5	15.0	9.0	17.1	10.5	6.5	8.9
60	7.3	110.0	11.0	10.0	13.9	7.5	7.5	7.3	60	10.7	162.4	16.5	10.0	23.1	11.0	7.5	12.0
66	8.0	132.9	12.5	11.0	18.9	8.5	8.0	9.6	66	11.8	196.5	18.0	11.0	30.1	12.0	8.5	16.2
72	8.7	158.2	13.5	12.0	24.0	9.0	9.0	12.3	72	12.9	233.9	19.5	12.0	38.6	14.0	8.5	20.7
78	9.4	185.6	14.5	13.0	30.0	10.0	9.5	15.6	78	13.9	274.5	21.5	13.0	49.8	14.5	9.5	25.9
84	10.1	215.3	15.5	14.0	37.1	10.5	10.5	19.5	84	15.0	318.4	23.0	14.0	61.2	15.5	10.5	32.6
90	10.9	247.1	16.5	15.0	45.0	11.5	11.0	23.9	90	16.1	365.5	24.6	15.0	74.5	17.5	10.5	39.6
96	11.6	281.2	18.0	16.0	55.5	12.5	11.5	28.9	96	17.1	415.6	26.0	16.0	89.5	18.5	11.5	48.5

	Δ = 67.50°									Δ = 90°							
			EARTH			ROCK						EARTH			ROCK		
I.D. (IN.)	G (FT.)	THRUST (TONS)	A (FT.)	B (FT.)	VOL. (C.Y.)	A (FT.)	B (FT.)	VOL. (C.Y.)	I.D. (IN.)	G (FT.)	THRUST (TONS)	A (FT.)	B (FT.)	VOL. (C.Y.)	A (FT.)	B (FT.)	VOL. (C.Y.)
4,6,8	2.1	5.6	3.0	2.0	0.3	2.0	1.5	0.2	4,6,8	2.7	7.1	5.0	1.5	0.4	2.0	2.0	0.2
10,12	3.1	12.6	5.5	2.5	0.8	3.5	2.0	0.4	10,12	4.0	16.0	6.5	2.5	1.0	3.5	2.5	0.5
16,18	4.7	28.3	7.5	4.0	1.9	5.5	3.0	0.9	16,18	6.0	36.0	9.0	4.0	2.4	4.5	4.0	1.0
20	5.2	34.9	9.0	4.0	2.3	5.5	3.5	1.2	20	6.6	44.4	10.0	4.5	3.1	6.0	4.0	1.5
24	6.2	50.3	11.5	4.5	3.5	6.5	4.0	1.6	24	7.9	64.0	14.5	4.5	5.0	8.0	4.0	2.1
30	7.8	58.9	12.0	5.0	4.8	7.5	4.0	2.2	30	9.9	75.0	15.0	5.0	6.7	10.0	4.0	3.3
36	9.4	84.9	14.5	6.0	8.2	9.5	4.5	3.8	36	11.9	108.0	18.0	6.0	11.4	12.0	4.5	5.3
42	10.9	115.5	17.0	7.0	12.8	11.0	5.5	6.3	42	13.9	147.0	21.0	7.0	17.8	14.0	5.5	8.7
48	12.5	150.9	19.0	8.0	18.4	13.0	6.0	9.2	48	15.9	192.0	24.0	8.0	26.2	16.0	6.0	12.4
54	14.0	191.0	21.5	9.0	26.0	15.0	6.5	12.9	54	17.9	243.0	27.0	9.0	36.9	18.0	7.0	18.1
60	15.6	235.8	24.0	10.0	35.6	16.0	7.5	17.6	60	19.9	299.8	30.0	10.0	50.3	20.0	7.5	24.0
66	17.1	285.3	26.0	11.0	46.0	18.0	8.0	23.0	66	21.8	362.8	33.0	11.0	66.2	22.0	8.5	32.5
72	18.7	339.5	28.5	12.0	57.8	19.0	9.0	28.4	72	23.8	431.8	36.0	12.0	85.6	24.0	9.0	41.0
78	20.2	398.5	31.0	13.0	75.7	21.0	9.5	37.4	78	25.7	506.7	39.0	13.0	108.2	26.0	10.0	53.2
84	21.8	462.1	33.5	14.0	94.7	22.0	10.5	46.5	84	27.7	587.7	42.0	14.0	134.4	28.0	10.5	64.8
90	23.3	530.5	35.5	15.0	114.4	24.5	11.0	58.2	90	29.0	674.6	45.0	15.0	164.9	30.0	11.5	81.2
96	24.9	603.6	38.0	16.0	138.9	25.5	12.0	70.0	96	31.6	767.5	48.0	16.0	199.0	32.0	12.0	95.1

TABLES OF DIMENSIONS AND QUANTITIES

Addison! PUBLIC WORKS DEPARTMENT | HORIZONTAL THRUST BLOCK DIMENSIONS & QUANTITIES | STANDARD CONSTRUCTION DETAILS WATER | DATE: AUGUST, 2010 | REV DATE: - | SHEET : SD-W06

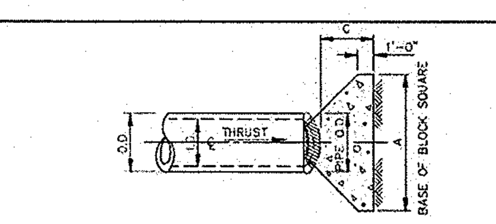

PLAN OF PLUG THRUST BLOCK

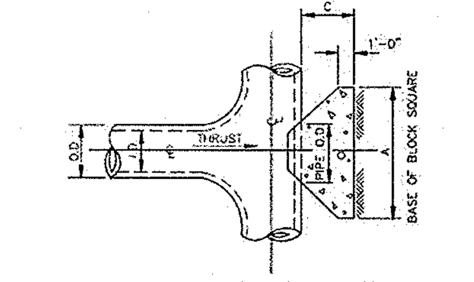

PLAN OF TEE THRUST BLOCK

			EARTH		ROCK	
I.D. (IN.)	THRUST (TONS)	C (FT.)	A (FT.)	VOL. (C.Y.)	A (FT.)	VOL. (C.Y.)
4,6,8	5.1	1.5	2.5	0.3	2.0	0.2
10,12	11.3	1.5	3.5	0.6	2.5	0.3
16,18	25.5	2.0	5.5	1.6	4.0	0.9
20	31.5	2.0	6.0	1.9	4.0	0.9
24	45.2	2.5	7.0	3.1	5.0	1.7
30	53.0	3.0	7.5	4.1	5.5	2.4
36	76.3	4.0	9.0	7.3	6.5	4.2
42	104.0	4.5	10.5	11.0	7.5	6.2
48	136.0	5.0	12.0	15.6	8.5	8.7

			EARTH		ROCK	
I.D. (IN.)	THRUST (TONS)	C (FT.)	A (FT.)	VOL. (C.Y.)	A (FT.)	VOL. (C.Y.)
54	172.0	5.5	13.5	21.4	9.5	11.9
60	212.0	6.0	15.0	28.4	10.5	15.7
66	257.0	6.5	16.5	36.8	11.5	20.5
72	305.0	7.5	17.5	47.2	12.5	27.2
78	358.0	8.0	19.0	58.9	13.5	33.7
84	416.0	8.5	20.5	72.3	14.5	41.2
90	477.0	9.0	22.0	87.7	15.5	49.7
96	543.0	9.5	23.5	104.8	16.5	61.0

TABLES OF DIMENSIONS AND QUANTITIES

Addison! PUBLIC WORKS DEPARTMENT | HORIZONTAL THRUST BLOCK AT TEES & PLUGS | STANDARD CONSTRUCTION DETAILS WATER | DATE: AUGUST, 2010 | REV DATE: - | SHEET : SD-W07

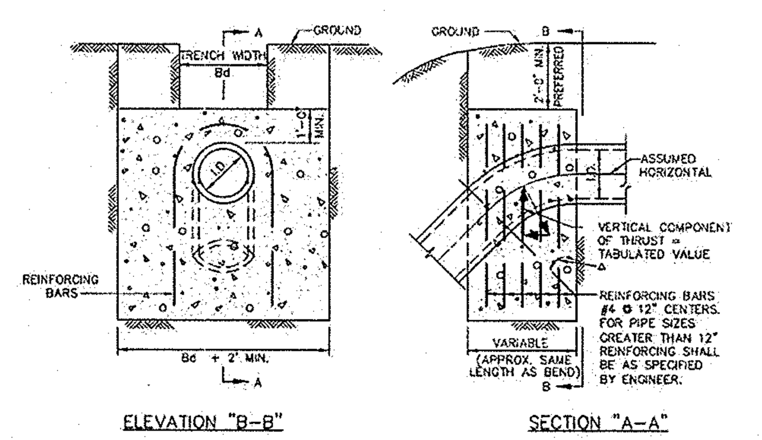

Δ	11.25°		22.50°		30°		45°		67.50°		90°		Δ
I.D. (IN.)	THRUST (TONS)	VOL. (C.Y.)	THRUST (TONS)	VOL. (C.Y.)	THRUST (TONS)	VOL. (C.Y.)	THRUST (TONS)	VOL. (C.Y.)	THRUST (TONS)	VOL. (C.Y.)	THRUST (TONS)	VOL. (C.Y.)	I.D. (IN.)
4,6,8	1.0	0.5	2.0	1.0	2.5	1.3	3.6	1.8	4.6	2.3	5.0	2.5	4,6,8
10,12	2.2	1.1	4.3	2.2	5.7	2.8	8.0	4.0	10.5	5.2	11.3	5.7	10,12
16,18	5.0	2.5	9.7	4.9	12.7	6.4	18.0	9.0	23.5	11.8	25.5	12.7	16,18
20	6.1	3.1	12.0	6.0	15.7	7.9	22.2	11.1	29.2	14.5	31.4	15.7	20
24	8.2	4.4	17.3	8.7	22.6	11.3	32.0	16.0	41.8	20.9	45.2	22.6	24
30	10.5	5.2	20.3	10.1	26.5	13.3	37.5	18.8	49.0	24.5	53.1	26.5	30
36	14.9	7.5	29.2	14.6	38.2	19.1	54.0	27.0	70.5	35.3	76.4	38.2	36
42	20.3	10.1	39.8	19.9	52.0	26.0	73.5	36.7	96.0	48.0	104.0	52.0	42
48	26.5	13.2	51.9	26.0	67.9	33.9	96.0	48.0	126.0	62.7	136.0	67.9	48
54	33.5	16.8	65.7	32.9	85.9	42.9	122.0	60.7	159.0	79.4	172.0	85.9	54
60	41.4	20.7	81.2	40.6	106.0	53.0	150.0	75.0	196.0	98.0	212.0	106.0	60
66	50.1	25.0	98.2	49.1	128.0	64.2	182.0	90.7	237.0	119.0	257.0	128.0	66
72	59.6	29.8	117.0	58.4	153.0	76.3	216.0	108.0	282.0	141.0	305.0	153.0	72
78	69.9	35.0	137.0	68.6	179.0	90.0	254.0	127.0	331.0	166.0	358.0	179.0	78
84	81.1	40.5	159.0	79.5	208.0	104.0	294.0	147.0	384.0	192.0	416.0	208.0	84
90	93.1	46.5	183.0	91.3	239.0	119.0	337.0	169.0	441.0	221.0	477.0	239.0	90
96	106.0	53.0	208.0	104.0	272.0	136.0	384.0	192.0	502.0	251.0	543.0	272.0	96

VERTICAL THRUST BLOCK

Addison! PUBLIC WORKS DEPARTMENT | VERTICAL THRUST BLOCK AT PIPE BEND | STANDARD CONSTRUCTION DETAILS WATER | DATE: AUGUST, 2010 | REV DATE: - | SHEET : SD-W08

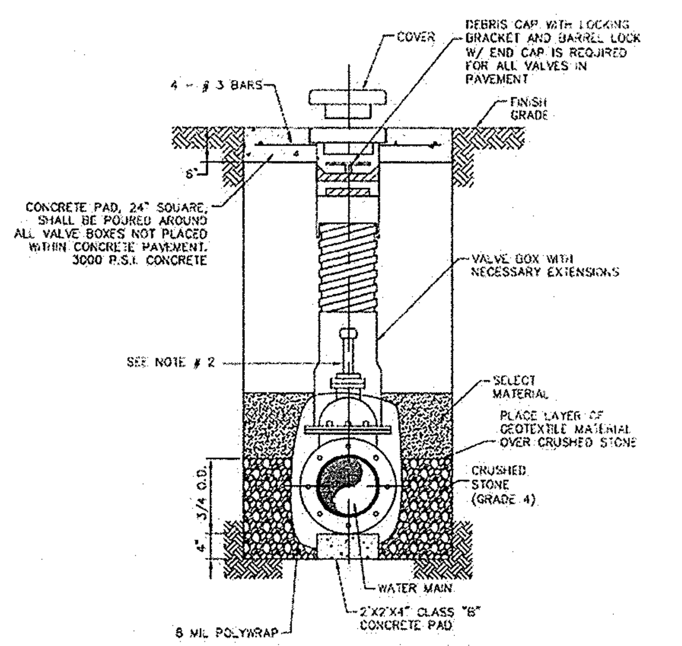

TYPICAL VALVE SETTING & BOX

NOTE:
1. 4"-12" R.S. GATE VALVES SHALL BE IN ACCORDANCE WITH TOWN OF ADDISON WATER SYSTEM REQUIREMENTS.
2. A PERMANENTLY ATTACHED VALVE EXTENSION STEM SHALL BE REQUIRED FOR ANY VALVE WHERE THE OPERATING NUT IS LOCATED IN EXCESS OF 5 FEET BELOW THE TOP OF VALVE BOX. THIS EXTENSION SHALL BE OF SUFFICIENT LENGTH TO INSURE THAT ITS TOP IS WITHIN 5 FEET OF VALVE BOX LID.
3. BLUE "V" (3") CUT INTO FACE OF NEAREST CURB AND POINTING TOWARD THE VALVE.
4. ALL IRON MATERIALS SHALL BE DOMESTIC. (MADE IN USA)
5. CRUSHED STONE SHALL BE 3/4", PASSING #4 SIEVE.

Addison! PUBLIC WORKS DEPARTMENT | VALVE SETTING BOX | STANDARD CONSTRUCTION DETAILS WATER | DATE: AUGUST, 2010 | REV DATE: - | SHEET : SD-W09

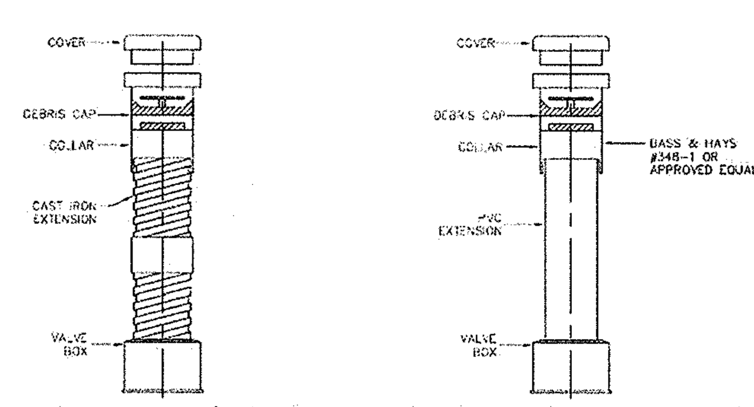

NOTE
1. ALL CAST IRON FITTINGS SHALL BE DOMESTIC. (MADE IN U.S.A.)
2. VALVE BOXES SHALL BE PROVIDED FOR BURIED VALVES. THESE BOXES SHALL BE THREE (3) PIECE SCREW TYPE CAST IRON OF THE EXTENSION TYPE AND SHALL BE: BASS & HAYS THREE (3) PIECE ADJUSTABLE SCREW TYPE, EAST JORDAN IRON WORKS 8560 W/ 6800 LID, MUELLER NO. H-10360 OR APPROVED EQUAL. THE THREE (3) PIECES SHALL CONSIST OF THE TOP SECTION, BOTTOM SECTION AND COVER.

Addison! PUBLIC WORKS DEPARTMENT | VALVE BOX WITH EXTENSION | STANDARD CONSTRUCTION DETAILS WATER | DATE: AUGUST, 2010 | REV DATE: - | SHEET : SD-W10

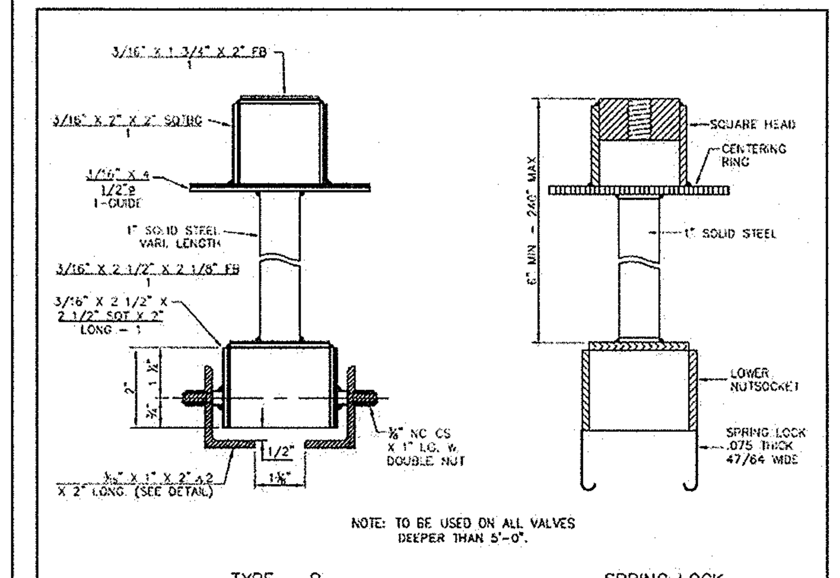

NOTE: TO BE USED ON ALL VALVES DEEPER THAN 5'-0".

TYPE - B
VALVE EXTENSION

SPRING LOCK
VALVE EXTENSION

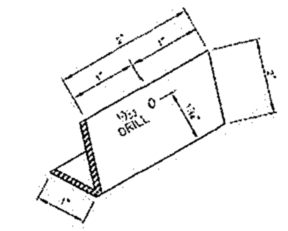

DETAIL

Addison! PUBLIC WORKS DEPARTMENT | VALVE EXTENSION | STANDARD CONSTRUCTION DETAILS WATER | DATE: AUGUST, 2010 | REV DATE: - | SHEET : SD-W11

NOTE:
1. DESIGN, SITE REQUIREMENTS, THE GENERAL OPERATION, PAINTING AND DELIVERY OF ALL FIRE HYDRANTS SHALL BE IN ACCORDANCE WITH THE TOWN OF ADDISON WATER SYSTEM REQUIREMENTS.
2. FIRE HYDRANTS SHALL BE LOCATED A MINIMUM OF 18" OUTSIDE OF THE AREA BETWEEN THE P.C.'S OF THE CORNER TURNING RADIUS AT INTERSECTIONS AND DRIVEWAYS (SEE PLAN VIEW).

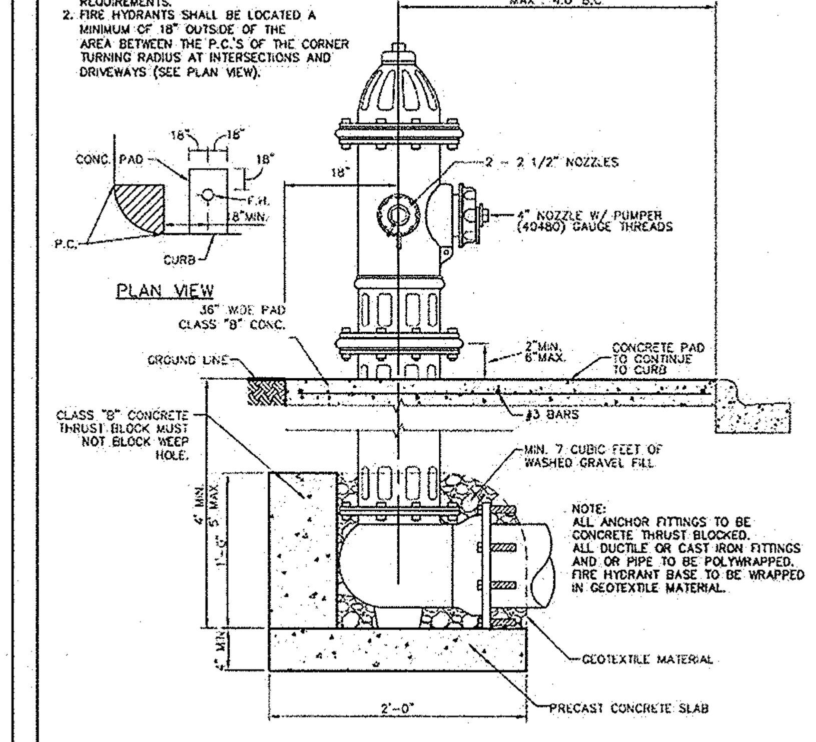

TYPICAL FIRE HYDRANT INSTALLATION

Addison! PUBLIC WORKS DEPARTMENT | TYPICAL FIRE HYDRANT INSTALLATION | STANDARD CONSTRUCTION DETAILS WATER | DATE: AUGUST, 2010 | REV DATE: - | SHEET : SD-W16

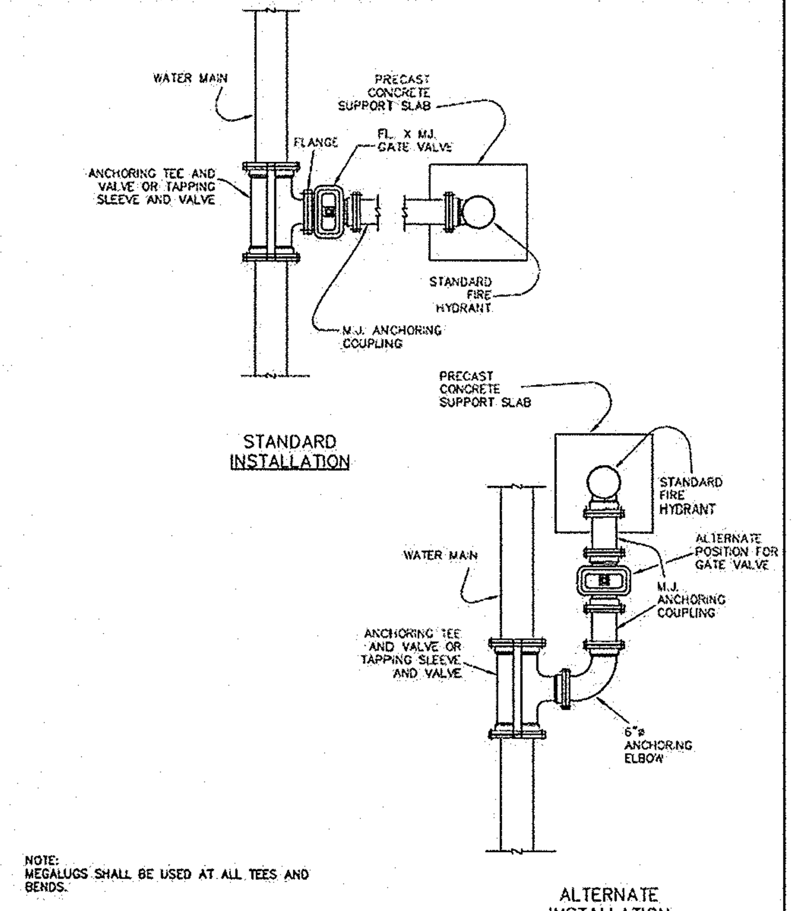

NOTE:
MEGALUGS SHALL BE USED AT ALL TEES AND BENDS.

ALTERNATE
INSTALLATION

Addison! PUBLIC WORKS DEPARTMENT | TYPICAL FIRE HYDRANT INSTALLATION | STANDARD CONSTRUCTION DETAILS WATER | DATE: AUGUST, 2010 | REV DATE: - | SHEET : SD-W17

NOTE
6"ø STEEL PIPE W/CONCRETE FILL 6' LENGTH (3' ABOVE PAVING, 3' BELOW PAVING) WITH 1-#4X5'-6" TO BE CASED IN 18"ø PIER TO DEPTH OF 1'-0" BELOW BOTTOM OF PIPE. USE 2-#6x12" REBAR THRU PIPE INTO CONCRETE PIER. PIPES TO BE PAINTED TRAFFIC YELLOW W/ 6" WHITE RELECTOR TAPE.

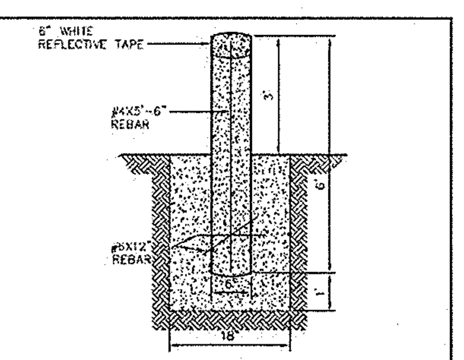

GUARD POST SECTION

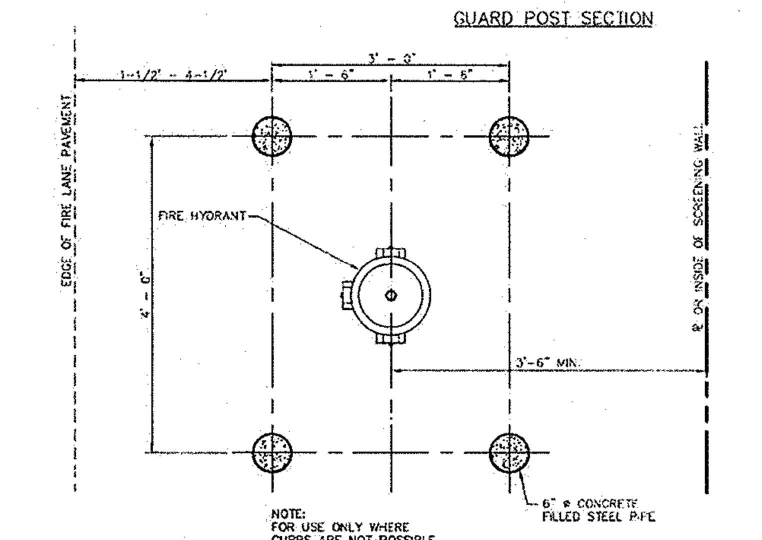

NOTE:
FOR USE ONLY WHERE CURBS ARE NOT POSSIBLE.

FIRE HYDRANT GUARD POST DETAIL

Addison! PUBLIC WORKS DEPARTMENT | FIRE HYDRANT GUARD POST | STANDARD CONSTRUCTION DETAILS WATER | DATE: AUGUST, 2010 | REV DATE: - | SHEET : SD-W18

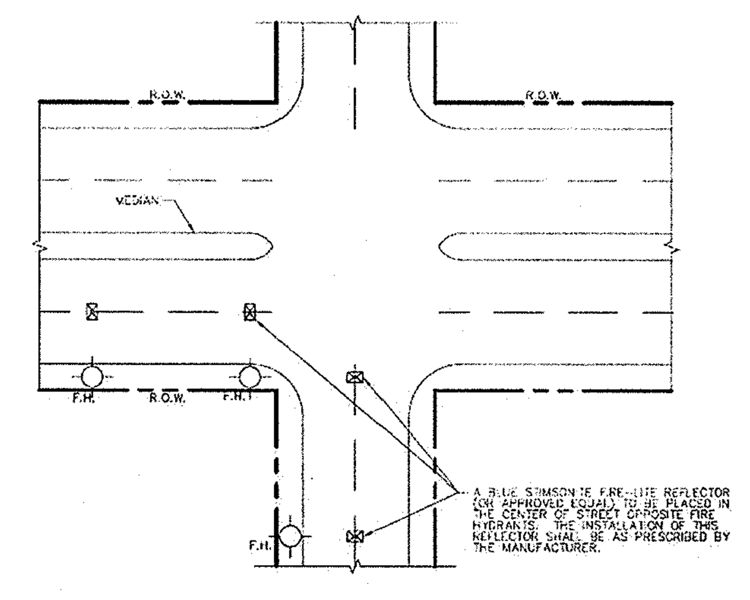

NOTE:
FIRE HYDRANT SHALL BE LOCATED OUTSIDE OF RADIUS.

TYPICAL FIRE HYDRANT REFLECTOR
INSTALLATION

Addison! PUBLIC WORKS DEPARTMENT | FIRE HYDRANT REFLECTOR INSTALLATION | STANDARD CONSTRUCTION DETAILS WATER | DATE: AUGUST, 2010 | REV DATE: - | SHEET : SD-W19

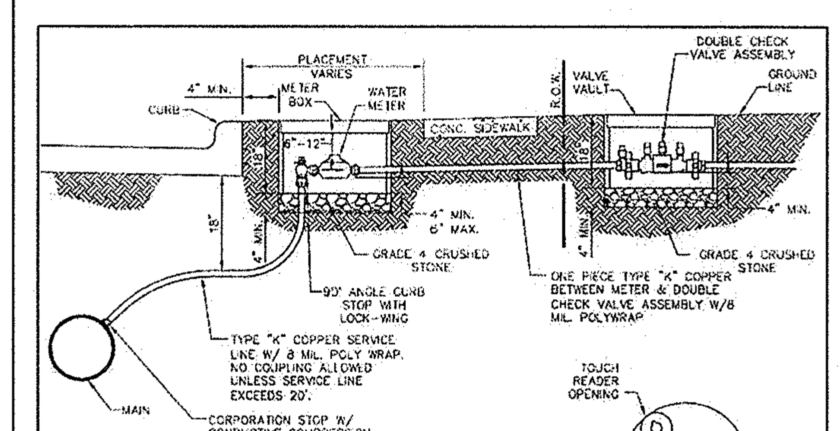

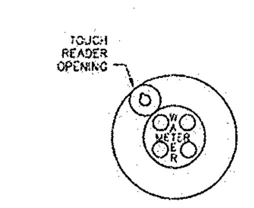

METER TOP

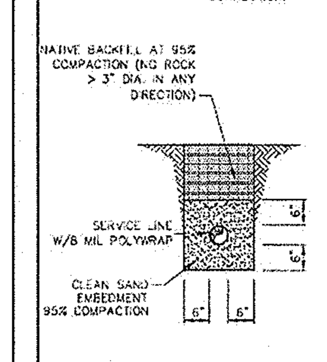

GENERAL INSTALLATION NOTES:
1. WATER METER SHALL BE PLACED IN CENTER OF LOT WITH THE SANITARY SEWER SERVICE TO BE LOCATED 10' DOWNSTREAM.
2. METER AND BOX SHALL BE SET BY THE CONTRACTOR TO ADDISON STANDARDS IN ALL CASES.
3. THE METER BOX SHALL BE SET WITHIN THE R.O.W. OR A DEDICATED UTILITY EASEMENT. IN ALL CASES, THE METER BOX SHALL BE PROTECTED FROM VEHICULAR TRAFFIC.
4. WATER SERVICES SHALL NOT BE CONNECTED TO DEAD END LINES OR FIRE HYDRANT LEADS.
5. ALL MATERIALS SHALL CONFORM TO THE TOWN OF ADDISON WATER SYSTEM REQUIREMENTS.

Type "K" Copper Service Pipe.	Double Strap Bronze Service Saddle with C.C. Threads	East Jordan Iron Works Galvanized Meter Box With Iron Ring & Cover				
		Min. Dia.	Covers & Rigns	Min. Ht.	Min. Can Weight	Min. Total Weight
3/4 Inch	3/4 Inch	18 Inches	12⅝ Inches	18 Inches	13 lbs.	42 lbs.
1 Inch	1 Inch	24 Inches	20⅛ Inches	18 Inches	17 lbs.	98 lbs.
1 1/2 Inch	1 1/2 Inch	28 Inches	20⅛ Inches	18 Inches	20 lbs.	127 lbs.
2 Inch	2 Inch	28 Inches	20⅛ Inches	18 Inches	20 lbs.	127 lbs.

Addison! PUBLIC WORKS DEPARTMENT | SERVICE CONNECTION WITH METER BOX | STANDARD CONSTRUCTION DETAILS WATER | DATE: AUGUST, 2010 | REV DATE: - | SHEET : SD-W20

RECORD DRAWINGS
(October 2013)
Information Provided By:
BOB MOORE
CONSTRUCTION

No.	REVISIONS	DATE	BY

Kimley-Horn and Associates, Inc.
State of Texas Registration No. F-928
5750 GENESIS COURT, SUITE 200, FRISCO, TX 75034
PHONE: 972-335-3580 FAX: 972-335-3779
WWW.KIMLEY-HORN.COM

STATE OF TEXAS
ROY BRASWELL
104908
LICENSED
PROFESSIONAL ENGINEER
6/14/13

KHA PROJECT 063319038
DATE 06/14/2013
SCALE AS SHOWN
DESIGNED BY TBB
DRAWN BY AAE
CHECKED BY TBB

VILLAGE ON THE PARKWAY PHASE II
ADDISON, TEXAS

TOWN OF ADDISON WATER DETAILS

SHEET NUMBER
C-18