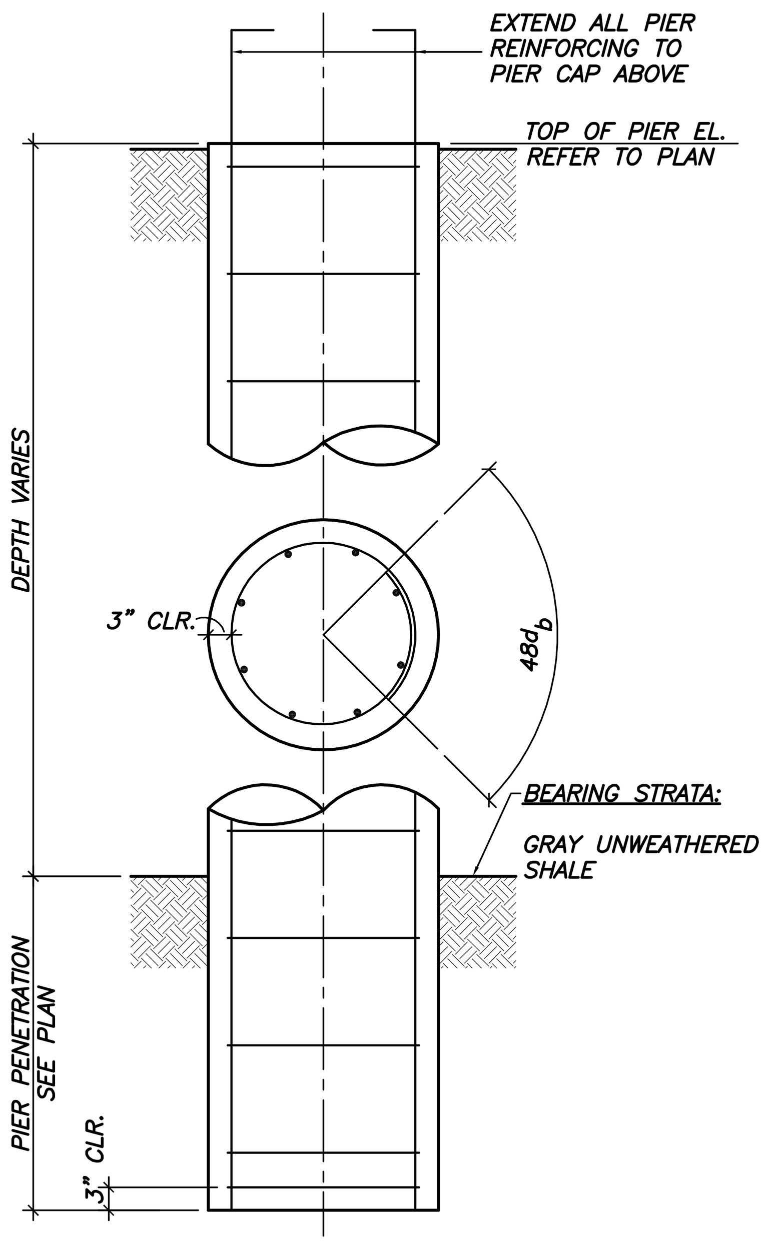

01 GROTTO PIER DETAIL
N.T.S.

TYPICAL PIER REINFORCING:

24"ø PIER SHAFT – TYPICAL
12– #9 VERTICAL Fc' = 4000 PSI
TIES:
#3 @ 12" O.C.

24"ø PIER SHAFT – TYPE "A"
10– #8 VERTICAL Fc' = 4000 PSI
TIES:
#3 @ 12" O.C.

24"ø PIER SHAFT – TYPE "B"
8– #7 VERTICAL Fc' = 4000 PSI
TIES:
#3 @ 12" O.C.

18"ø PIER SHAFT – TYPICAL
6– #6 VERTICAL Fc' = 4000 PSI
TIES:
#3 @ 10" O.C.

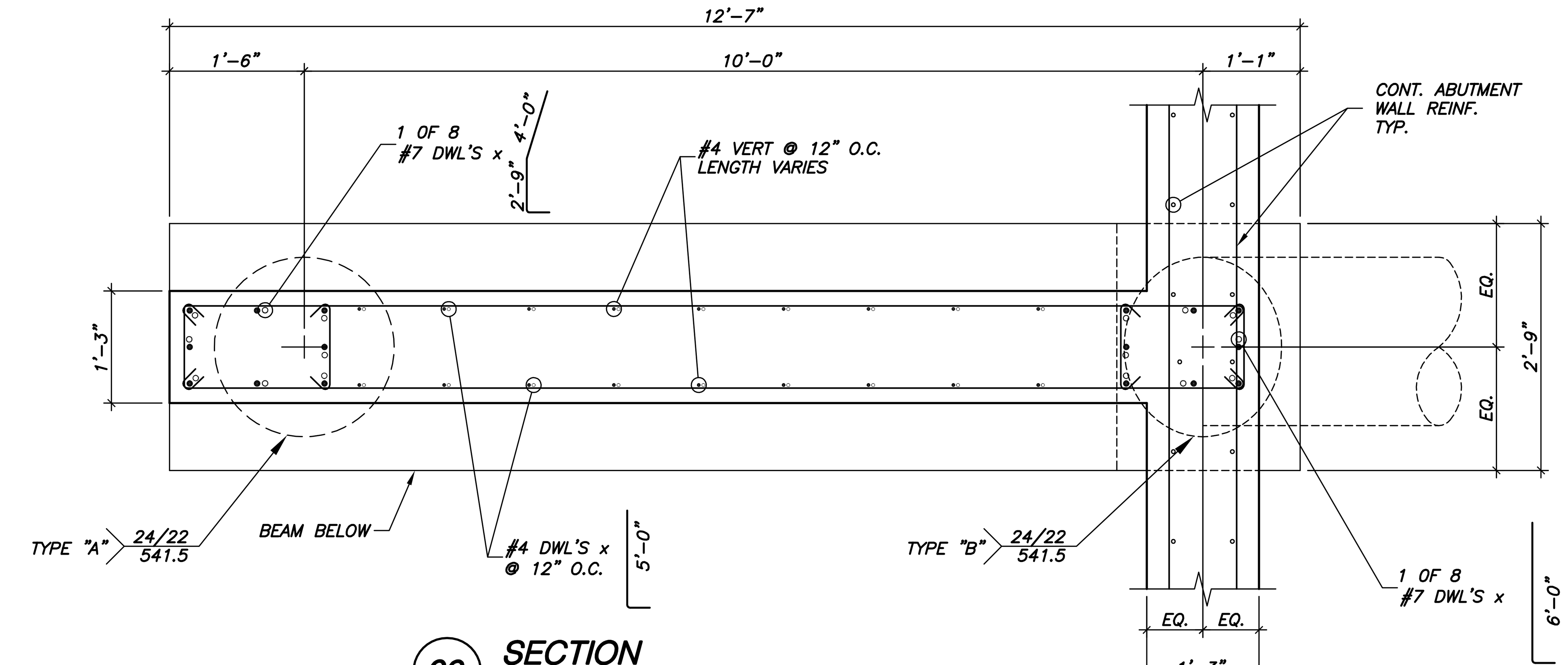

02 SECTION
¾"=1'–0"

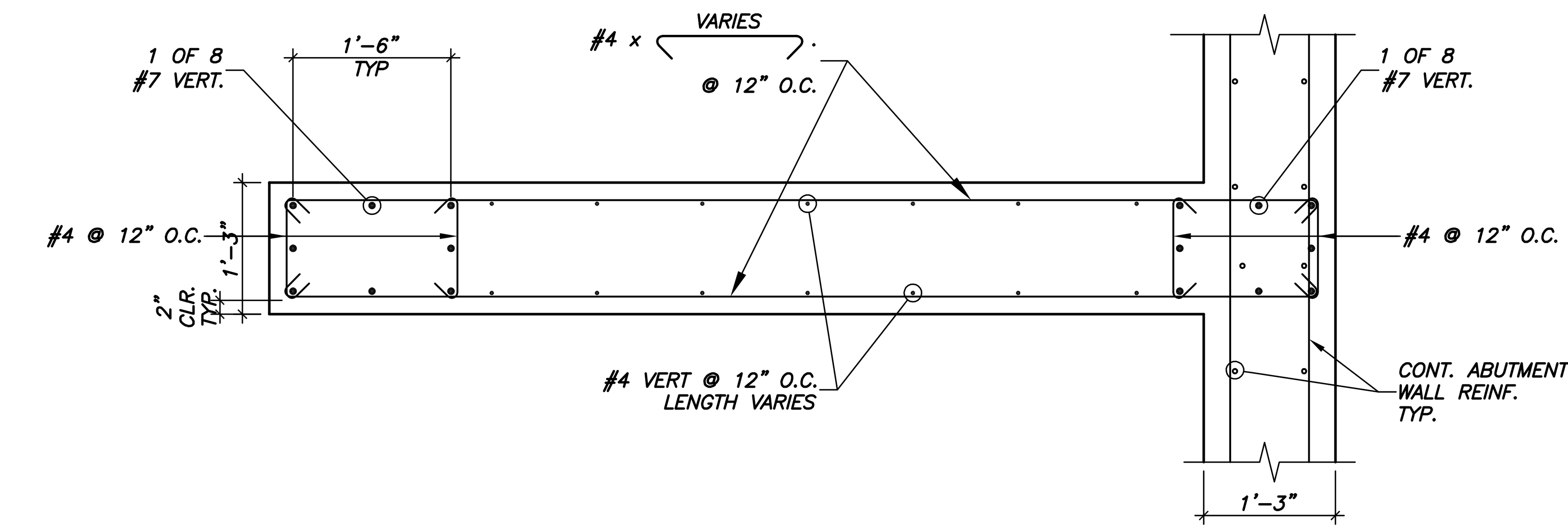

03 SECTION
¾"=1'–0"

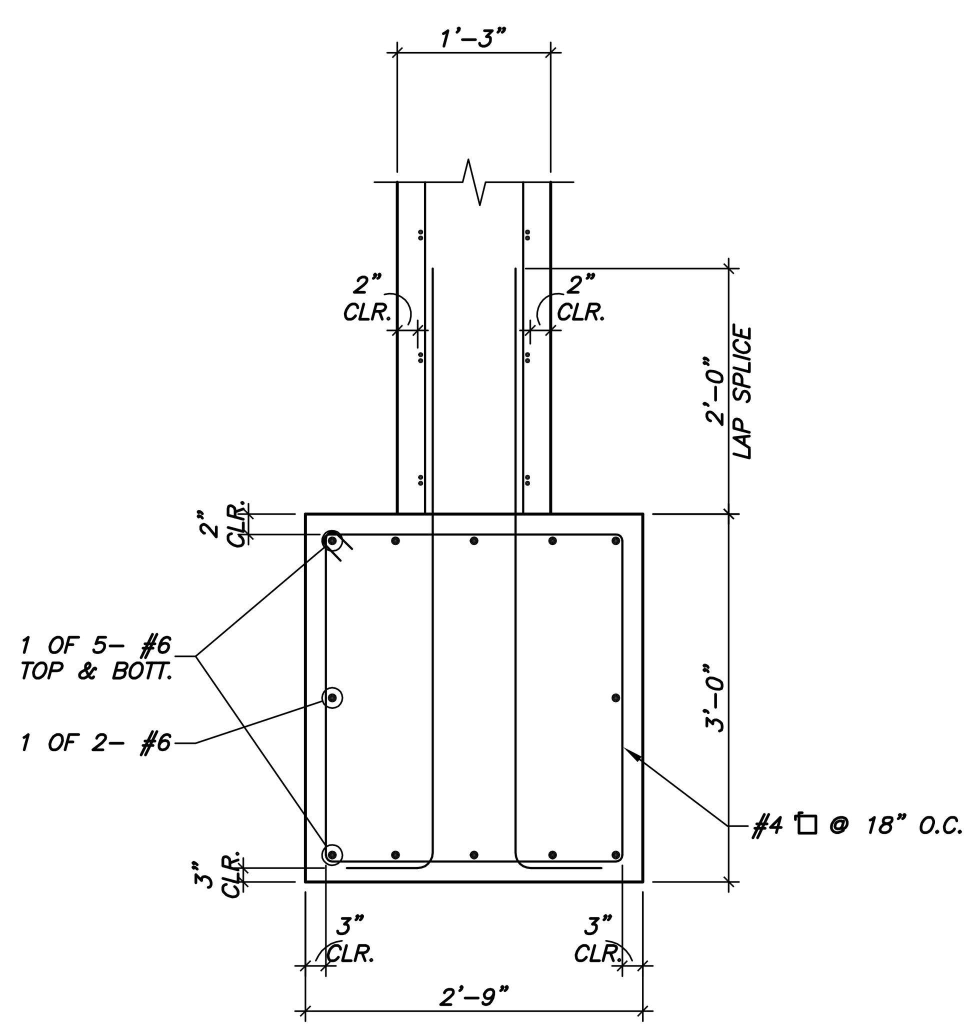

04 SECTION
¾"=1'–0"

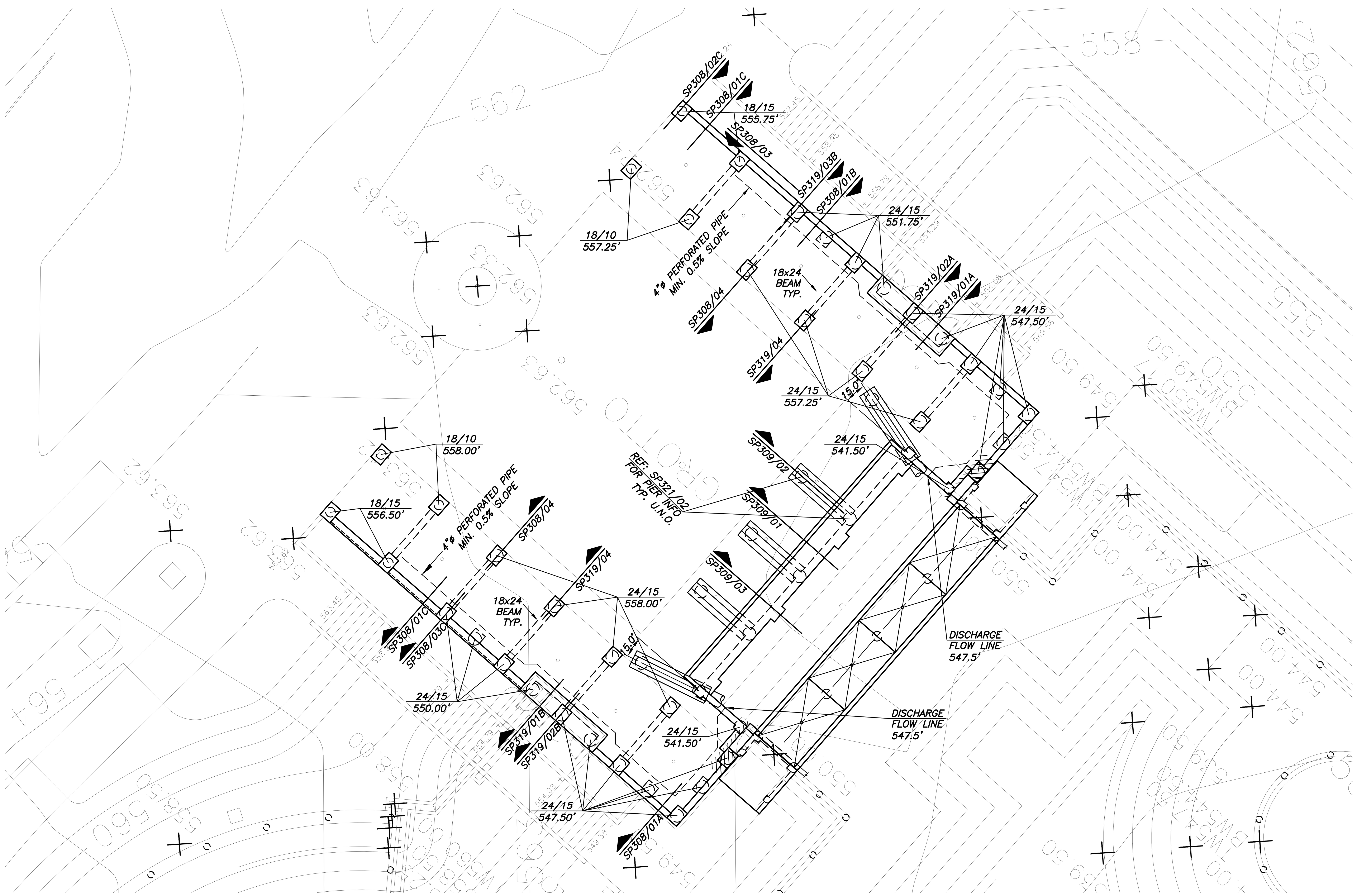

01 GROTTO PARTIAL PLAN VIEW
3/32"=1'–0"

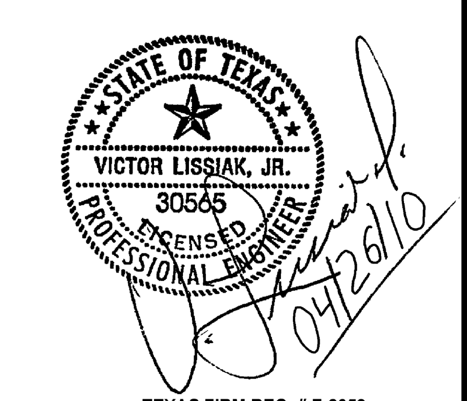

TEXAS FIRM REG. # F-2658

ISSUED FOR CONSTRUCTION 04/26/10

NO.	REVISION	BY	DATE

Addison! TOWN OF ADDISON
DALLAS COUNTY, TEXAS

PARK AND STREETSCAPE IMPROVEMENTS
VITRUVIAN PARK

SECTIONS & DETAILS

VIEWTECH INC.
Structural Engineers
4205 Beltway Dr. - Addison, Texas 75001
(972) 661-8187 Fax (972) 661-8172

PROJECT	DESIGN	DRAWN	DATE	FILE	SHEET
5029–01	VL	NERF	APRIL 26 2010	PW#2009–04	SP321