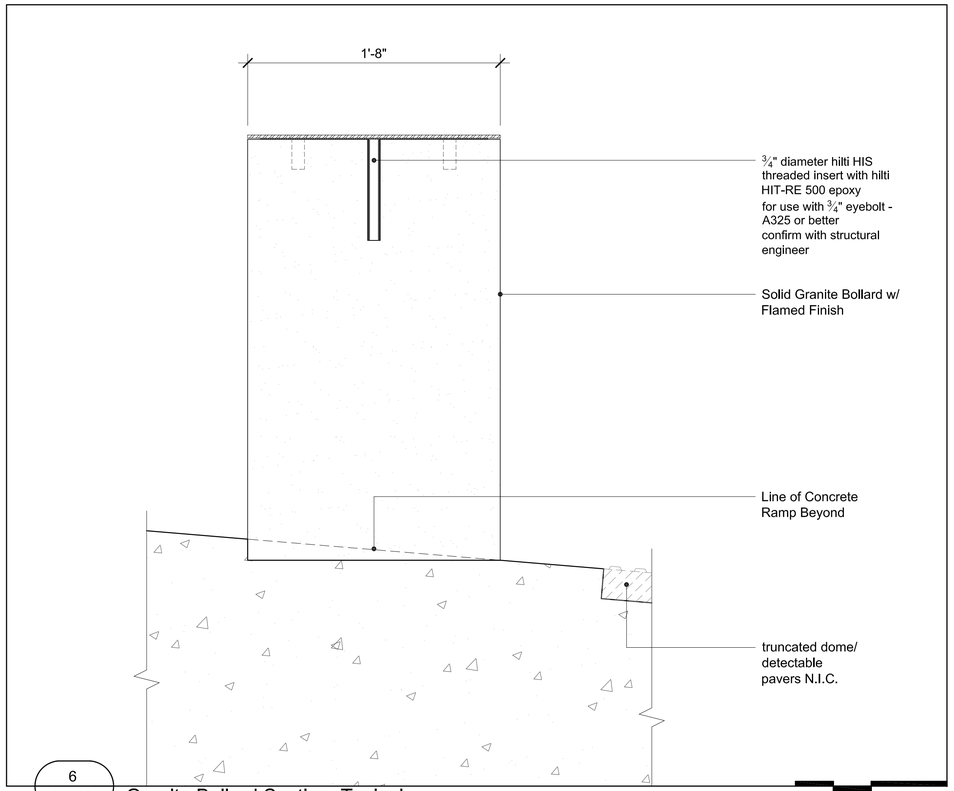

6 L1-11 Granite Bollard Section, Typical

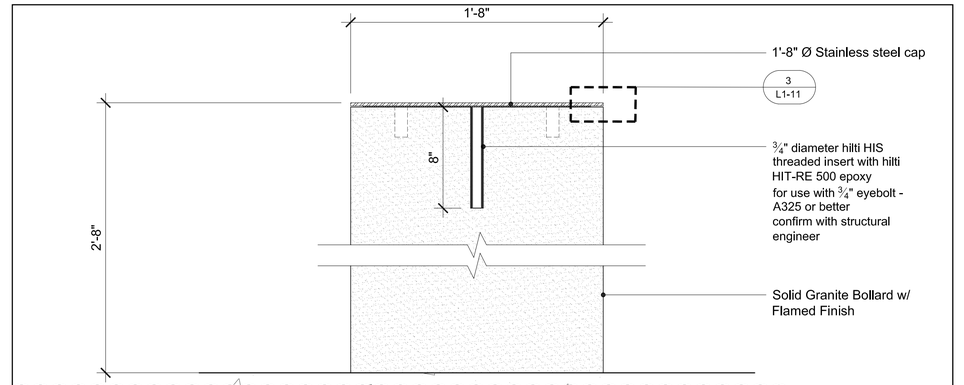

5 L1-11 Granite Bollard Section, Typical

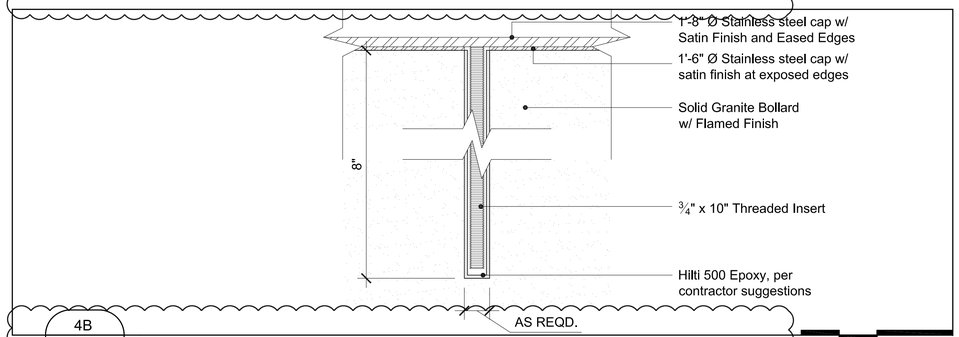

4B L1-11 ¾" x 10" threaded insert for lifting centered in top of bollard, per Viewtech

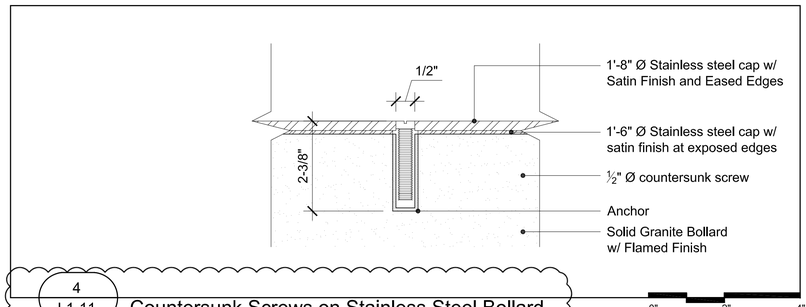

4 L1-11 Countersunk Screws on Stainless Steel Bollard Cap Detail, Typical

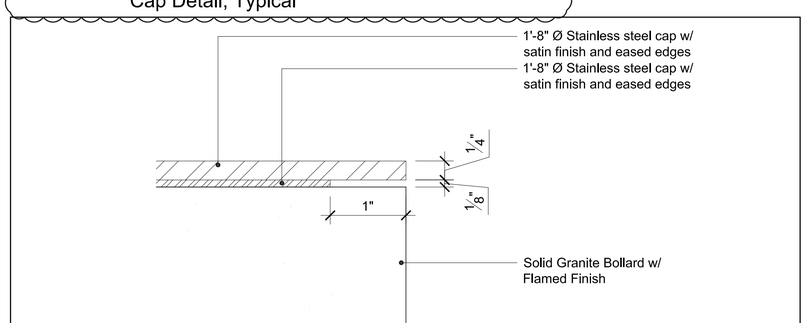

3 L1-11 Bollard Stainless Steel Cap Detail

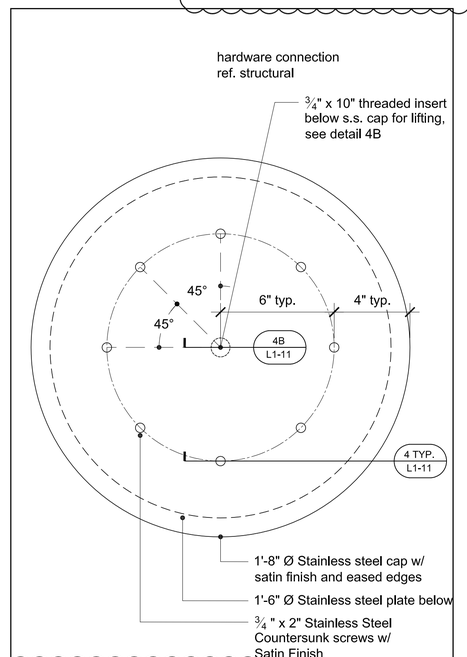

2 L1-11 Granite Bollard Plan, Typical

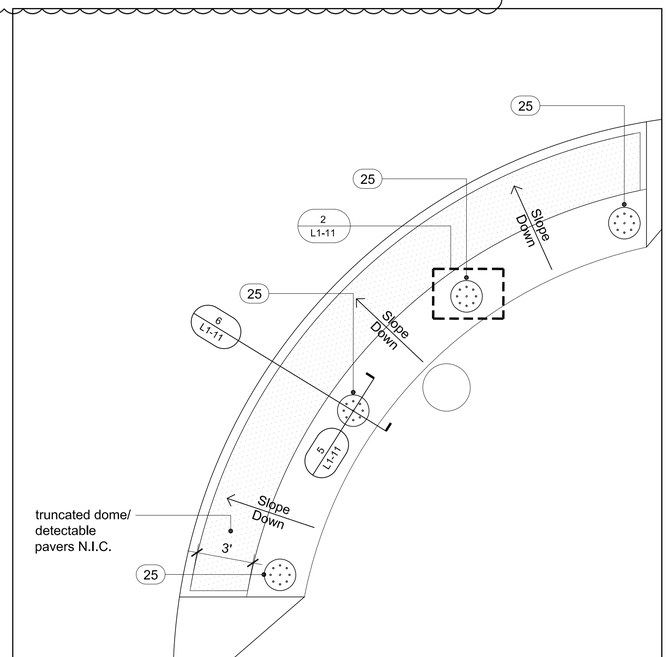

1 L1-11 Granite Bollard Plan, Typical

GENERAL NOTE

Refer to sheet L1-01 Design Selection Summary for specific product, finishes, and colors.

Refer to sheets L1-12 & L1-13 for furniture and park element details.

LEGEND

1. Project Limit
2. Not in Contract (N.I.C.): Information provided for design intent only.
3. Planting Area: Ref. L10-00's & L11-00's
4. Expansion Joint: Ref. Civil for detail
5. Tooled Control Joint: Ref. Civil for detail
6. Concrete Paving A
7. Concrete Paving B
8. Concrete Paving C
9. Concrete Paving D
10. Concrete Wall: ref. Structural
11A. Pavestone Concrete Paver A
11B. Pavestone Concrete Paver B
11C. Pavestone Concrete Paver C
11D. Pavestone Concrete Paver D
11E. Pavestone Concrete Paver E
12. Structural Concrete Masonry Unit Wall
13. Structural Fill: Reference Structural
14. Transformer/Switchgear: Ref. Civil
15. Drain Grate
16. Atrium Grate
17. Paver Grate
18. Metal Pergola
19. Metal Trellis
20. Trellis Above
21. Light Fixture Above
22. Metal Guard Rail
23. Metal Handrail
24. Metal Guard Rail and Handrail
25. Granite Bollard
26. Composite Decking
27. Concrete Pier: Locate in field to avoid conflict with existing tree roots - Ref. Structural
28. Structural Steel Beam: Ref. Structural
29. Structural Framing: Ref. Structural
30. Structural Steel Channel: Ref. Structural
31. Concrete walkway: Ref. Civil & Structural
32. Bridge: N.I.C. (Not In Contract)
33. Building Beyond: N.I.C. (Not In Contract)
34. Guardrail Beyond
35. Concrete Form Ties
36. Vertical Control Joints: Ref. Structural
37. Concrete Bench
38. Lake Edge Wall: Ref. Structural
39. Concrete Wall Beyond
40. Electrical: Ref. Civil
41. Concrete Curb - Reference structural
42. Access Panel - Reference structural
43. Vertical Control Joints: Ref. Structural
44. Concrete Weir: Reference Structural
45. Water
46. Hollow Metal Door and Frame
47. Existing Wooden Fence
48. Metal Gate
49. Limestone Boulder
50. Stone Veneer
60. Fully Grouted Beach Pebbles
61. Not Used
62. Not Used
63. Fountain Pool: Ref. Fountain Consultant
64. Fountain Water Supply Line: Reference Fountain Consultant
65. Fountain Drain Line: Reference Fountain Consultant
66. Not used
67. Not used
68. Pedestal Drinking Fountain
69. Litter Receptacle
70. Bench
71. Pet Waste Disposal System
72. Bike Rack
73. Gravel
74. Limestone Slab

NO.	REVISION	BY	DATE
1	REVISIONS	KSS	04/04/2011

TOWN OF ADDISON
DALLAS COUNTY, TEXAS

PARK AND STREETSCAPE IMPROVEMENTS
VITRUVIAN PARK

BOLLARD DETAILS

KEVIN SLOAN STUDIO
2400 Empire Central, Suite F
Dallas, Texas 75235 (214) 459-1784

PROJECT	DESIGN	DRAWN	DATE	FILE	SHEET
5029-01	KWS	MM	APR 26, 2010	PW # 2009-04	L1-11

PARK AND STREETSCAPE IMPROVEMENTS - VITRUVIAN PARK