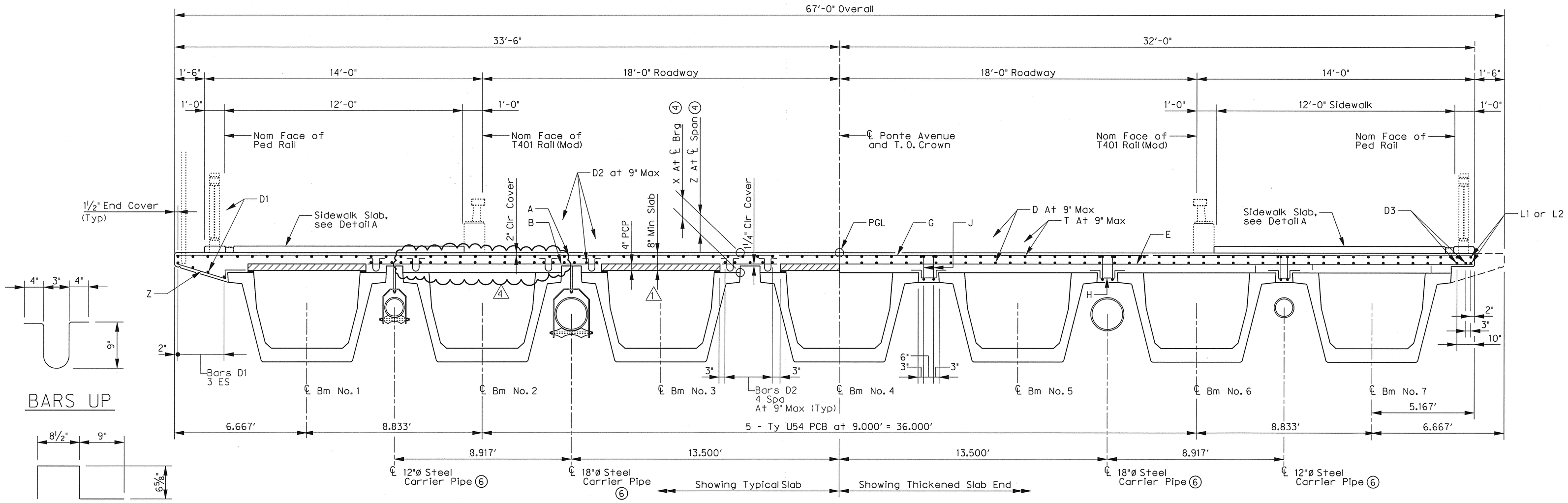

SECTION A-A
SCALE: ⅜" = 1'-0"

BARS UP

BARS P

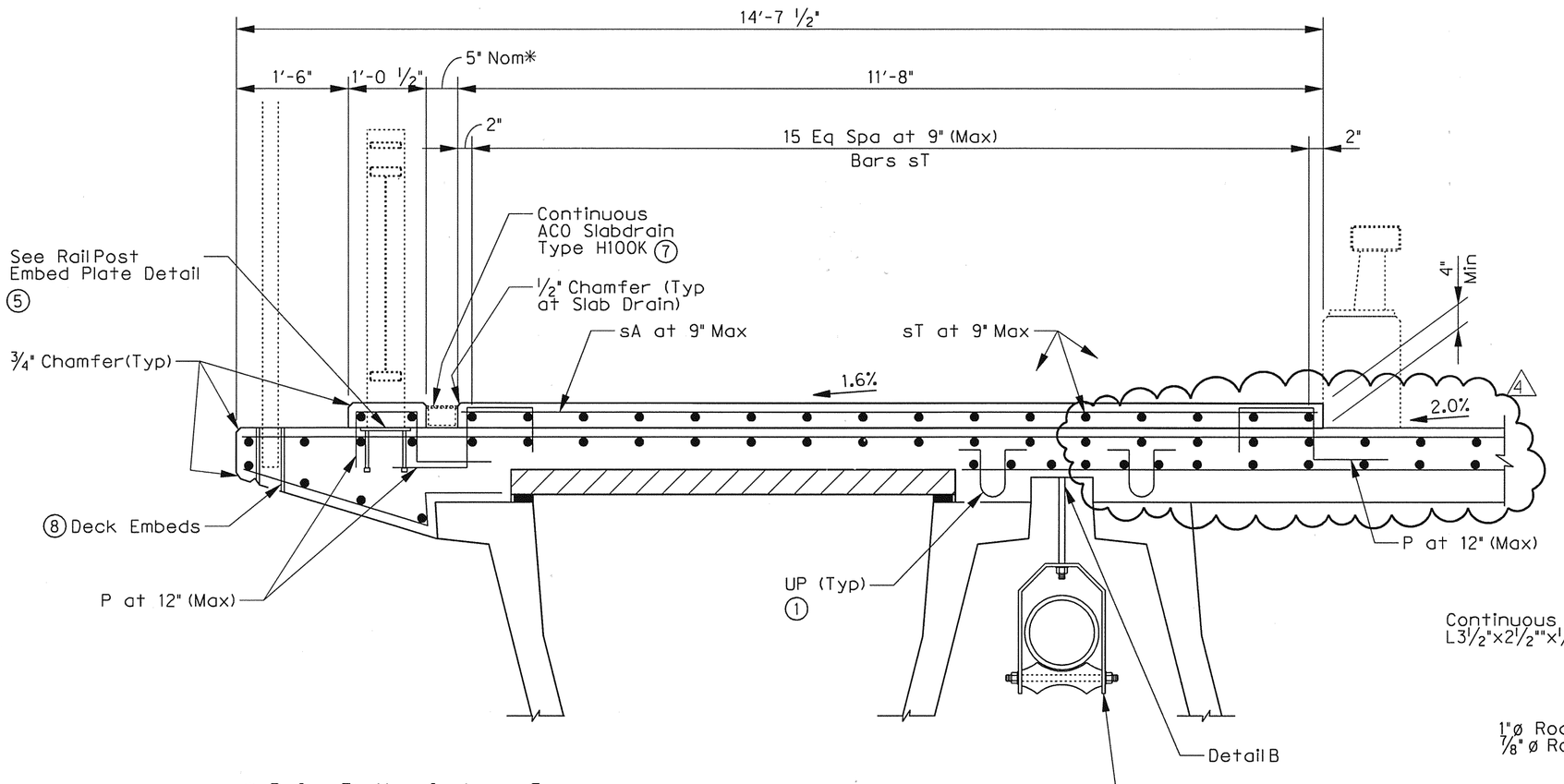

* Refer To Manufacturer For Slab Drain Dimensions.

DETAIL A
SCALE: ¾" = 1'-0"

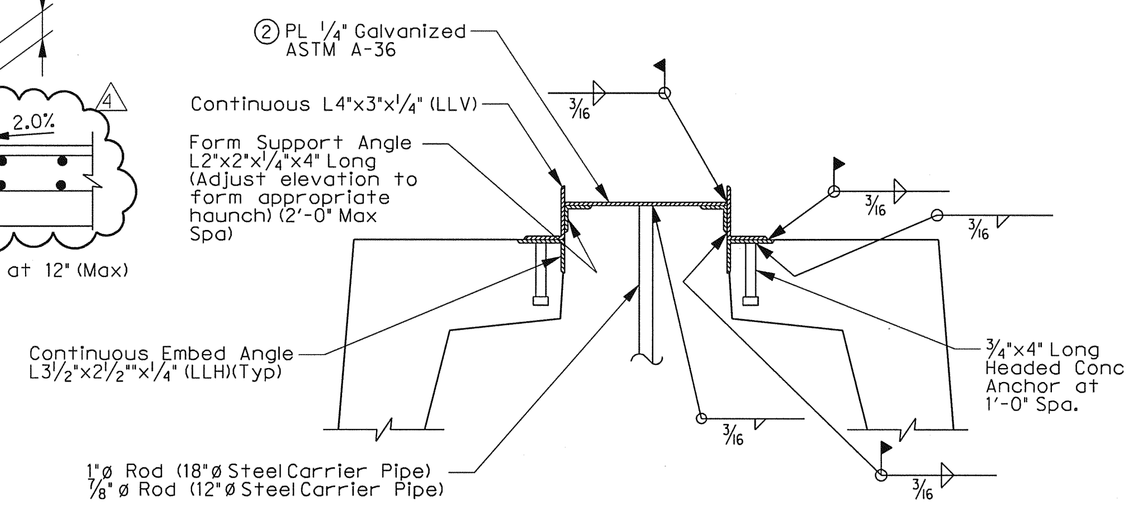

DETAIL B
SCALE: NTS

① Space bars UP with beam bars R in all areas where measured haunch exceeds 3".

② Replace galvanized sheet steel with a ¼" galvanized steel plate see UBMS standard for galvanized sheet steel detail.

③ Copper B-line B3110-18 (18" ø steel carrier pipe) spaced at 6'-0" Max C.C.
Copper B-line B3110-12 (12" ø steel carrier pipe) spaced at 6'-0" Max C.C.
Pipe supports are subsidiary to Steel Pipe Item 442, Misc. Steel.

④ See sheet 1 of 2 for table of dimensions.

⑤ Leave the bottom 1 inch of post ungalvanized.

⑥ 18"ø steel pipe shall be schedule 40 pipe with 18" O.D. 12"ø steel pipe shall be schedule 40 with 12' O.D. All steel pipes shall be galvanized.

⑦ Use grate Type 410Q or 412Q galvanized steel. The contractor shall submit a sample of the grate prior to installation.

⑧ See Drawing No. S1-24 for additional details.

07-28-10
STATE OF TEXAS
ERIC S. CHRISTIANSEN
85412
LICENSED
PROFESSIONAL ENGINEER

THE SEAL APPEARING ON THIS DOCUMENT WAS AUTHORIZED BY ERIC S. CHRISTIANSEN, P.E.#85412 ON 07-28-2010. ALTERATION OF A SEALED DOCUMENT WITHOUT PROPER NOTIFICATION TO THE RESPOSIBLE ENGINEER IS AN OFFENSE UNDER THE TEXAS ENGINEERING PRACTICE ACT. THE RECORD COPY OF THIS DRAWING IS ON FILE AT THE OFFICES OF HALFF ASSOCIATES, 1201 NORTH BOWSER ROAD, RICHARDSON, TEXAS. 75081. TBPE FIRM #F-312.

NO.	REVISION	BY	DATE
4	Addendum #4	ESC	7/28/10
1	Addendum #1	ESC	5/14/10

TOWN OF ADDISON
DALLAS COUNTY, TEXAS

VITRUVIAN PARK BRIDGES
PONTE AVENUE

DECK DETAILS

HALFF
1201 NORTH BOWSER ROAD, RICHARDSON, TEXAS 75081-2275
TEL (214) 346-6200 FAX (214) 739-0095

PROJECT	DESIGN	DRAWN	DATE	FILE	SHEET
27379	ESC	AHH	APRIL 2010	-	S1-17

SHEET 2 OF 2