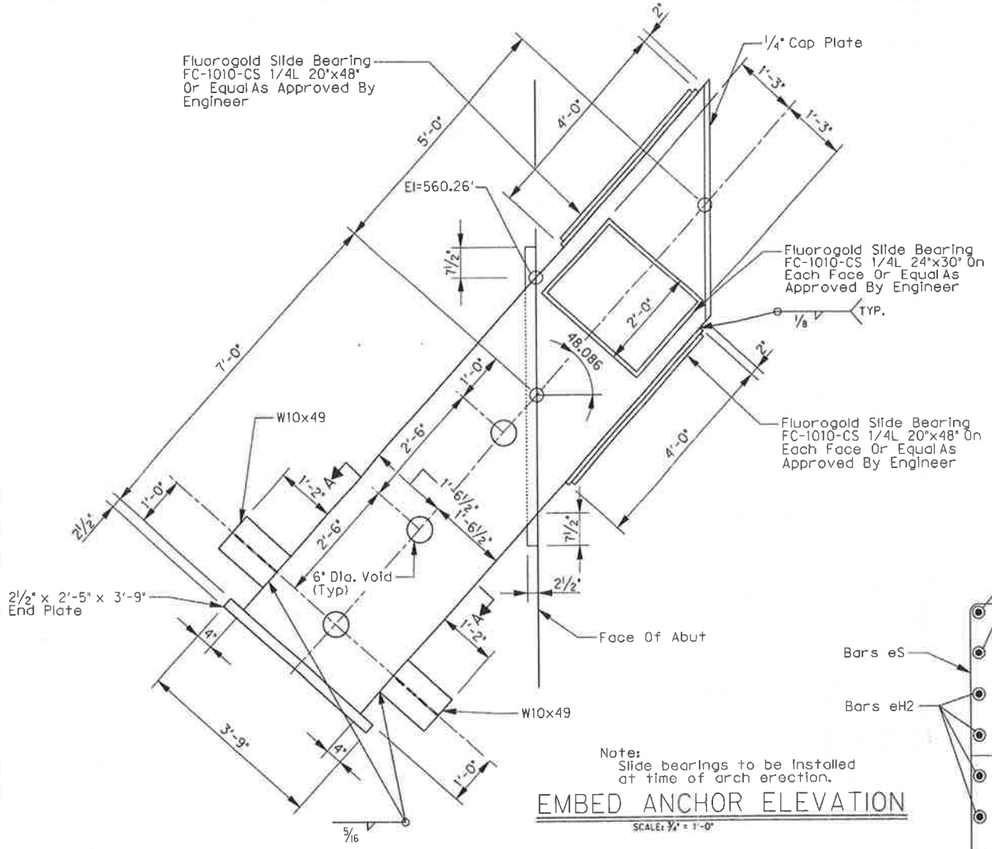

Note:
Slide bearings to be installed at time of arch erection.

EMBED ANCHOR ELEVATION

SCALE: ¾" = 1'-0"

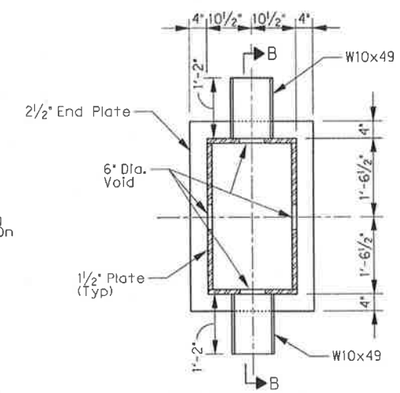

SECTION A-A

SCALE: N.T.S.

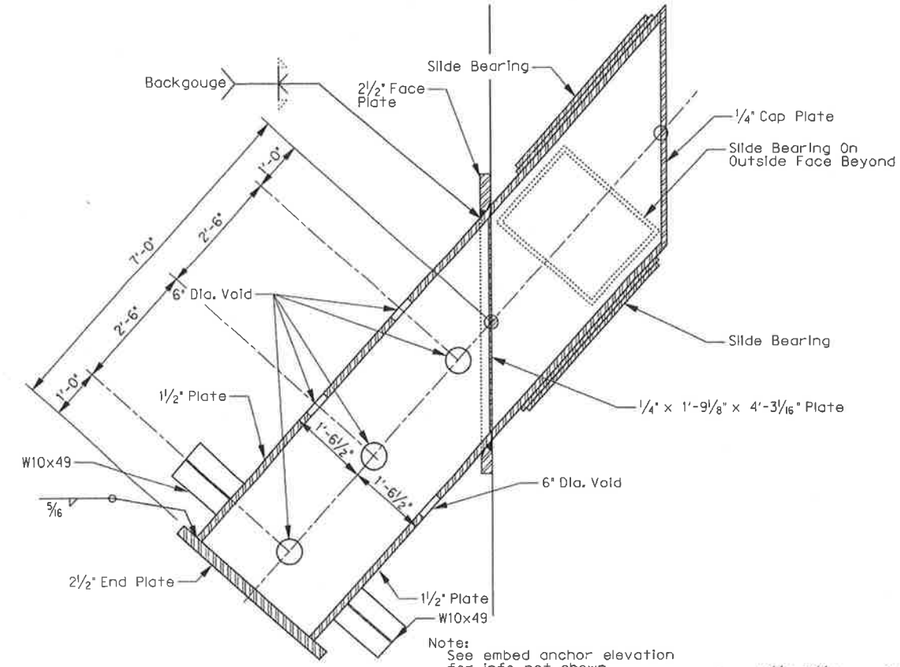

Note:
See embed anchor elevation for info not shown.

SECTION B-B

SCALE: N.T.S.

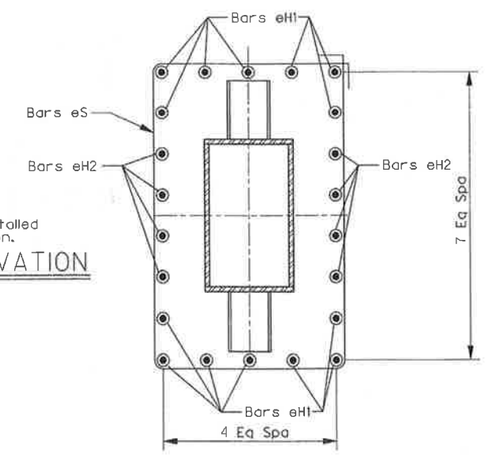

SECTION D-D

SCALE: N.T.S.

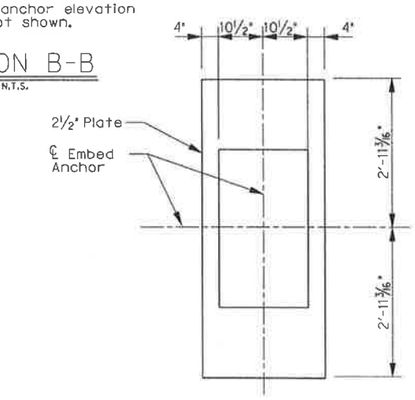

FACE PLATE

SCALE: N.T.S.

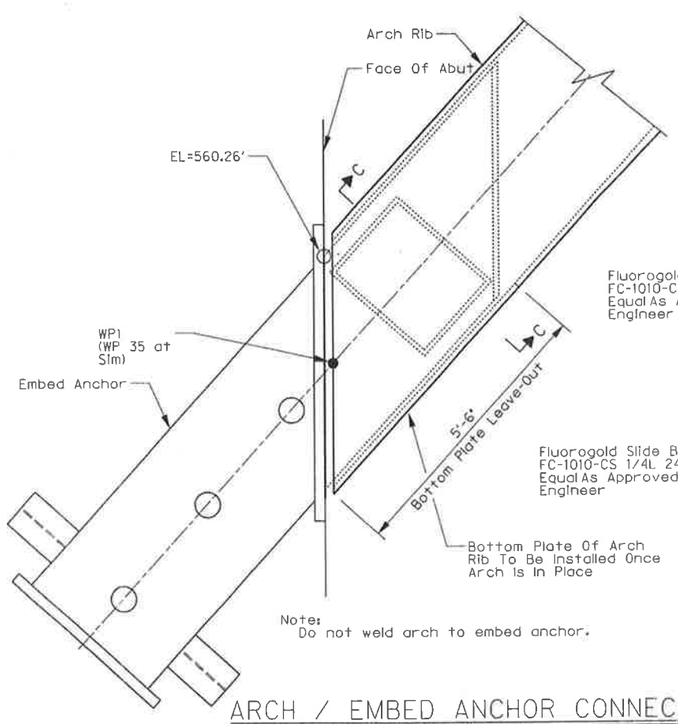

Note:
Do not weld arch to embed anchor.

ARCH / EMBED ANCHOR CONNECTION

SCALE: ¾" = 1'-0"

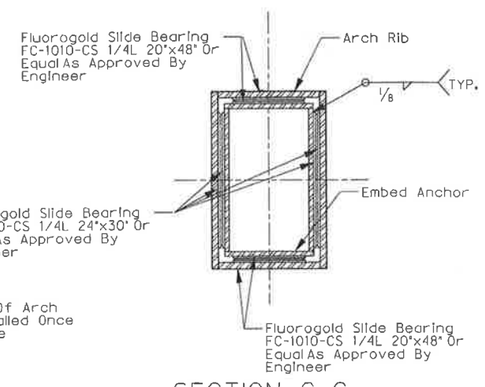

SECTION C-C

SCALE: N.T.S.

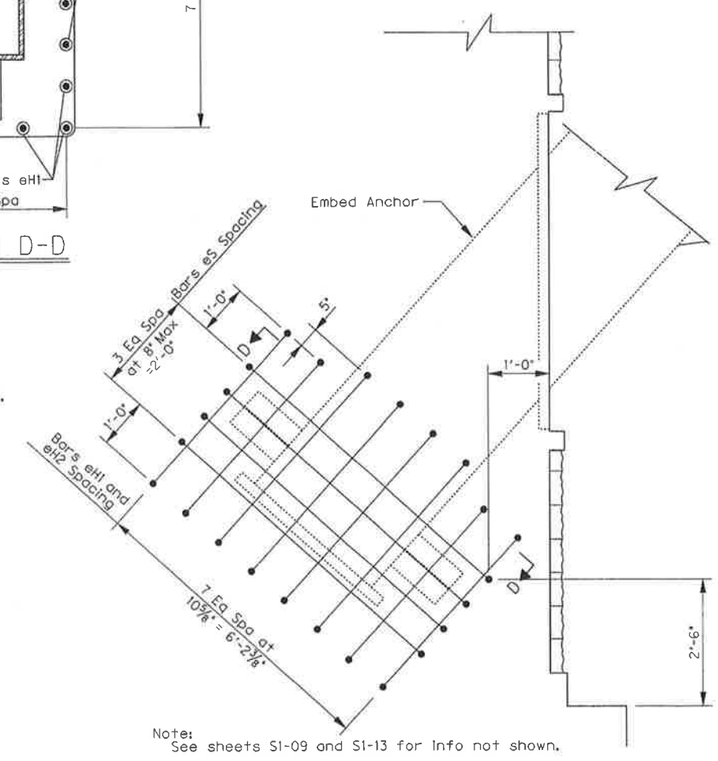

Note:
See sheets S1-09 and S1-13 for info not shown.

EMBED ANCHOR CONNECTION

SCALE: ¾" = 1'-0"

04.29.10

THE SEAL APPEARING ON THIS DOCUMENT WAS AUTHORIZED BY ERIC S. CHRISTIANSEN, P.E. #85412 ON 04-29-2010. ALTERATION OF A SEALED DOCUMENT WITHOUT PROPER NOTIFICATION TO THE RESPONSIBLE ENGINEER IS AN OFFENSE UNDER THE TEXAS ENGINEERING PRACTICE ACT. THE RECORD COPY OF THIS DRAWING IS ON FILE AT THE OFFICES OF HALFF ASSOCIATES, 1201 NORTH BOWSER ROAD, RICHARDSON, TEXAS, 75081. TBPE FIRM #F-312.

NO.	REVISION	BY	DATE

Addison. TOWN OF ADDISON
DALLAS COUNTY, TEXAS

VITRUVIAN PARK BRIDGES
PONTE AVENUE

ARCH DETAILS - EMBED DETAILS

HALFF 1201 NORTH BOWSER ROAD, RICHARDSON, TEXAS 75081-2275
TEL (214) 348-6200 FAX (214) 739-0096

PROJECT	DESIGN	DRAWN	DATE	FILE	SHEET
27379	ESC	AHH	APRIL 2010	-	S1-23