USER: ah2441
OFFICE: RCH
PROJECT # 27379
FILE: 27379-SC-BELLABL-D002.dgn
TIME: 12:34:05 PM
DATE: 4/29/2010

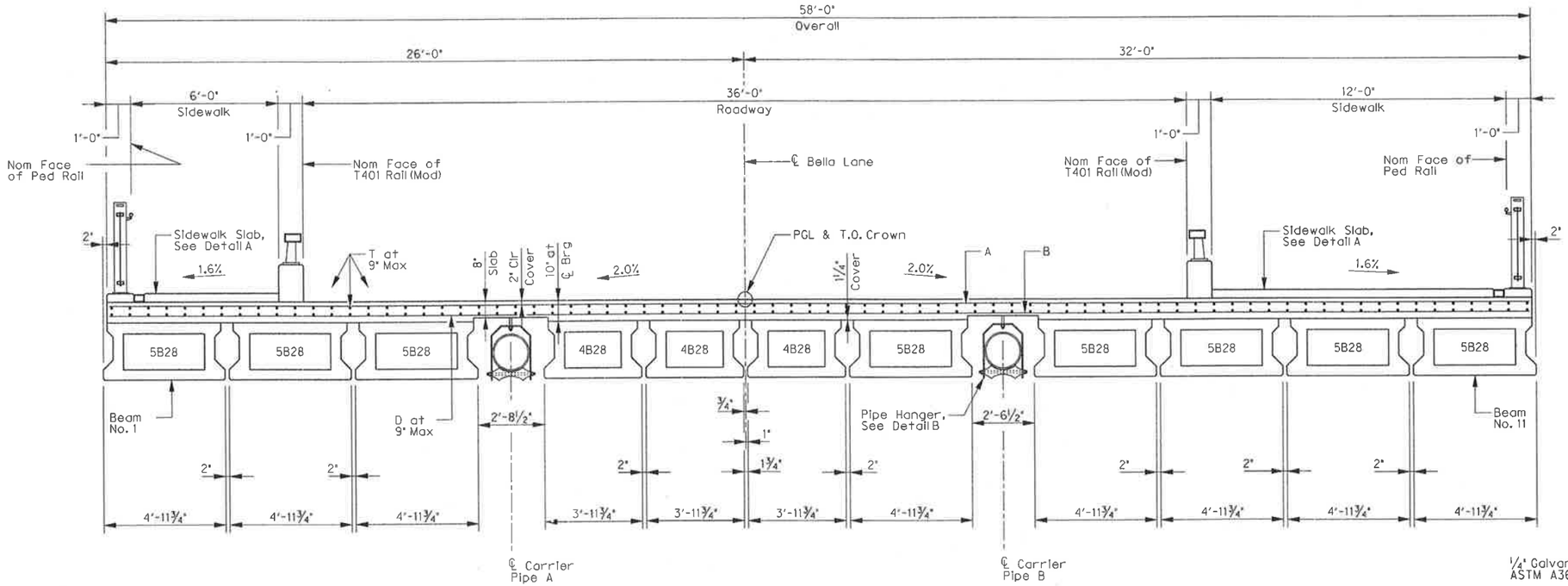

TYPICAL TRANSVERSE SECTION

SCALE: ⅜" = 1'-0"

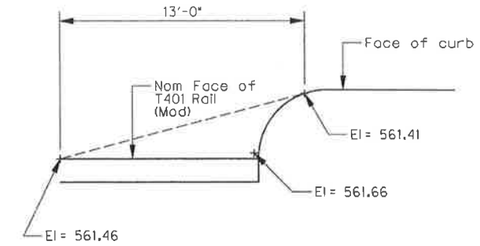

CURB DRAINAGE DETAIL

SCALE: NTS
(DETAIL IS TYPICAL AT ABUTMENT 4)

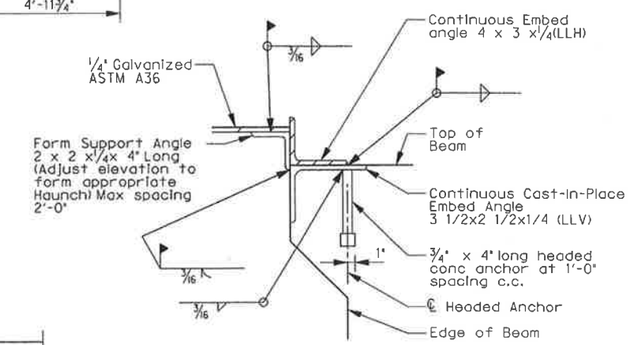

DETAIL C

SCALE: 3" = 1'-0"

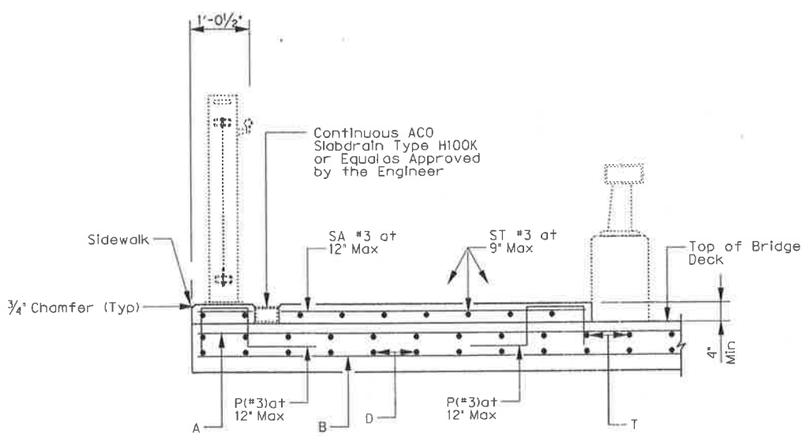

DETAIL A

SCALE: ¾" = 1'-0"
(Beams not shown for clarity)

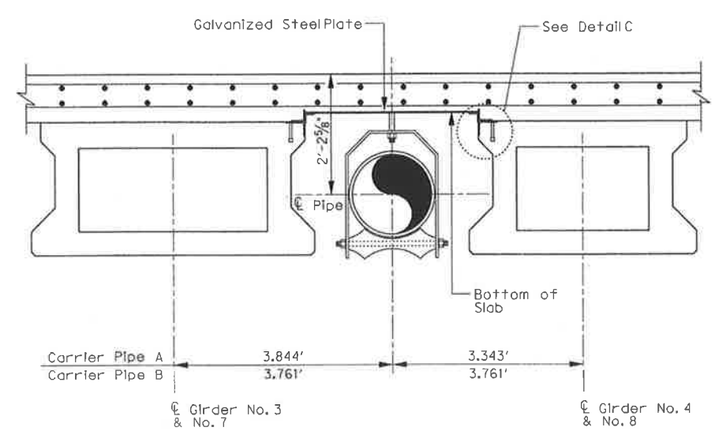

Notes: For information not shown see Pipe Hanger Assembly Typical Section/S2-14

Steel Carrier Pipe shall be 18" diameter shedule 40 pipe.

DETAIL B

SCALE: ¾" = 1'-0"

04-29-10

STATE OF TEXAS
ERIC S. CHRISTIANSEN
85412
LICENSED
PROFESSIONAL ENGINEER

THE SEAL APPEARING ON THIS DOCUMENT WAS AUTHORIZED BY ERIC S. CHRISTIANSEN, P.E. #85412 ON 04-29-2010. ALTERATION OF A SEALED DOCUMENT WITHOUT PROPER NOTIFICATION TO THE RESPONSIBLE ENGINEER IS AN OFFENSE UNDER THE TEXAS ENGINEERING PRACTICE ACT. THE RECORD COPY OF THIS DRAWING IS ON FILE AT THE OFFICES OF HALFF ASSOCIATES, 1201 NORTH BOWSER ROAD, RICHARDSON, TEXAS, 75081. TBPE FIRM #F-312.

NO.	REVISION	BY	DATE

Addison

TOWN OF ADDISON
DALLAS COUNTY, TEXAS

VITRUVIAN PARK BRIDGES
BELLA LANE

DECK DETAILS

HALFF
1201 NORTH BOWSER ROAD, RICHARDSON, TEXAS 75081-2275
TEL (214) 348-8200 FAX (214) 730-0095

PROJECT	DESIGN	DRAWN	DATE	FILE	SHEET
27379	ESC	AHH	APRIL 2010	-	S2-12