USER: ah2441
OFFICE: RCH
PROJECT = 27379
FILE: 27379-SC-BELLABL-AE05.dgn
TIME: 9:08:53 AM
DATE: 4/29/2010

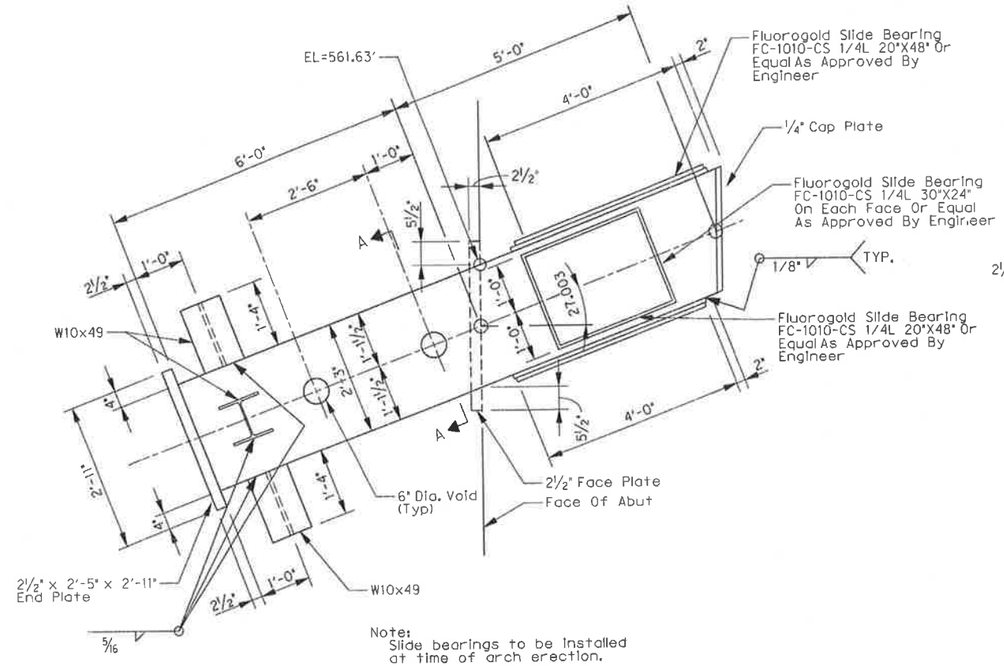


Note:
Slide bearings to be installed at time of arch erection.

## EMBED ANCHOR ELEVATION

SCALE: ¾" = 1'-0"

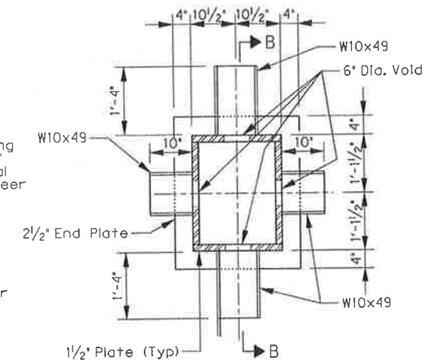


## SECTION A-A

SCALE: N.T.S.

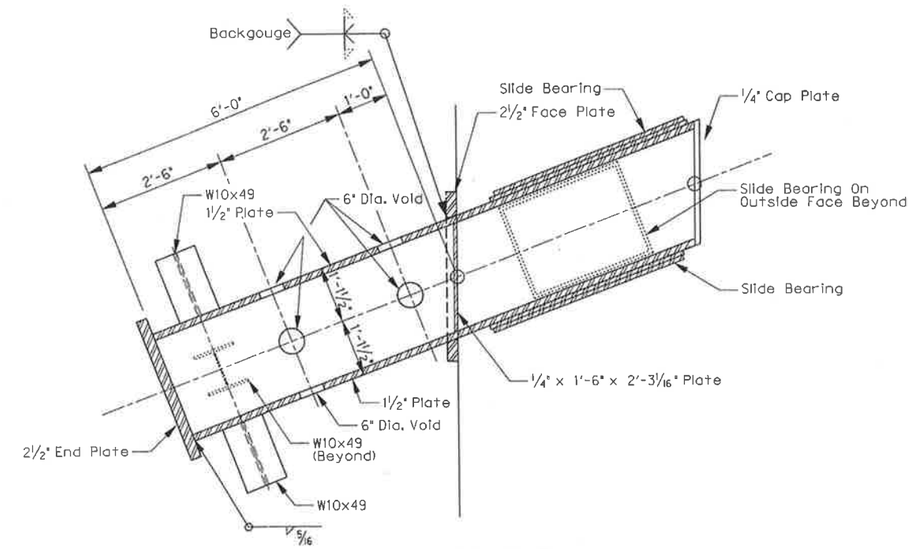


## SECTION B-B

SCALE: ¾" = 1'-0"

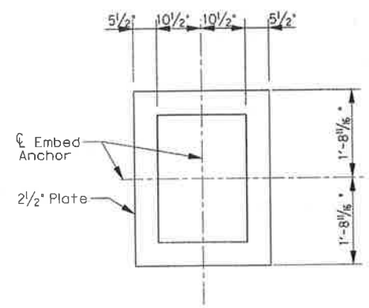


## FACE PLATE

SCALE: N.T.S.

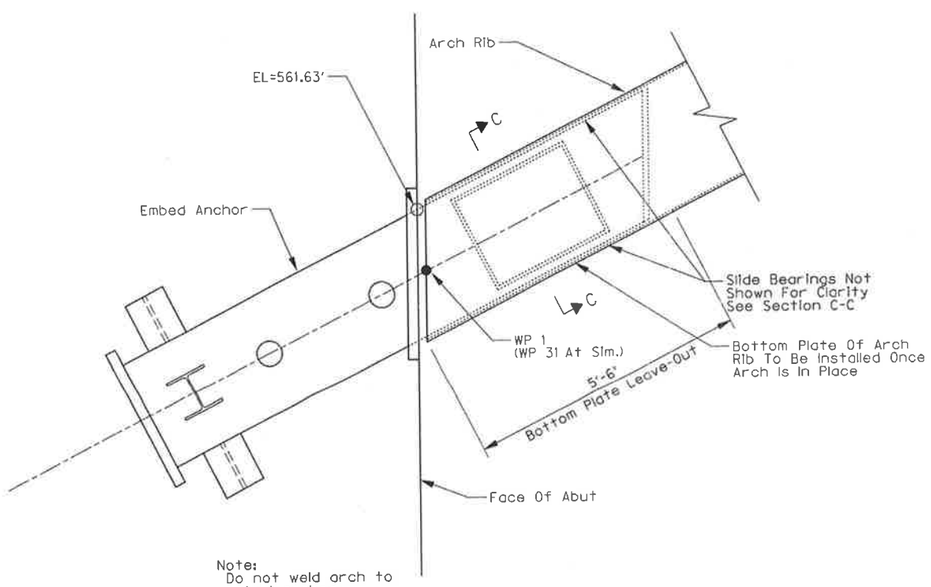


Note:
Do not weld arch to embed anchor.

## ARCH / EMBED ANCHOR CONNECTION

SCALE: ¾" = 1'-0"

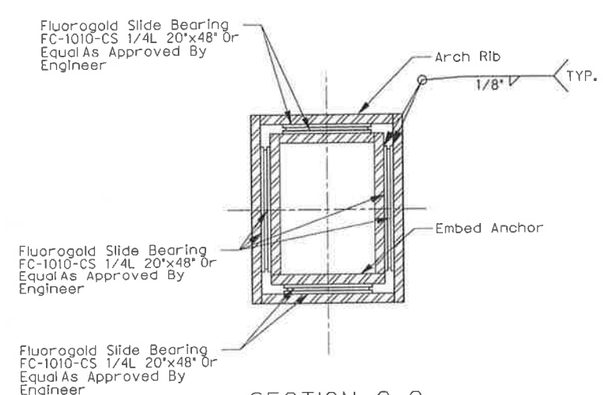


## SECTION C-C

SCALE: N.T.S.

04-29-10

THE SEAL APPEARING ON THIS DOCUMENT WAS AUTHORIZED BY ERIC S. CHRISTIANSEN, P.E.#85412 ON 04-29-2010. ALTERATION OF A SEALED DOCUMENT WITHOUT PROPER NOTIFICATION TO THE RESPONSIBLE ENGINEER IS AN OFFENSE UNDER THE TEXAS ENGINEERING PRACTICE ACT. THE RECORD COPY OF THIS DRAWING IS ON FILE AT THE OFFICES OF HALFF ASSOCIATES, 1201 NORTH BOWSER ROAD, RICHARDSON, TEXAS, 75081. TBPE FIRM #F-312.

| NO. | REVISION | BY | DATE |
|---|---|---|---|
| | | | |

TOWN OF ADDISON
DALLAS COUNTY, TEXAS

VITRUVIAN PARK BRIDGES
BELLA LANE

# EMBED DETAILS

HALFF
1201 NORTH BOWSER ROAD, RICHARDSON, TEXAS 75081-2275
TEL (214) 346-6200 FAX (214) 730-0095

| PROJECT | DESIGN | DRAWN | DATE | FILE | SHEET |
|---|---|---|---|---|---|
| 27379 | ESC | AHH | APRIL 2010 | - | S2-19 |