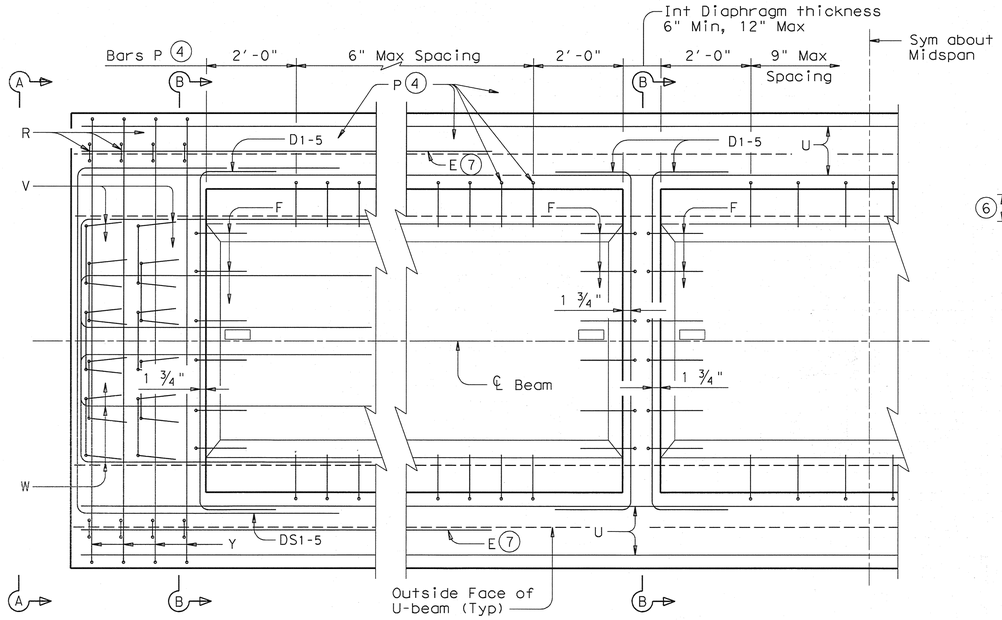

SHOWING SQUARE END

SHOWING INTERIOR DIAPHRAGM

PLAN

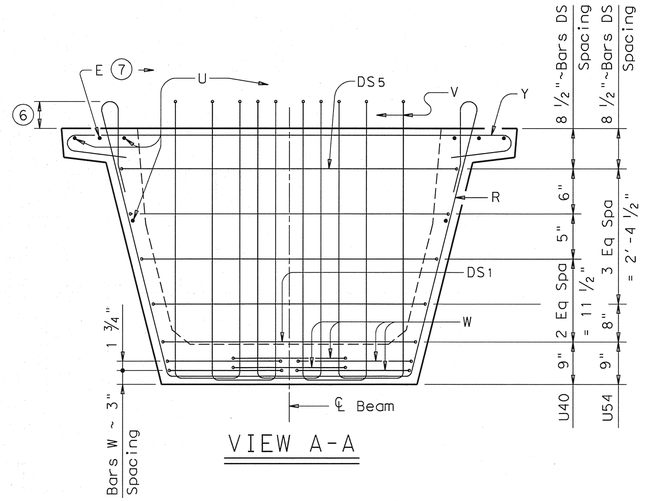

VIEW A-A

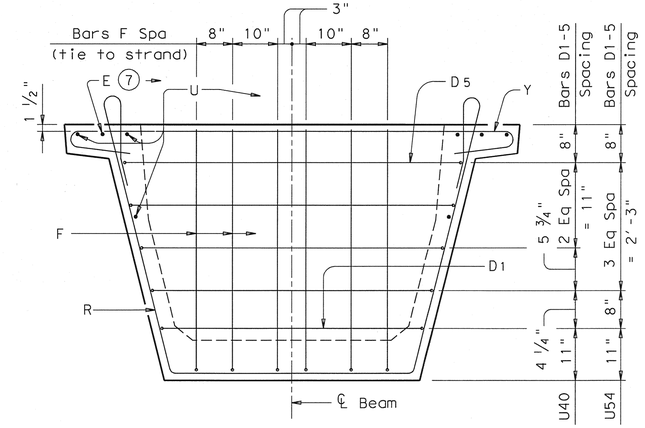

SECTION B-B

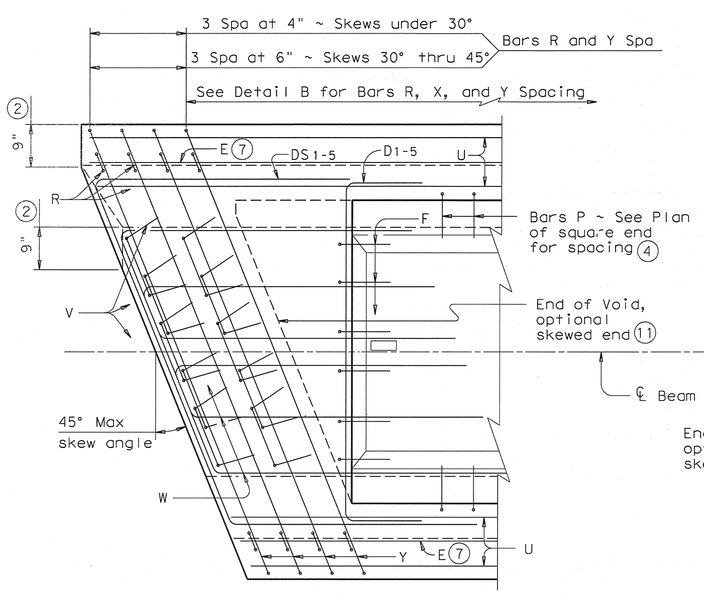

PLAN ~ SKEWED END

(Skews thru 45°)

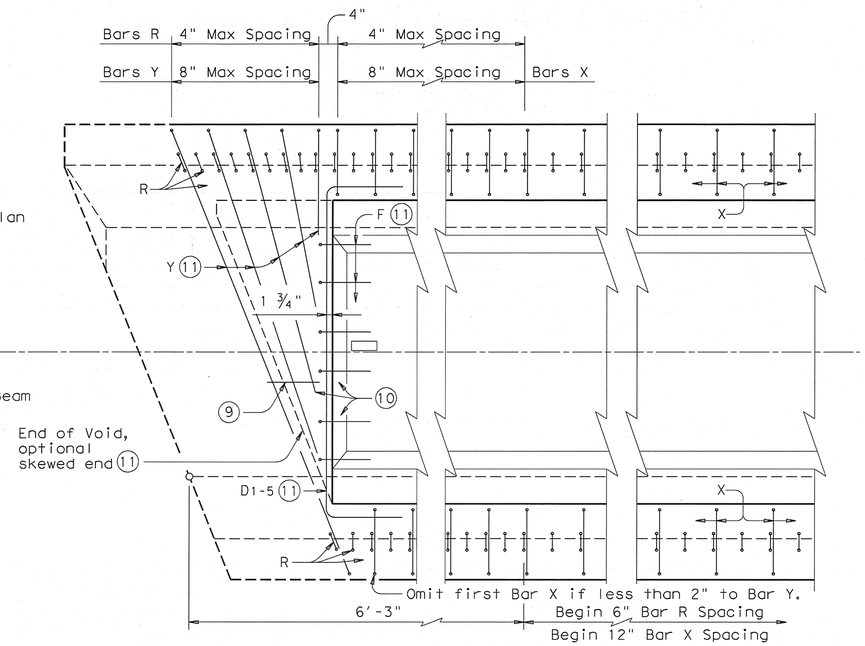

DETAIL B

(Bars DS, E, P, U, V and W
not shown for clarity)

(2) For skews greater than 15 degrees, breakback both top and bottom flanges 9" as shown. Provide a smooth transition between top and bottom flange breakbacks. Adjust reinforcement as necessary to maintain minimum clear cover.

(4) Required for beams that will support cantilevered slab overhang formwork and exterior beams only.

(6) 5 1/2" for normal Bars R.
5 1/2" - 6 1/2" Max for Bars R at skewed beam ends.

(7) Provide Bars E (#5 x 15'-0") at beam ends.

(9) Add support bars for Bars Y as necessary.

(10) Cut Bars Y and Bars R as necessary to provide 2" clear between adjacent bars.

(11) When fabricating beams using the optional skewed end, replace Bars Y that are shown to be cut with Bars X, adjust location of Bars F, and adjust Bars D1-5 in shape and location. Shop drawings must show details used.

HL93 LOADING

SHEET 2 OF 3

Texas Department of Transportation
Bridge Division

PRESTRESSED CONCRETE U-BEAM DETAILS

UBD

FILE: ubstde01.dgn	DN: TxDOT	CK: TxDOT	DW: TxDOT	CK: TxDOT
© TxDOT July 2006	DISTRICT	FEDERAL AID PROJECT		SHEET
REVISIONS				S4-20
	COUNTY	CONTROL	SECT	JOB	HIGHWAY

DISCLAIMER:
The use of this standard is governed by the "Texas Engineering Practice Act". No warranty of any kind is made by TxDOT for any purpose whatsoever. TxDOT assumes no responsibility for the conversion of this standard to other formats or for incorrect results or damages resulting from its use.

PATH:

LEVELS DISPLAYED