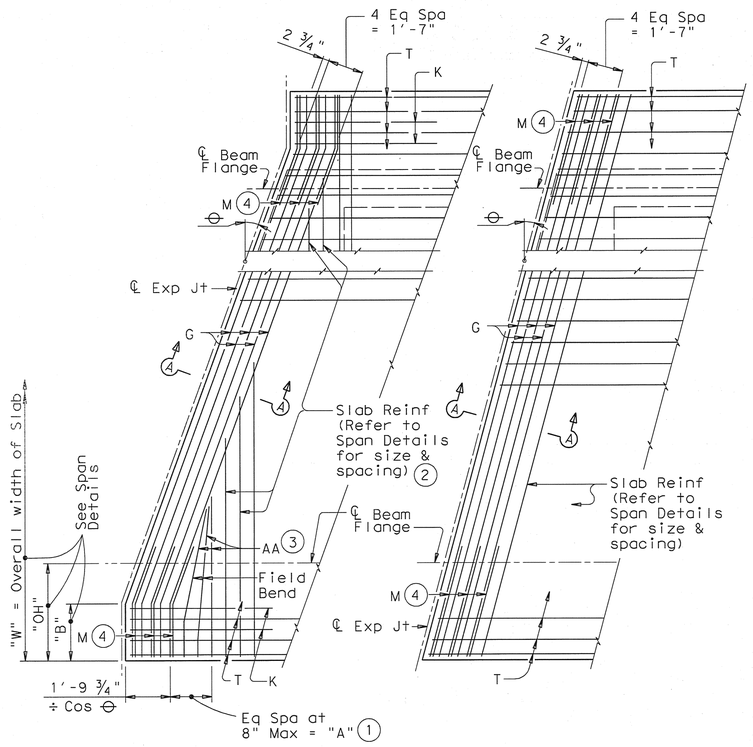

PARTIAL PLAN

(Showing top reinforcing steel only unless noted otherwise)

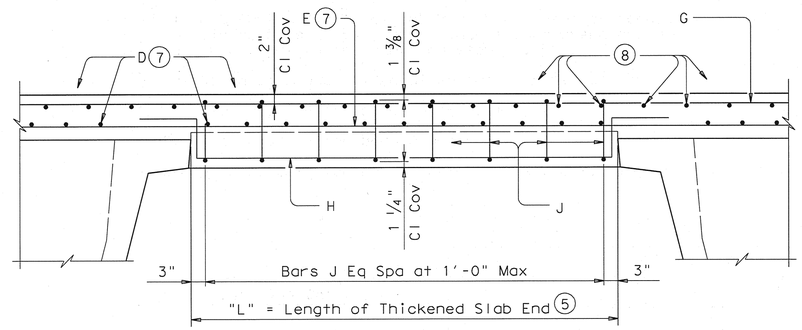

TYPICAL TRANSVERSE SECTION

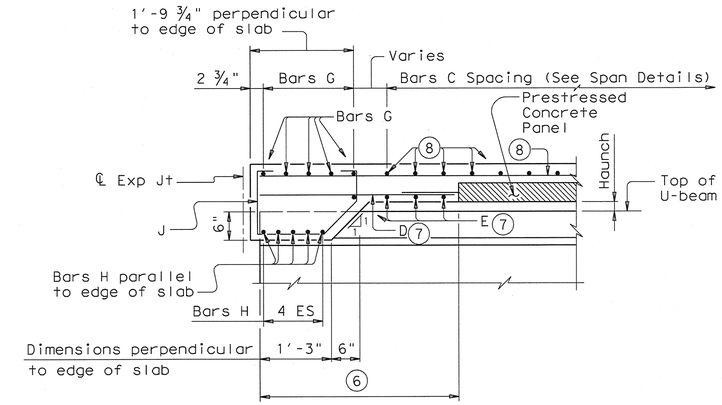

SECTION A-A

(1) "A"= ("OH" + 2.125' + $\frac{0.052'}{\text{Sin } ⊖}$ -"B") x Tan ⊖

(2) End the top transverse reinforcement steel at inside Bar G. End the bottom transverse reinforcement steel 1'-0" beyond inside Bar G.

(3) Bars AA (Top & Bott)

(4) Place 3 Bars M (Bott) at 10" Max. Field bend as necessary. Substitute Bars Z1 for Bars M when sloped overhangs are required. Bars Z1 are shown on standard PCP.

(5) Thickened slab end not required for lengths less than 1'-6".

(6) See standard PCP for panel placement.

(7) See standard PCP for Bars D and E.

(8) See Span Details for reinforcement size and spacing.

GENERAL NOTES:

Designed according to AASHTO LRFD Specifications.

These details are to be used in conjunction with the Span Details and Standard PCP (if prestressed concrete panels are used).

All reinforcing bars must be Grade 60 steel.

Unless otherwise shown or noted hereon, all Span Details remain unchanged.

If slab reinforcing steel is shown on the Span Details to be epoxy coated, then Bars AA, G, K, H, J and M must be epoxy coated.

Bar laps, where required, will be as follows:

Uncoated ~ #4 = 1'-5"
~ #5 = 1'-9"
Epoxy Coated ~ #4 = 2'-1"
~ #5 = 2'-7"

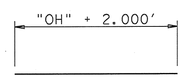

BARS AA (#5)

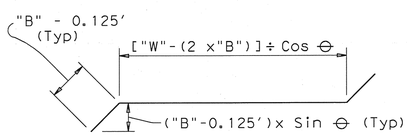

BARS G (#5)
(For Slabs With Breakbacks)

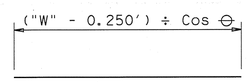

BARS G (#5)
(For Slabs Without Breakbacks)

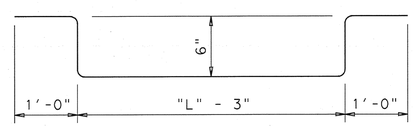

BARS H (#6)

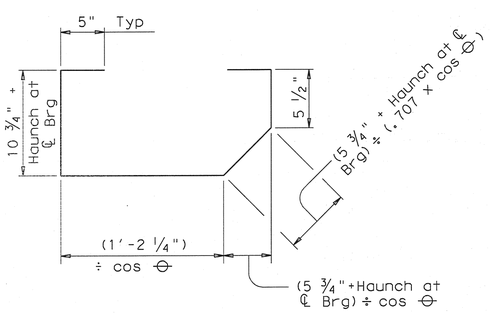

BARS J (#5)

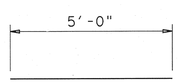

BARS K (#5)

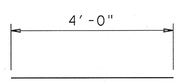

BARS M (#5)

HL93 LOADING

Texas Department of Transportation
Bridge Division

THICKENED SLAB END DETAILS

PRESTR CONC U-BEAM SPANS

UBTS

FILE: ubstde05.dgn	DN: TxDOT	CK: TxDOT	DW: TxDOT	CK: TxDOT
© TxDOT July 2006	DISTRICT	FEDERAL AID PROJECT		SHEET
REVISIONS				S4-24
	COUNTY	CONTROL	SECT	JOB	HIGHWAY

DISCLAIMER:
The use of this standard is governed by the "Texas Engineering Practice Act". No warranty of any kind is made by TxDOT for any purpose whatsoever. TxDOT assumes no responsibility for the conversion of this standard to other formats or for incorrect results or damages resulting from its use.

PATH:

LEVELS DISPLAYED