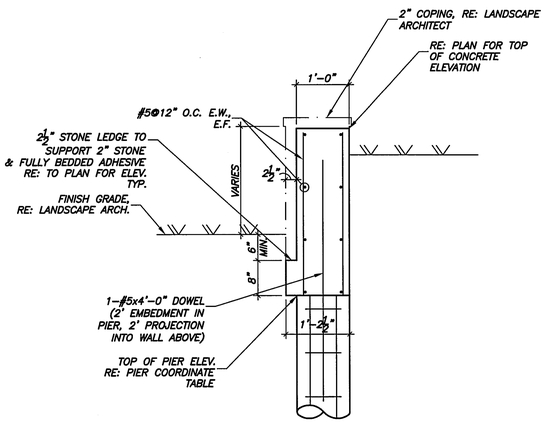

01 TYPICAL PLANTER WALL SECTION
3/4"=1'-0"

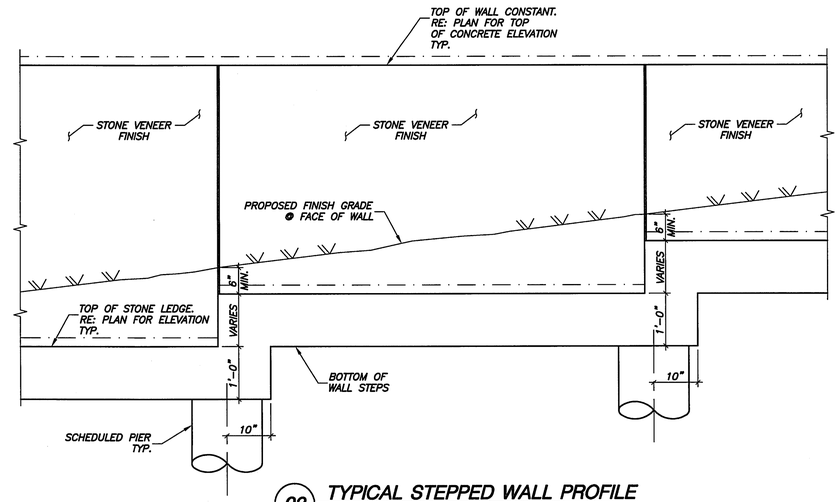

02 TYPICAL STEPPED WALL PROFILE
3/4"=1'-0"

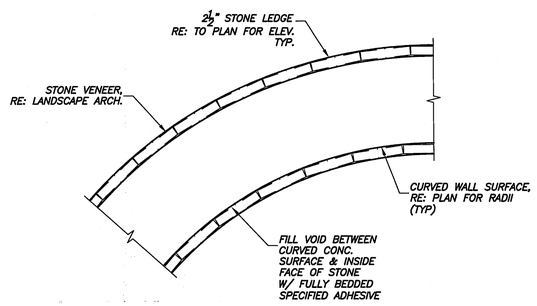

03 TYPICAL DETAIL
3/4"=1'-0"

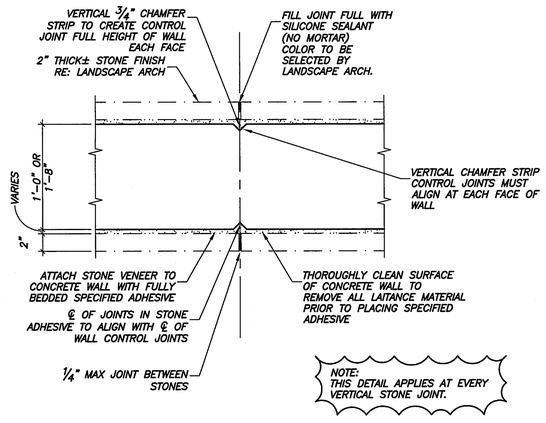

04 TYPICAL CONTROL JOINT DETAIL
1 1/2"=1'-0"

RE-ISSUED FOR CONSTRUCTION: 09/15/10

STATE OF TEXAS
VICTOR LISSIAK, JR.
30565
LICENSED PROFESSIONAL ENGINEER
09/15/10

TEXAS FIRM REG. # F-2658

SECTIONS

VITRUVIAN MONUMENT SIGN

ADDISON, TEXAS

VIEWTECH, INC.
4205 BELTWAY DR. ADDISON, TX. 75001 (972) 661-8187 FAX (972) 661-8172

DESIGN	DRAWN	DATE	SCALE	JOB #	SHEET
VL	RS	09/15/10	1 1/2"=1'	2010-125	S4.1