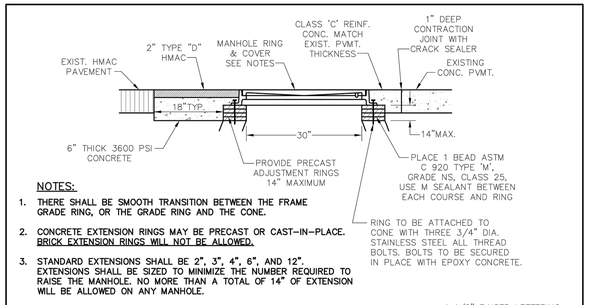

NOTES:

1. THERE SHALL BE SMOOTH TRANSITION BETWEEN THE FRAME GRADE RING, OR THE GRADE RING AND THE CONE.
2. CONCRETE EXTENSION RINGS MAY BE PRECAST OR CAST-IN-PLACE. BRICK EXTENSION RINGS WILL NOT BE ALLOWED.
3. STANDARD EXTENSIONS SHALL BE 2", 3", 4", 6", AND 12". EXTENSIONS SHALL BE SIZED TO MINIMIZE THE NUMBER REQUIRED TO RAISE THE MANHOLE. NO MORE THAN A TOTAL OF 14" OF EXTENSION WILL BE ALLOWED ON ANY MANHOLE.

NOTE:

- CONTRACTOR SHALL PURCHASE CURRENT STYLE LIDS FROM THE TOWN OF ADDISON.

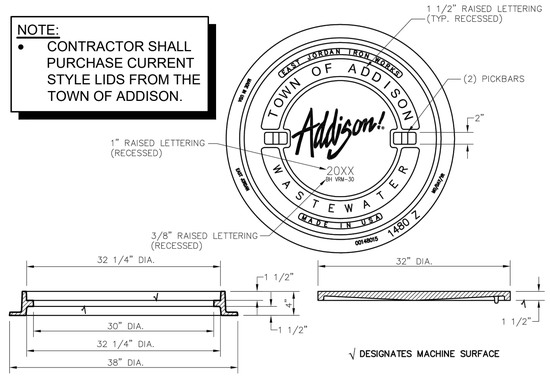

√ DESIGNATES MACHINE SURFACE

Addison! PUBLIC WORKS DEPARTMENT	CAST IRON MANHOLE FRAME AND COVER	STANDARD CONSTRUCTION DETAILS WASTEWATER		
		DATE: AUGUST, 2010	REV DATE: –	SHEET : SD–WW11

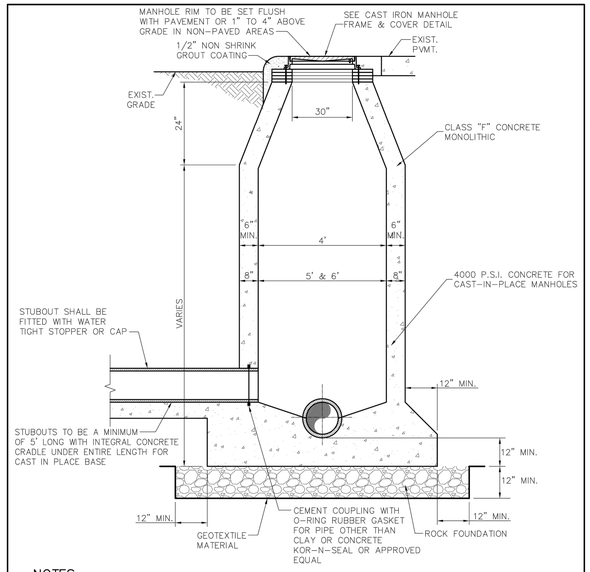

NOTES:

1. IF FALSE MANHOLE BOTTOMS ARE REQUIRED, THEY SHALL BE CONSTRUCTED, INSTALLED, AND REMOVED PER WASTEWATER MANHOLE FALSE BOTTOM STD. DETAIL.
2. WHERE MANHOLE'S ARE OUTSIDE OF PAVEMENT, FRAME & COVER SHALL BE CENTERED IN 5'x5' CONCRETE PAD CLASS 'A' CONCRETE, 4" THICK
3. ALL MANHOLES SHALL PASS VACUUM TEST AS PER NCTCOG SPECIFICATIONS

CAST-IN-PLACE NOTES:

1. KEYWAYS REQUIRED FOR ALL CONSTRUCTION JOINTS.
2. P.V.C. WATER STOP REQUIRED FOR ALL JOINTS IN LOWER 4'-0" OF MANHOLES
3. CONCRETE SHALL BE 4000 P.S.I.

Addison! PUBLIC WORKS DEPARTMENT	CAST-IN-PLACE MANHOLE	STANDARD CONSTRUCTION DETAILS WASTEWATER		
		DATE: AUGUST, 2010	REV DATE: –	SHEET : SD–WW04

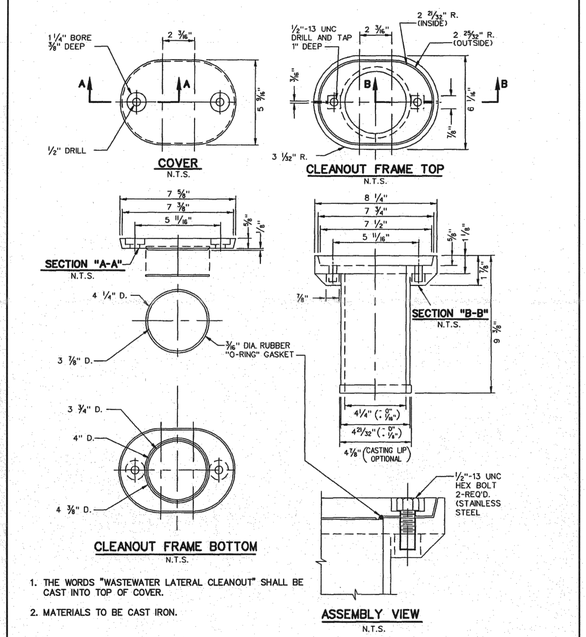

1. THE WORDS "WASTEWATER LATERAL CLEANOUT" SHALL BE CAST INTO TOP OF COVER.
2. MATERIALS TO BE CAST IRON.

Addison! PUBLIC WORKS DEPARTMENT	CAST IRON CLEANOUT FRAME & COVER	STANDARD CONSTRUCTION DETAILS WASTEWATER		
		DATE: AUGUST, 2010	REV DATE: –	SHEET : SD–WW03

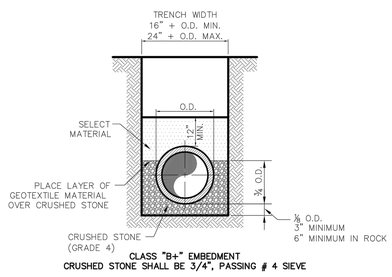

CLASS "B+" EMBEDMENT
CRUSHED STONE SHALL BE 3/4", PASSING # 4 SIEVE

TYPICAL P.V.C. WASTEWATER MAIN EMBEDMENT

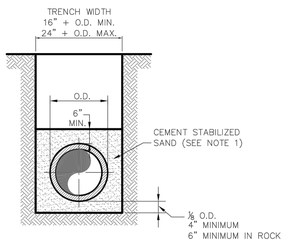

NOTE:

1. CEMENT STABILIZED SAND SHALL HAVE A MINIMUM OF 10% CEMENT PER CUBIC YARD OF CEMENT STABILIZED SAND MIXTURE, BASED ON LOOSE DRY WEIGHT VOLUME (AT LEAST 2.5 BAGS OF CEMENT PER CUBIC YARD OF MIXTURE). THE USE OF BROWN COLORING IN CEMENT STABILIZED SAND IS REQUIRED FOR PRESSURE RATED WASTEWATER MAIN AND LATERAL BEDDING.

P.V.C. WASTEWATER MAIN CEMENT STABILIZED SAND EMBEDMENT

Addison! PUBLIC WORKS DEPARTMENT	P.V.C. WASTEWATER MAIN EMBEDMENT	STANDARD CONSTRUCTION DETAILS WASTEWATER		
		DATE: AUGUST, 2010	REV DATE: –	SHEET : SD–WW01

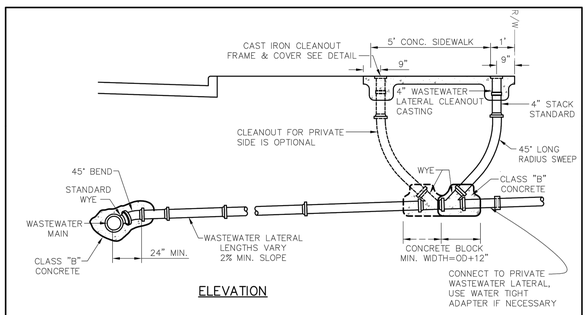

ELEVATION

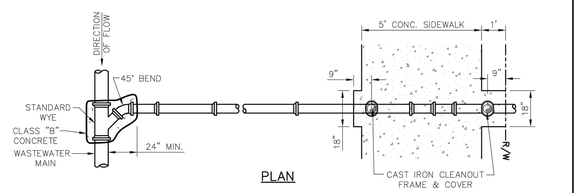

PLAN

NOTES:

1. WASTEWATER LATERALS ARE TO BE CONSTRUCTED TO CLEAR EXISTING AND PROPOSED FACILITIES, SUCH AS STORM DRAIN MAINS, RETAINING WALLS, OTHER UTILITIES, ETC.
2. THE WASTEWATER LATERAL SHALL HAVE MINIMUM COVER OF 4'-0" BELOW THE PROPOSED CURB GRADE AT THE PROPERTY LINE, DETERMINED FROM PAVING GRADE, OR AS REQUIRED TO MAINTAIN A MINIMUM OF 2.0% GRADE, OR AS DIRECTED BY THE OWNER.

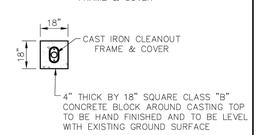

Addison! PUBLIC WORKS DEPARTMENT	TWO-WAY CLEANOUT NEW CONSTRUCTION	STANDARD CONSTRUCTION DETAILS WASTEWATER		
		DATE: AUGUST, 2010	REV DATE: –	SHEET : SD–WW02

Stantec
TBPE # F-6324
TBPLS # 10194229
12222 Merit Drive, Suite 400
Dallas TX
www.stantec.com

The Contractor shall verify and be responsible for all dimensions. DO NOT scale the drawing - any errors or omissions shall be reported to Stantec without delay.
The Copyrights to all designs and drawings are the property of Stantec. Reproduction or use for any purpose other than that authorized by Stantec is forbidden.

Revision	By	Appd.	YY.MM.DD

Issued	By	Appd.	YY.MM.DD

Client/Project
CAWLEY PARTNERS

CAWLEY - FOURTEEN555 PHASE 2
14555 DALLAS PARKWAY
TOWN OF ADDISON, DALLAS COUNTY, TEXAS

Title
TOWN OF ADDISON SANITARY SEWER DETAILS

Permit-Seal

PRELIMINARY
FOR REVIEW ONLY
Not for Construction or Permit Purposes
Stantec
Engineer JOSHUA A. MILLSAP
P.E. No. 100118 Date 02/12/2019

Project Number: 222011532
File Name: 11532_c2_001_ud.dwg

RR	JM	JM	19.02.12
Dwn.	Chkd.	Dsgn.	YY.MM.DD

Drawing No. C5.6
Revision ----
Sheet C5.6

V:\2220\active\222011532\civil\phase_01\drawing\sheets\11532_c2_001_ud.dwg
2019/02/12 3:54 PM By: Rouche, Reid

ORIGINAL SHEET - ANSI D