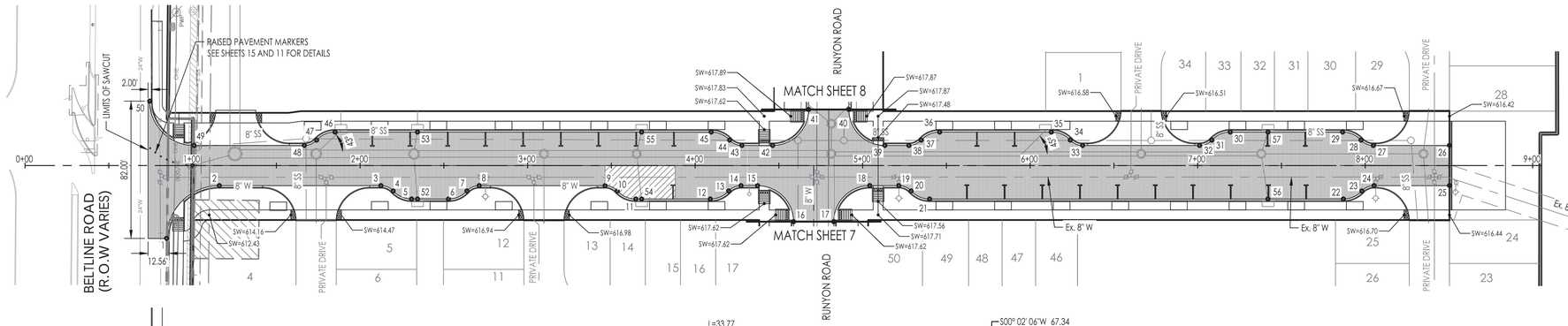


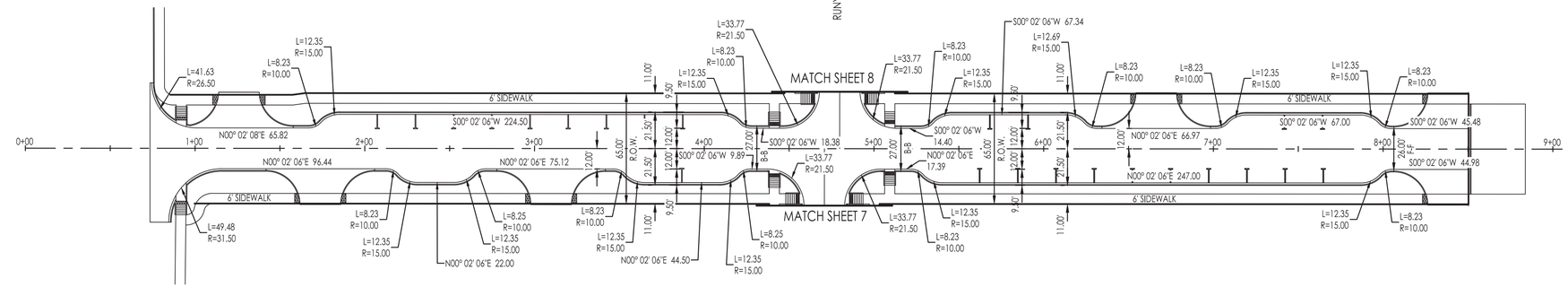


HORIZ. SCALE: 1"=40'
VERT. SCALE: 1"=4'

| Point | Station | Offset (ft) | Side | TP Elevation |
|---|---|---|---|---|
| 1 | 0+84.51 | 43.5 | Rt. | Match Ex. |
| 2 | 1+16.01 | 12.0 | Rt. | 611.78 |
| 3 | 2+12.45 | 12.0 | Rt. | 614.19 |
| 4 | 2+19.78 | 15.2 | Rt. | 614.30 |
| 5 | 2+30.78 | 20.0 | Rt. | 614.45 |
| 6 | 2+52.78 | 20.0 | Rt. | 614.88 |
| 7 | 2+63.78 | 15.2 | Rt. | 615.16 |
| 8 | 2+71.13 | 12.0 | Rt. | 615.33 |
| 9 | 3+46.25 | 12.0 | Rt. | 616.07 |
| 10 | 3+53.58 | 15.2 | Rt. | 616.03 |
| 11 | 3+64.58 | 20.0 | Rt. | 615.97 |
| 12 | 4+09.08 | 20.0 | Rt. | 616.49 |
| 13 | 4+20.08 | 15.2 | Rt. | 616.71 |
| 14 | 4+27.41 | 12.0 | Rt. | 616.85 |
| 15 | 4+37.30 | 12.0 | Rt. | 616.95 |
| 16 | 4+58.80 | 33.5 | Rt. | 616.95 |
| 17 | 4+82.80 | 33.5 | Rt. | 616.95 |
| 18 | 5+04.30 | 12.0 | Rt. | 616.95 |
| 19 | 5+21.69 | 12.0 | Rt. | 616.85 |
| 20 | 5+29.02 | 15.2 | Rt. | 616.74 |
| 21 | 5+40.02 | 20.0 | Rt. | 616.56 |
| 22 | 7+87.02 | 20.0 | Rt. | 615.54 |
| 23 | 7+98.02 | 15.2 | Rt. | 615.69 |
| 24 | 8+05.35 | 12.0 | Rt. | 615.79 |
| 25 | 8+50.33 | 12.0 | Rt. | 615.95 |
| 26 | 8+50.33 | 12.0 | Lt. | 615.95 |
| 27 | 8+04.85 | 12.0 | Lt. | 615.79 |
| 28 | 7+97.51 | 15.2 | Lt. | 615.69 |
| 29 | 7+86.52 | 20.0 | Lt. | 615.53 |
| 30 | 7+19.52 | 20.0 | Lt. | 615.51 |
| 31 | 7+08.52 | 15.2 | Lt. | 615.68 |
| 32 | 7+01.19 | 12.0 | Lt. | 615.80 |
| 33 | 6+31.35 | 12.0 | Lt. | 616.21 |
| 34 | 6+24.02 | 15.2 | Lt. | 616.18 |
| 35 | 6+12.68 | 20.0 | Lt. | 616.13 |
| 36 | 5+46.02 | 20.0 | Lt. | 616.52 |
| 37 | 5+35.02 | 15.2 | Lt. | 616.70 |
| 38 | 5+27.69 | 12.0 | Lt. | 616.82 |
| 39 | 5+13.29 | 12.0 | Lt. | 616.90 |
| 40 | 4+91.79 | 33.5 | Lt. | 617.28 |
| 41 | 4+67.79 | 33.5 | Lt. | 617.28 |
| 42 | 4+46.29 | 12.0 | Lt. | 617.03 |
| 43 | 4+27.91 | 12.0 | Lt. | 616.86 |
| 44 | 4+20.58 | 15.2 | Lt. | 616.71 |
| 45 | 4+09.58 | 20.0 | Lt. | 616.49 |
| 46 | 1+85.08 | 20.0 | Lt. | 613.32 |
| 47 | 1+74.08 | 15.2 | Lt. | 613.16 |
| 48 | 1+66.75 | 12.0 | Lt. | 613.05 |
| 49 | 1+00.93 | 12.0 | Lt. | 611.41 |
| 50 | 0+74.43 | 38.5 | Lt. | Match Ex. |
| 52 | 2+34.28 | 20.0 | Rt. | 614.53 |
| 53 | 2+34.28 | 20.0 | Lt. | 614.53 |
| 54 | 3+68.08 | 20.0 | Rt. | 615.95 |
| 55 | 3+68.08 | 20.0 | Lt. | 616.09 |
| 56 | 7+42.02 | 20.0 | Rt. | 615.35 |
| 57 | 7+42.02 | 20.0 | Lt. | 615.35 |

## PAVING LEGEND

- SANITARY SEWER AND MANHOLE
- SANITARY SEWER AND CLEANOUT
- EXISTING SANITARY SEWER AND MANHOLE
- PROPOSED FIRE HYDRANT ASSEMBLY
- PROPOSED WATERLINE WITH GATE VALVE AND BOX WITH 10' W.L.E.
- EXISTING WATERLINE WITH GATE VALVE AND BOX
- PROPOSED STORM SEWER WITH MANHOLE AND INLETS
- PROPOSED PRIVATE STORM SEWER
- EXISTING STORM SEWER AND MANHOLE
- EXISTING INLET
- PROPOSED TREE WELL
- 2'x6' TRUNCATED DOME PANEL
- LIMITS OF PARABOLIC PAVEMENT CROWN
- AREA OF NON-STANDARD PARABOLIC PAVEMENT CROWN

ONE-CALL NOTIFICATION SYSTEM
CALL BEFORE YOU DIG
1-800-545-6005
OR OTHER UTILITY LOCATING SERVICES AT LEAST 48 HOURS PRIOR TO CONSTRUCTION ACTIVITIES.

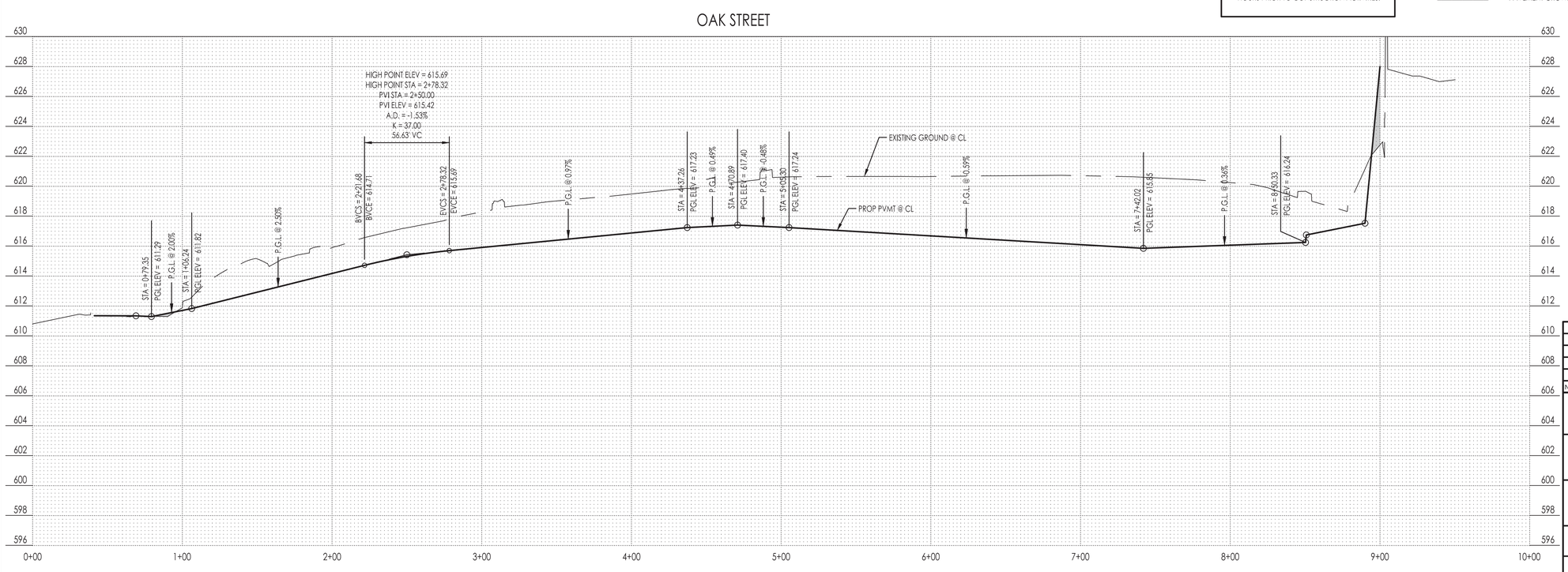


STATE OF TEXAS
CARMEN D. PEARSON
95885
LICENSED
PROFESSIONAL ENGINEER
2017/12/19

SAWYER ENGINEERING, LLC
TBPE FIRM NUMBER F-9171

| NO. | REVISION | BY | DATE |
|---|---|---|---|
| | | | |

**TOWN OF ADDISON**
**DALLAS COUNTY, TEXAS**

IMPROVEMENT PLANS
ADDISON GROVE

PAVING PLAN & PROFILE -
OAK STREET

SAWYER ENGINEERING, LLC
TBPE: F-9171
1520 OLIVER STREET
HOUSTON, TEXAS 77007
(832) 553-5948

| PROJECT | DESIGN | DRAWN | DATE | FILE | SHEET |
|---|---|---|---|---|---|
| | CDP | JDS | MAY 2017 | | 6 |