# TOWN OF ADDISON, TEXAS
# SURVEYOR 1.5 MG
# ELEVATED STORAGE TANK
## PW #2008-02

### MAYOR
JOE CHOW

### CITY COUNCIL
DON R. DASEKE, MAYOR PRO TEMPORE
BLAKE W. CLEMENS, DEPUTY MAYOR PRO TEMPORE
KIMBERLY LAY
ROGER S. MELLOW
BIANCA R. NOBLE
NEIL RESNIK

### CITY MANAGER
RON WHITEHEAD

### DIRECTOR OF PUBLIC WORKS
NANCY S. CLINE, P.E.

SPECIAL INSPECTOR REQUIRED FOR ALL STRUCTURAL ELEMENTS. THE ENGINEER SHALL SUBMIT A LETTER STATING THE STRUCTURE WAS CONSTRUCTED PER THE 2006 IBC AND IS SAFE FOR OCCUPANCY.

SPECIAL INSPECTOR REQUIRED FOR WIND TURBINE INSTALLATION.

UPON COMPLETION OF THE PROJECT THE ARCHITECT SHALL SUBMIT A LETTER STATING THAT THE BUILDING AND SITE MEET THE ACCESSIBILITY REQUIREMENTS OF THE 2006 IBC.

ALL CONSTRUCTION SHALL COMPLY WITH 2006 IECC. THIRD PARTY PLAN REVIEW AND THIRD PARTY INSPECTOR REQUIRED FOR ALL ENERGY CODE PLAN REVIEWS AND INSPECTIONS.

PLUMBING NOTES:
All plumbing shall conform to the 2006 International Plumbing Code. Field inspections will prevail in error at plan review.

FREESE AND NICHOLS, INC.
TEXAS REGISTERED ENGINEERING
FIRM F-2144

STATE OF TEXAS
RONALD G. KING
81073
LICENSED
PROFESSIONAL ENGINEER
1-19-11

FIRE DEPARTMENT
ADD / RELOCATE FIRE SPRINKLERS AND FIRE ALARM DEVICES AS NECESSARY TO PROVIDE PROPER COVERAGE.
FIRE ALARM SHALL BE AUDIBLE THROUGHOUT WITH VISUAL NOTIFICATION PROVIDED IN PUBLIC & COMMON AREAS.

SEPARATE PLAN SUBMITTALS ARE REQUIRED FOR INSTALLATION OR MODIFICATION OF FIRE SPRINKLER, FIRE ALARM OR ACCESS CONTROL SYSTEMS.
Submit plans to the Addison Fire Department
4798 Airport Parkway
Addison TX 75001
972-450-7201

PROJECT LOCATION

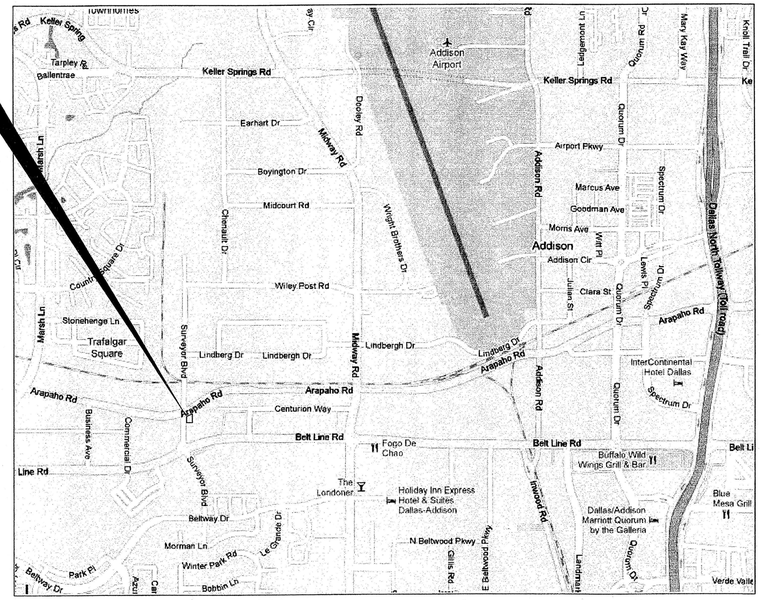


VICINITY MAP
N.T.S.

All responsibility for the adequacy of these plans remains with the Engineer who prepared them. In approving these plans, the Town of Addison makes no representation of adequacy of the work of the Design Engineer.

APPROVED FOR CONSTRUCTION
Town of Addison
Public Works Department
APPROVED BY: CLAY BARNETT
DATE: 3-1-2011


FREESE AND NICHOLS
2220 San Jacinto Blvd., Suite 330
Denton, Tx. 76205
Phone - (940) 387-4600
Fax - (940) 387-4677
Web - www.freese.com


ADD08459
JANUARY 2011

### INDEX OF DRAWINGS

| SHT NO. | DESCRIPTION |
|---|---|
| **CIVIL** | |
| | COVER SHEET |
| G-1 | FINAL PLAT |
| G-2 | GENERAL NOTES |
| C-1 | SITE PLAN |
| C-2 | DIMENSIONAL CONTROL PLAN |
| C-3 | GRADING & EROSION CONTROL PLAN |
| C-4 | DRAINAGE AREA MAP |
| C-5 | UTILITY PLAN |
| C-6 | STORM DRAIN PLAN & PROFILE STA. 1+00 TO 1+97.05 |
| C-7 | 24" WATER LINE PLAN & PROFILE |
| C-8 | 16" WATER LINE PLAN & PROFILE |
| DT-01 | TANK PLAN & ELEVATION |
| DT-02 | TANK BOWL DETAIL |
| DT-03 | TANK DETAILS |
| DT-04 | FLOW CONTROL VALVE VAULT PLAN & SECTION |
| DT-05 | UTILITY DETAILS |
| DT-06 | SITE FEATURE PLANS & DETAILS |
| DT-07 | EROSION CONTROL DETAILS |
| DT-08 | PAVING DETAILS |
| DT-09 | PAVEMENT MARKING & SIGNAGE DETAILS |
| ST-01 | STRUCTURAL DETAILS |
| AT-01 | EXTERIOR ELEVATIONS AND DETAILS |
| **ARCHITECTURAL - PEDESTAL LEARNING CENTER** | |
| A-100 | ACCESSIBILITY |
| A-201 | LEVEL 1 - FLOOR PLAN |
| A-202 | FRAMING PLAN |
| A-210 | LEVEL 1 - FINISH FLOOR PLAN |
| A-301 | DOOR SCHEDULES & DETAILS |
| A-351 | PLAN DETAILS |
| A-501 | WALL SECTIONS |
| A-701 | INTERIOR ELEVATIONS |
| A-801 | LEVEL 1 - R.C. PLAN |
| **M.E.P. - PEDESTAL LEARNING CENTER** | |
| MEP-1 | SYMBOLS & ABBREVIATIONS |
| M-1 | FLOOR PLAN - MECHANICAL |
| M-2 | MECHANICAL SCHEDULE |
| EP-1 | FLOOR PLAN - LIGHTING |
| EP-2 | FLOOR PLAN - POWER |
| EP-3 | ELECTRICAL RISER DIAGRAM |
| P-1 | FLOOR PLAN - PLUMBING |
| **ELECTRICAL** | |
| E-1 | LEGEND |
| E-2 | SITE PLAN |
| E-3 | ELEVATED STORAGE TANK CLASSROOM POWER PLAN |
| E-4 | TANK ELEVATION & FLOW CONTROL VALVE VAULT |
| E-5 | ONE-LINE DIAGRAM |
| E-6 | TURBINE INTERCONNECTION DIAGRAM |
| E-7 | SCHEMATIC, DIAGRAM & SCHEDULE |
| E-8 | DETAILS |
| E-9 | DETAILS |
| E-10 | DETAILS |
| E-11 | DETAIL & LOOP DIAGRAM |
| **IRRIGATION** | |
| IR-1 | IRRIGATION PLAN |
| IR-2 | IRRIGATION SPECIFICATIONS |
| IR-3 | IRRIGATION DETAILS |


MicroStation V8 User: amr Office: Denton
ADD08459 N:\IF\Drawings\GN-ALL-COVER.SHT
Plot Scale: 1.0000 -/" D:\Denton\TAX7\Addison\ Model: Default
Date: 01\20\2011 - 08:38:07 AM Project: Freese and Nichols, Inc. 34Border.dgn

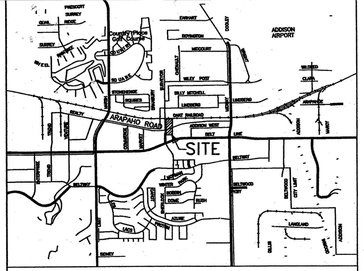


| AREA TABLE |
|---|
| LOT 1,= 1.143 ACRES / 49,771 SQ.FT. |
| LOT 2,= 1.269 ACRES / 55,286 SQ.FT. |
| R.O.W.= 0.491 ACRE / 21,397 SQ.FT. |
| TOTAL= 2.903 ACRES / 126,454 SQ.FT. |

NORTH

SCALE 1" = 50

0 50 100 150

**OWNER**

TOWN OF ADDISON
5300 BELT LINE ROAD
DALLAS, TEXAS, 75254-7606
PFONE: 972-450-7001

**ENGINEER**

FREESE & NICHOLS, INC.
2220 SAN JACINTO BLVD. SUITE 330
DENTON, TEXAS, 76205
PHONE: 940-220-4352
FAX: 940-387-4677

**SURVEY**

BRITTAIN & CRAWFORD, LLC
3908 SOUTH FREEWAY
FORT WORTH, TEXAS, 76110
PHONE: 817-926-0211
FAX: 817-926-9347

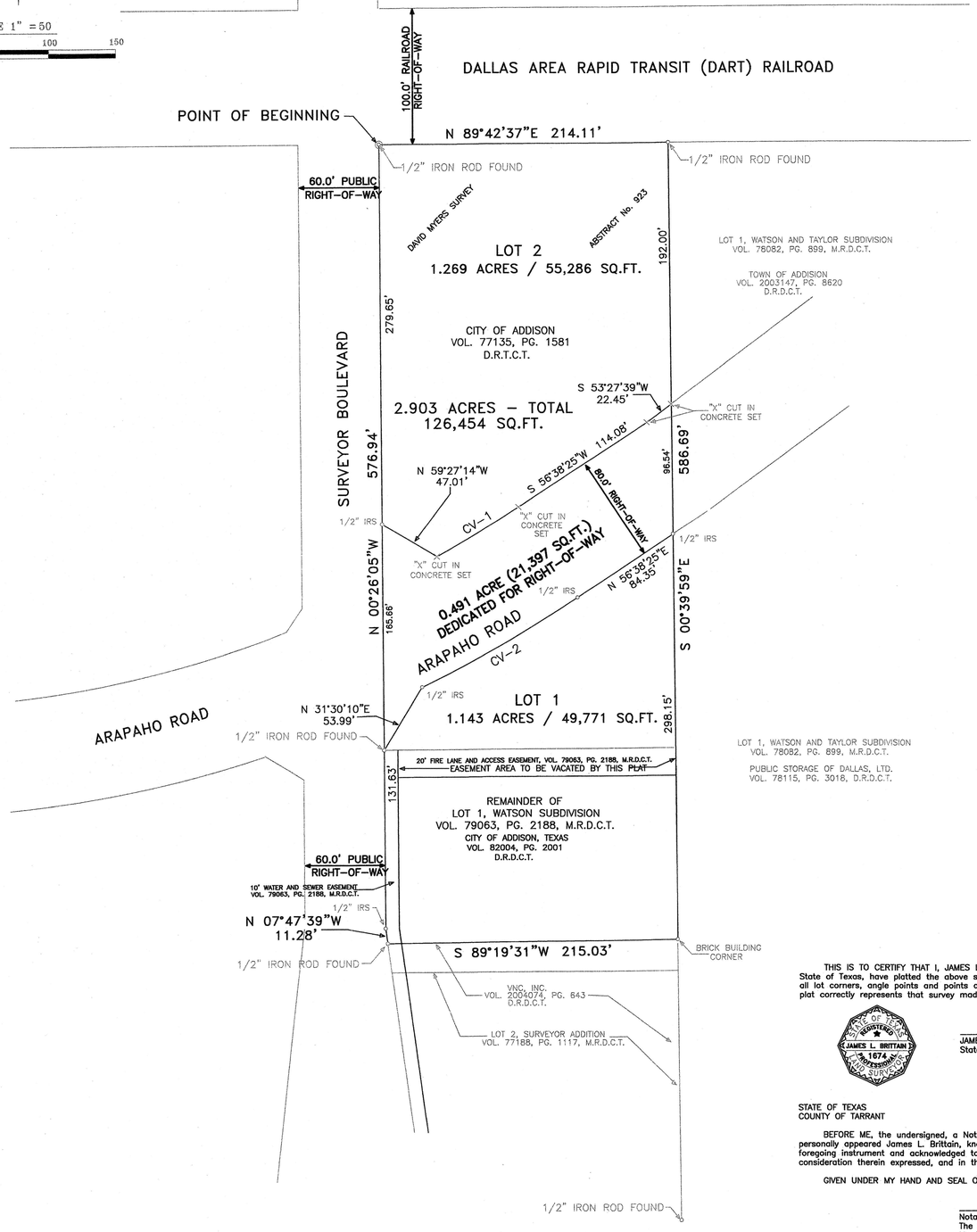


| CURVE DATA TABLE | | | | |
|---|---|---|---|---|
| No. | DELTA | RADIUS | ARC | LONG CHORD |
| 1 | 04°23'51" | 920.00' | 70.61' | S 58°50'21"W 70.60' |
| 2 | 07°36'29" | 1000.00' | 132.78' | N 60°26'40"E 132.69 |

1/2" IRS= 1/2" IRON ROD SET, WITH CAP STAMPED "BRITTAIN & CRAWFORD"

OWNER'S DEDICATION CERTIFICATE
STATE OF TEXAS
COUNTY OF DALLAS

WHEREAS, TOWN OF ADDISON, acting by and through the undersigned their duly authorized representative, is the sole owner of a tract of land situated in Lot 1, Watson Subdivision, to the Town of Addison, by the Plat recorded in Volume 79063, Page 2188, of the Map Records of Dallas County, Texas, and being in the DAVID MYERS SURVEY, Abstract No. 923, Dallas County, Texas, according to the deeds recorded in Volume 77135, Page 1581, and Volume 82004, Page 2001 of the Deed Records of Dallas County, Texas, and more particularly described as follows:

BEING 2.903 acres of land located in Lot 1, WATSON SUBDIVISION, to the Town of Addison, by the plat recorded in Volume 79063, Page 2188, of the Map Records of Dallas County, Texas, and being in the DAVID MYERS SURVEY, Abstract No. 923, Tarrant County, Texas, and being the Tracts of land conveyed to the City of Addison, by the deeds recorded in Volume 77135, Page 1581, and Volume 82004, Page 2001, of the Deed Records of Dallas County, Texas. Said 2.903 acres of land being more particularly described by metes and bounds as follows:

BEGINNING at a 1/2" iron rod found at the Northwest corner of City of Addison Tract, recorded in Volume 77135, Page 1581, and lying at the intersection of the East right-of-way line of Surveyor Boulevard (a 60.0 foot public right-of-way) with the South right-of-way line of the Dallas Area Rapid Transit (Dart) Railroad (a 100.0 foot Railroad right-of-way);

THENCE N 89° 42' 37" E 214.11 feet, along the North boundary line of said City of Addison Tract, and the South right-of-way line of said Dart Railroad to a 1/2" iron rod found at the Northeast corner of City of Addison Tract, being the Northwest corner of Lot 1, Watson and Taylor Subdivision, an addition to the Town of Addison, according to the plat recorded in Volume 78082, Page 899, of the Map records of Dallas County, Texas;

THENCE S 00° 39' 59" E 586.69 feet, along the East boundary line of said City of Addison Tracts, and along the West boundary line of said Lot 1, Watson and Taylor Subdivision, to a 1/2" iron rod set stamped "Brittain & Crawford", at the Southeast corner of said City of Addison Tract, recorded in Volume 82004, Page 2001, and being the Northeast corner of a Tract of land conveyed to VNV, INC, by the deed recorded in Volume 2004074, Page 643, of the Deed records of Dallas County, Texas;

THENCE S 89° 19' 31" W 215.03 feet, along the South boundary line of said City of Addison Tract, and the North boundary line of said VNC, INC. Tract, to a 1/2" iron rod found, at the Southwest corner said City of Addison Tract, and lying in the East right-of-way line of aforesaid Surveyor Boulevard;

THENCE along the West boundary line of said City of Addison Tracts, and the East right-of-way line of said Surveyor Boulevard, as follows;

1. N 07° 47' 39" W 11.28 feet, to a 1/2" iron rod set, stamped "Brittain and Crawford";
2. N 00° 26' 05" W 576.94, to THE PLACE OF BEGINNING, containing 2.903 acres (126,454 square feet) of land.

NOW, THEREFORE, KNOW ALL MEN BY THESE PRESENTS:

THAT, TOWN OF ADDISON, does hereby adopt this plat designating the hereinabove described property as Lot 1 and Lot 2, ADDISON WATER STATION ADDITION, to the Town of Addison, Texas, and subject to the conditions, restrictions and reservations states hereinafter, owner dedicates to the public use forever the streets and alleys shown thereon.

The easement shown on this plat are hereby reserved for the purposes as indicated, including, but not limited to, the installation and maintenance of water, sanitary sewer, storm sewer, drainage, electric, telephone, gas and cable television. Owner shall have the right to use these easements, provided, however, that it does not unreasonably interfere or impede with the provision of the services to others. Said utility easements are hereby being reserved by mutual use and accommodation of all public utilities using or desiring to use the same. An express easement of ingress and egress is hereby expressly granted on, over and across all such easements for the benefit of the provider of services for which easements are granted.

Any drainage and floodway easement shown hereon is hereby dedicated to the public's use forever, but including the following covenants with regards to maintenance responsibilities. The existing channels or creeks traversing the drainage and floodway easement will remain as an open channel, unless required to be enclosed by ordinance, at all times and shall be maintained by the individual owners of the lot or lots that are traversed by or adjacent to the drainage and floodway easement. The Town will not be responsible for the maintenance and operation of said creek or creeks or for any damage or injury of private property or persons that result from the flow of water along said creek, or for the control of erosion. No obstruction to the natural flow of water runoff shall be permitted by construction of any type building, fence or any other structure within the drainage and floodway easement. Provided, however, it is understood that in the event it becomes necessary for the town to channelize or consider erecting any type of drainage structure in order to improve the storm drainage, then in such event, the town shall have the right, but not the obligation, to enter upon the drainage and floodway easement at any point, or points, with all rights of ingress and egress to investigate, survey, erect, construct or maintain any drainage facility deemed necessary by the town for maintenance or efficiency of its respective system or services.

Water main and sanitary sewer easements shall also include additional area of working space for construction and maintenance of the systems. Additional easement area is also conveyed for installation and maintenance of manholes, cleanouts, fire hydrants, water service and sewer services from the main curb or pavement line, and the descriptions of such additional easements herein granted shall be determined by their locations as installed.

This plat is approved subject to all platting ordinances, rules, regulations, and resolutions of the Town of Addison, Texas.

WITNESS MY HAND at Addison, Dallas County, Texas, this the _____ day of _____, 2010.

TOWN OF ADDISON

_____
By: Mayor: Joe Chow

APPROVED BY THE TOWN OF ADDISON CITY COUNCIL.
DATE:_____, 2010

_____
BY: City Secretary: Lea Dunn

THIS IS TO CERTIFY THAT I, JAMES L. BRITTAIN, a Registered Professional Land Surveyor of the State of Texas, have platted the above subdivision from an actual survey on the ground, and that all lot corners, angle points and points of curve are properly marked on the ground and that this plat correctly represents that survey made by me.

STATE OF TEXAS
REGISTERED
JAMES L. BRITTAIN
1674
PROFESSIONAL
LAND SURVEYOR

_____
JAMES L. BRITTAIN, R.P.L.S.
State of Texas No. 1674

STATE OF TEXAS
COUNTY OF TARRANT

BEFORE ME, the undersigned, a Notary Public in and for said County and State, on this day personally appeared James L. Brittain, known to me to be the person whose name is subscribed to the foregoing instrument and acknowledged to me that he executed the same for the purposes and consideration therein expressed, and in the capacity therein stated.

GIVEN UNDER MY HAND AND SEAL OF OFFICE, this the _____ day of _____, 2010.

_____
Notary Public in and for
The State of Texas
My Commission Expires:_____

BRITTAIN & CRAWFORD
LAND SURVEYING & TOPOGRAPHIC MAPPING
(817) 926-0211 - METRO (817) 329-5112
FAX No. (817) 926-9347
P.O. BOX 11374 * 3908 SOUTH FREEWAY
FORT WORTH, TEXAS 76110
EMAIL: admin@brittain-crawford.com

# FINAL PLAT
# OF
# LOT 1 AND LOT 2
# ADDISON WATER STATION ADDITION

A REVISION OF THE REMAINDER OF LOT 1, WATSON SUBDIVISION, TO THE TOWN OF ADDISON, DALLAS COUNTY, TEXAS, ACCORDING TO PLAT RECORDED IN VOLUME 79063, PAGE 2188, OF THE MAP RECORDS OF DALLAS COUNTY, TEXAS,
BEING
2.903 ACRES OF LAND
LOCATED IN THE
DAVID MYERS SURVEY
ABSTRACT No. 923
ADDISON, DALLAS COUNTY, TEXAS

DATE PREPARED: APRIL 2, 2009

## GENERAL NOTES

1. ALL EXISTING UTILITIES ARE AS PER AVAILABLE RECORDS. PRIOR TO CONSTRUCTION, EXACT LOCATION OF UTILITIES SHALL BE VERIFIED ON THE GROUND BY THE CONTRACTOR.

2. THE INFORMATION SHOWN ON THESE DRAWINGS CONCERNING TYPE AND LOCATION OF EXISTING UNDERGROUND AND OTHER UTILITIES IS NOT GUARANTEED TO BE ACCURATE OR ALL INCLUSIVE. THE CONTRACTOR IS RESPONSIBLE FOR MAKING HIS OWN DETERMINATIONS AS TO THE TYPE AND LOCATION OF ALL UNDERGROUND AND OTHER UTILITIES AS MAY BE NECESSARY TO AVOID DAMAGE THERETO. THE CONTRACTOR SHALL CONTACT THE FOLLOWING AT LEAST 72 HOURS PRIOR TO EXCAVATION:

   ADDISON PUBLIC WORKS DEPARTMENT 972-450-2871
   ONCOR 972-860-0607
   AT&T
   TIME WARNER
   LINE LOCATE 1-800-DIG-TESS OR TEXAS 811

3. EXISTING IMPROVEMENTS INCLUDING, BUT NOT LIMITED TO FENCES, DRIVEWAYS, SIDEWALKS PAVEMENT, CURBS, UTILITIES PIPELINES, AND DRAINAGE STRUCTURES WHICH ARE DAMAGED, REMOVED OR ALTERED TO PERMIT INSTALLATION OF THE WORK SHALL BE REPAIRED OR REPLACED BY THE CONTRACTOR, AT THE CONTRACTOR'S EXPENSE, IN THE SAME LOCATION AND IN CONDITION AS GOOD AS OR BETTER THAN THEY WERE FOUND.

4. UNLESS SPECIFICALLY STATED ON A DRAWING, THE CONTRACTOR SHALL NOT REMOVE, CUT OR DAMAGE TREES OR LIMBS WITHOUT WRITTEN APPROVAL OF THE TOWN OF ADDISON.

5. THE CONTRACTOR SHALL AVOID DAMAGING ANY EXISTING SPRINKLER SYSTEM THAT MAY BE IN THE CONSTRUCTION AREA AND WILL BE RESPONSIBLE FOR REPAIRS TO ANY HEADS OR LINES DAMAGED. REPLACEMENT, AS NECESSARY, SHALL BE WITH LIKE OR BETTER MATERIAL INSTALLED BY A LICENSED IRRIGATOR, AT THE CONTRACTOR'S EXPENSE.

6. ALL VALVE BOXES SHALL BE SET TO MATCH FINISHED GRADE.

7. THE CONTRACTOR SHALL FURNISH A TRAFFIC CONTROL PLAN, SEALED AND SIGNED BY A REGISTERED PROFESSIONAL ENGINEER, FOR ALL WORKING AREAS, TO THE PUBLIC WORKS DEPARTMENT FOR APPROVAL PRIOR TO THE PRE-CONSTRUCTION MEETING. TWO-WAY TRAFFIC MUST BE MAINTAINED AT ALL TIMES. ONE LANE TRAVEL AROUND CONSTRUCTION OPERATIONS IN PROGRESS WITH ADEQUATE SAFEGUARDS WILL BE ACCEPTABLE ON MINOR STREETS ONLY. ALL BARRICADES, WARNING SIGNS, LIGHT DEVICES, AND ETC., FOR THE GUIDANCE AND PROTECTION OF TRAFFIC AND PEDESTRIANS, MUST CONFORM TO THE INSTALLATION SHOWN IN THE TEXAS MANUAL ON UNIFORM TRAFFIC CONTROL DEVICES (LATEST EDITION), TEXAS DEPARTMENT OF TRANSPORTATION.

8. ALL TRENCH BACKFILL IN UNPAVED AREAS SHALL BE PLACED TO EXISTING GRADE PLUS SIX INCHES TO ALLOW FOR SETTLEMENT. HOWEVER, DRAINAGE SHALL BE MAINTAINED AT ALL TIMES.

9. THE CONTRACTOR SHALL REMOVE FROM THE PROJECT AREA ALL SURPLUS MATERIAL. THIS SHALL BE INCIDENTAL AND NOT A SEPARATE PAY ITEM. SURPLUS MATERIALS FROM EXCAVATION INCLUDING DIRT, TRASH, ETC. SHALL BE PROPERLY DISPOSED OF AT A SITE AS APPLICABLE BY LAW.

10. THE INSPECTION AND MAINTENANCE OF THE EROSION PREVENTION MEASURES SHALL BE THE CONTRACTOR'S RESPONSIBILITY THROUGHOUT ALL PHASES OF CONSTRUCTION. IT SHALL BE THE CONTRACTOR'S RESPONSIBILITY TO COMPLY WITH THE EPA'S NPDES REGULATIONS 40-CFR-122, 123, 124 CONCERNING EROSION AND SEDIMENT CONTROL. THE CONTRACTOR WILL BE RESPONSIBLE FOR PREPARING A STORM WATER POLLUTION PREVENTION PLAN AND SUBMITTING A NOTICE OF INTENT "NOI" TO TCEQ 72 HOURS PRIOR TO BEGINNING CONSTRUCTION AND NOTICE OF TERMINATION "NOT" TO TCEQ UPON COMPLETION OF THE PROJECT.

11. ALL TRENCH EXCAVATION SHALL BE IN ACCORDANCE WITH THE U.S. DEPARTMENT OF LABOR OCCUPATIONAL SAFETY AND HEALTH ADMINISTRATOR'S STANDARDS. CONTRACTOR IS RESPONSIBLE FOR ALL TRENCH SAFETY. THE CONTRACTOR SHALL CONSTRUCT THE PROPOSED WORK UTILIZING A TRENCH SAFETY PLAN, PREPARED BY A PROFESSIONAL ENGINEER FOR THIS PROJECT. A TRENCH SAFETY PLAN SHALL BE SUBMITTED AT THE PRE-CONSTRUCTION MEETING.

12. CONTRACTOR SHALL MAINTAIN SUITABLE CONSTRUCTION ACCESS TO THE ENGINEER AND THE TOWN OF ADDISON AT ALL TIMES DURING CONSTRUCTION.

13. ALL BURIED VALVES, FIRE HYDRANTS, METALLIC PIPING, AND METALLIC EQUIPMENT SHALL BE WRAPPED IN ACCORDANCE WITH THE SPECIFICATIONS.

14. SEWER LINES AND FORCE MAINS SHALL HAVE A MINIMUM COVER OF 42" BELOW FINISHED GRADE, UNLESS OTHERWISE NOTED.

15. CONTRACTOR SHALL INSTALL STANDARD BENDS AT LOCATIONS SHOWN. ALL NON-STANDARD VERTICAL AND HORIZONTAL BENDS SHALL BE INSTALLED USING STANDARD BENDS AND 75% OF THE MAXIMUM ALLOWABLE JOINT DEFLECTIONS AND MINIMUM RADIUS AS RECOMMENDED BY THE PIPE MANUFACTURER.

16. CONTRACTOR SHALL BE RESPONSIBLE FOR KEEPING ALL EXISTING UTILITIES IN SERVICE DURING CONSTRUCTION.

17. THE CONTRACTOR SHALL REMOVE ALL FENCES, LOCATED WITHIN EASEMENTS, INTERFERING WITH CONSTRUCTION OPERATION AND PROVIDE TEMPORARY FENCING DURING CONSTRUCTION. REMOVED FENCES SHALL BE REPLACED WITH A NEW FENCE OR UNDAMAGED ORIGINAL FENCING. ALL AFFECTED PROPERTY OWNERS SHALL BE NOTIFIED PRIOR TO CONSTRUCTION. REMOVAL AND REPLACEMENT OF EXISTING AND TEMPORARY FENCES SHALL BE CONSIDERED SUBSIDIARY TO THE PROJECT COST AND REFLECTED IN THE UNIT BID PRICES FOR VARIOUS ITEMS LISTED IN THE PROPOSAL.

18. CONTRACTOR SHALL PROVIDE CLOSURE PIECES FOR PIPELINE AS REQUIRED TO CONSTRUCT THE BEGINNING WORK ON EACH PROPERTY. THIS LETTER SHALL INCLUDE NAMES AND TELEPHONE NUMBERS OF CONTRACTOR CONTACTS, A DESCRIPTION OF WORK TO BE DONE, AND THE TIME FRAME FOR DOING THE WORK. COPIES OF THE LETTER SHALL BE FORWARDED TO THE CITY INSPECTOR. THE CONTRACTOR SHALL NOTIFY RESIDENTS 48 HOURS IN ADVANCE OF PERFORMING ANY WORK ON PRIVATE PROPERTY. DISTRIBUTION OF LETTERS SHALL BE CONSIDERED AS SUBSIDIARY TO THE COST OF PROJECT AND NO ADDITIONAL COMPENSATION WILL BE ALLOWED.

19. THE CONTRACTOR MAY ELECT TO VIDEO ALL POTENTIALLY IMPACTED PRIVATE PROPERTY AREAS PRIOR TO WORK. VIDEOS SHALL INCLUDE DATE NOTATION AND AUDIO IDENTIFICATION OF PROPERTY ADDRESS AND MAIN/LATERAL NAME. THIS PRE-CONSTRUCTION VIDEO TAPING OF IMPACTED PROPERTIES SHALL BE CONSIDERED SUBSIDIARY WORK.

20. CONTRACTOR IS RESPONSIBLE FOR MAINTAINING WATER AND SEWER CONNECTIONS TO ALL HOMES AND BUSINESSES IN WORKING ORDER AT ALL TIMES, EXCEPT FOR BRIEF INTERRUPTIONS IN SERVICE FOR SEWER SERVICES TO BE REINSTALLED. IN NO CASE SHALL SERVICES BE ALLOWED TO REMAIN OUT OF SERVICE OVERNIGHT.

21. ALL DRIVEWAYS, WHICH ARE OPEN CUT, SHALL HAVE ACCESS PROVIDED AT ALL TIMES. THE TEMPORARY SURFACE WILL BE CONSIDERED A NON-PAY ITEM.

22. THE CONTRACTOR IS RESPONSIBLE FOR KEEPING STREETS AND SIDEWALKS ADJACENT TO PROTECT FREE OF MUD AND DEBRIS FROM THE CONSTRUCTION.

23. THE CONTRACTOR SHALL INSTALL TEMPORARY BACKFILL AS REQUIRED FOR OPEN TRENCH IN ESTABLISHED ROADWAYS. NO OPEN TRENCH WILL BE ALLOWED IN EXISTING PAVEMENT DURING DAYLIGHT HOURS DURING CONSTRUCTION OPERATIONS. TEMPORARY BACK FILL SHALL BE INSTALLED TO THE FINISHED GRADE OF THE EXISTING PAVEMENT AND SHALL BE MAINTAINED BY THE CONTRACTOR TO ENSURE A SMOOTH DRIVING SURFACE FREE OF RUTTING AND POTHOLES. REPAIR DAMAGED PAVEMENT IN ACCORDANCE WITH SPECIFICATIONS.

24. THE CONTRACTOR SHALL COORDINATE WITH THE ELECTRIC UTILITY COMPANY TO PROVIDE SUPPORT OF POWER POLES DURING CONSTRUCTION, AT NO ADDITIONAL COST TO THE OWNER.

### TEXAS COMMISSION ON ENVIROMENTAL QUALITY
### POTABLE WATER STORAGE TANK
### GENERAL CONSTRUCTION NOTES

1. THESE WATER STORAGE FACILITIES MUST BE CONSTRUCTED IN ACCORDANCE WITH THE TEXAS COMMISSION ON ENVIRONMENTAL QUALITY (TCEQ) RULES AND REGULATIONS FOR PUBLIC WATER SYSTEMS 30 TEXAS ADMINISTRATIVE CODE (TAC) CHAPTER 290 SUBCHAPTER D.

2. ALL FACILITIES FOR POTABLE WATER STORAGE SHALL BE COVERED AND DESIGNED, FABRICATED, ERECTED, TESTED AND DISINFECTED IN STRICT ACCORDANCE WITH CURRENT AMERICAN WATER WORKS ASSOCIATION (AWWA) STANDARDS AND SHALL BE PROVIDED WITH THE MINIMUM NUMBER, SIZE AND TYPE OF ROOF VENTS, MAN WAYS, DRAINS, SAMPLE CONNECTIONS, ACCESS LADDERS, OVERFLOWS, LIQUID LEVEL INDICATORS AND OTHER APPURTENANCES AS SPECIFIED IN THESE RULES.

3. ROOF VENTS SHALL BE INSTALLED IN STRICT ACCORDANCE WITH CURRENT AWWA STANDARDS AND SHALL BE EQUIPPED WITH APPROVED SCREENS TO PREVENT ENTRY OF ANIMALS, BIRDS, INSECTS AND HEAVY AIR CONTAMINANTS. SCREENS SHALL BE FABRICATED OF CORROSION-RESISTANT MATERIAL AND SHALL BE 16-MESH OR FINER. SCREENS SHALL BE SECURELY CLAMPED IN PLACE WITH STAINLESS BANDS OR WIRES AND SHALL BE DESIGNED TO WITHSTAND WINDS OF NOT LESS THAN TANK DESIGN CRITERIA (UNLESS SPECIFIED OTHERWISE BY THE ENGINEER).

4. ALL ROOF OPENINGS SHALL BE DESIGNED IN ACCORDANCE WITH CURRENT AWWA STANDARDS. EACH ACCESS OPENING SHALL HAVE A RAISED CURBING AT LEAST FOUR INCHES IN HEIGHT WITH A LOCKABLE COVER THAT OVERLAPS THE CURBING AT LEAST TWO INCHES IN A DOWNWARD DIRECTION. WHERE NECESSARY, A GASKET SHALL BE USED TO MAKE A POSITIVE SEAL WHEN THE HATCH IS CLOSED. ALL HATCHES SHALL REMAIN LOCKED EXCEPT DURING INSPECTIONS AND MAINTENANCE.

5. OVERFLOWS SHALL BE DESIGNED IN STRICT ACCORDANCE WITH CURRENT AWWA STANDARDS AND SHALL TERMINATE WITH A GRAVITY HINGED AND WEIGHTED COVER. THE COVER SHALL FIT TIGHTLY WITH NO GAP OVER 1/16 INCH. IF THE OVERFLOW TERMINATES AT ANY POINT OTHER THAN THE GROUND LEVEL, IT SHALL BE LOCATED NEAR ENOUGH AND AT A POSITION ACCESSIBLE FROM A LADDER OR THE BALCONY FOR INSPECTION PURPOSES. THE OVERFLOW(S) SHALL BE SIZED TO HANDLE THE MAXIMUM POSSIBLE FILL RATE WITHOUT EXCEEDING THE CAPACITY OF THE OVERFLOW(S). THE DISCHARGE OPENING OF THE OVERFLOW(S) SHALL BE ABOVE THE SURFACE OF THE GROUND AND SHALL NOT BE SUBJECT TO SUBMERGENCE.

6. ALL CLEARWELLS AND WATER STORAGE TANKS SHALL HAVE A LIQUID LEVEL INDICATOR LOCATED AT THE TANK SITE. THE INDICATOR SHALL BE AN PRESSURE TRANSDUCER / LEVEL INDICATOR, CALIBRATED IN FEET OF WATER. PRESSURE GAUGES MUST NOT BE LESS THAN THREE INCHES IN DIAMETER AND CALIBRATED AT NOT MORE THAN TWO-FOOT INTERVALS. REMOTE READING GAUGES AT THE OWNER'S TREATMENT PLANT OR PUMPING STATION WILL NOT ELIMINATE THE REQUIREMENT FOR A GAUGE AT THE TANK SITE UNLESS THE TANK IS LOCATED AT THE PLANT OR STATION.

7. EACH CLEARWELL OR POTABLE WATER STORAGE TANK SHALL BE PROVIDED WITH A MEANS OF REMOVING ACCUMULATED SILT AND DEPOSITS AT ALL LOW POINTS IN THE BOTTOM OF THE TANK. DRAINS SHALL NOT BE CONNECTED TO ANY WASTE OR SEWAGE DISPOSAL SYSTEM AND SHALL BE CONSTRUCTED SO THAT THEY ARE NOT A POTENTIAL AGENT IN THE CONTAMINATION OF THE STORED WATER.

8. ALL CLEAR WELLS, GROUND STORAGE TANKS, STANDPIPES, AND ELEVATED TANKS SHALL BE PAINTED, DISINFECTED, AND MAINTAINED IN STRICT ACCORDANCE WITH CURRENT AWWA STANDARDS. HOWEVER, NO TEMPORARY COATINGS, WAX GREASE COATINGS, OR COATING MATERIALS CONTAINING LEAD WILL BE ALLOWED. NO OTHER COATINGS WILL BE ALLOWED WHICH ARE NOT APPROVED FOR USE (AS A CONTACT SURFACE WITH POTABLE WATER) BY THE UNITED STATES ENVIRONMENTAL PROTECTION AGENCY (EPA), NATIONAL SANITATION FOUNDATION (NSF), OR THE UNITED STATES FOOD AND DRUG ADMINISTRATION (FDA). ALL NEWLY INSTALLED COATINGS MUST CONFORM TO ANSI/NSF STANDARD 61 AND MUST BE CERTIFIED BY AN ORGANIZATION ACCREDITED BY ANSI.

9. NO TANKS OR CONTAINERS SHALL BE USED TO STORE POTABLE WATER THAT HAVE PREVIOUSLY BEEN USED FOR ANY NON-POTABLE PURPOSE. WHERE A USED TANK IS PROPOSED FOR USE, A LETTER FROM THE PREVIOUS OWNER OR OWNERS MUST BE SUBMITTED TO THE COMMISSION WHICH STATES THE USE OF THE TANK.

10. ACCESS MANWAYS IN THE RISER PIPE, SHELL AREA, ACCESS TUBE, BOWL AREA OR ANY OTHER LOCATION OPENING DIRECTLY INTO THE WATER COMPARTMENT SHALL BE LOCATED IN STRICT ACCORDANCE WITH CURRENT AWWA STANDARDS. WHERE NECESSARY, FOR ANY ACCESS MANWAY WHICH ALLOWS DIRECT ACCESS TO THE WATER COMPARTMENT, A GASKET SHALL BE USED TO MAKE A POSITIVE SEAL WHEN THE ACCESS MANWAY IS CLOSED.

### TEXAS COMMISSION ON ENVIROMENTAL QUALITY
### WATER DISTRIBUTION SYSTEM
### WATER LINE GENERAL CONSTRUCTION NOTES

1. THIS WATER DISTRIBUTION SYSTEM MUST BE CONSTRUCTED IN ACCORDANCE WITH THE CURRENT TEXAS COMMISSION ON ENVIRONMENTAL QUALITY (TCEQ) RULES AND REGULATIONS FOR PUBLIC WATER SYSTEMS 30 TEXAS ADMINISTRATIVE CODE (TAC) CHAPTER 290 SUBCHAPTER D.

2. ALL NEWLY INSTALLED PIPES AND RELATED PRODUCTS MUST CONFORM TO AMERICAN NATIONAL STANDARDS INSTITUTE/NATIONAL SANITATION FOUNDATION (ANSI/NSF) STANDARD 61 AND MUST BE CERTIFIED BY AN ORGANIZATION ACCREDITED BY ANSI.

3. PLASTIC PIPE FOR USE IN PUBLIC WATER SYSTEMS MUST BEAR THE NATIONAL SANITATION FOUNDATION SEAL OF APPROVAL (NSF-PW) AND HAVE AN ASTM DESIGN PRESSURE RATING OF AT LEAST 235 PSIOR A STANDARD DIMENSION RATIO OF 26 OR LESS.

4. NO PIPE WHICH HAS BEEN USED FOR ANY PURPOSE OTHER THAN THE CONVEYANCE OF DRINKING WATER SHALL BE ACCEPTED OR RELOCATED FOR USE IN ANY PUBLIC DRINKING WATER SUPPLY.

5. WATER TRANSMISSION AND DISTRIBUTION LINES MUST BE INSTALLED IN ACCORDANCE WITH THE MANUFACTURER'S INSTRUCTIONS. HOWEVER, THE TOP OF THE WATER LINE MUST BE LOCATED BELOW THE FROST LINE AND IN NO CASE SHALL THE TOP OF THE WATER LINE BE LESS THAN 42 INCHES BELOW GROUND SURFACE.

6. THE HYDROSTATIC LEAKAGE RATE SHALL NOT EXCEED THE AMOUNT ALLOWED OR RECOMMENDED BY AWWA FORMULA FOR PVC PIPE: L= (N)(D)(P)/7,400. THE FORMULA FOR DUCTILE OR CAST IRON PIPE IS L= (S)(D)/P)/133,200.

7. THE USE OF PIPES AND PIPE FITTINGS THAT CONTAIN MORE THAN 8.0% LEAD OR SOLDERS AND FLUX THAT CONTAINS MORE THAN 0.2% LEAD IS PROHIBITED IN THE FOLLOWING CIRCUMSTANCES FOR INSTALLATION OR REPAIR OF ANY PUBLIC WATER SUPPLY AND FOR INSTALLATION OR REPAIR OF ANY PLUMBING IN A RESIDENTIAL OR NONRESIDENTIAL FACILITY PROVIDING WATER FOR HUMAN CONSUMPTION AND CONNECTED TO A PUBLIC DRINKING WATER SUPPLY SYSTEM.

8. THE CONTRACTOR SHALL INSTALL APPROPRIATE AIR RELEASE DEVICES IN THE DISTRIBUTION SYSTEM AT ALL POINTS WHERE TOPOGRAPHY OR OTHER FACTORS MAY CREATE AIR LOCKS IN THE LINES. ALL VENT OPENINGS TO THE ATMOSPHERE SHALL BE COVERED WITH 16-MESH OR FINER, CORROSION RESISTANT SCREENING MATERIAL OR AN ACCEPTABLE EQUIVALENT.

9. THE SYSTEM SHALL BE DESIGNED TO AFFORD EFFECTIVE CIRCULATION OF WATER WITH A MINIMUM OF DEAD ENDS. ALL DEAD-END MAINS SHALL BE PROVIDED WITH ACCEPTABLE FLUSH VALVES AND DISCHARGE PIPING. ALL DEAD-END LINES LESS THAN TWO INCHES IN DIAMETER WILL NOT REQUIRE FLUSH VALVES IF THEY END AT A CUSTOMER SERVICE. WHERE DEAD ENDS ARE NECESSARY AS A STAGE IN THE GROWTH OF THE SYSTEM, THEY SHALL BE LOCATED AND ARRANGED TO ULTIMATELY CONNECT THE ENDS TO PROVIDE CIRCULATION.

10. THE CONTRACTOR SHALL MAINTAIN A MINIMUM SEPARATION DISTANCE IN ALL DIRECTIONS OF NINE FEET BETWEEN THE PROPOSED WATERLINE AND WASTEWATER COLLECTION FACILITIES INCLUDING MANHOLES AND SEPTIC TANK DRAINFIELDS. IF THIS DISTANCE CANNOT BE MAINTAINED, THE CONTRACTOR MUST IMMEDIATELY NOTIFY THE PROJECT ENGINEER FOR FURTHER DIRECTION. SEPARATION DISTANCES, INSTALLATION METHODS, AND MATERIALS UTILIZED MUST MEET §290.44(E) OF THE CURRENT RULES.

11. THE CONTRACTOR SHALL NOT PLACE THE PIPE IN WATER OR WHERE IT CAN BE FLOODED WITH WATER OR SEWAGE DURING ITS STORAGE OR INSTALLATION.

12. THE CONTRACTOR SHALL DISINFECT THE NEW WATER MAINS IN ACCORDANCE WITH AWWA STANDARD C651 AND THEN FLUSH AND SAMPLE THE LINES BEFORE BEING PLACED INTO SERVICE. SAMPLES SHALL BE COLLECTED FOR MICROBIOLOGICAL ANALYSIS TO CHECK THE EFFECTIVENESS OF THE DISINFECTION PROCEDURE WHICH SHALL BE REPEATED IF CONTAMINATION PERSISTS. A MINIMUM OF ONE SAMPLE FOR EACH 1,000 FEET OF COMPLETED WATER LINE WILL BE REQUIRED OR AT THE NEXT AVAILABLE SAMPLING POINT BEYOND 1,000 FEET AS DESIGNATED BY THE DESIGN ENGINEER.

FREESE AND NICHOLS, INC.
TEXAS REGISTERED ENGINEERING FIRM F-2144

STATE OF TEXAS — RONALD G. HINES — 81073 — LICENSED PROFESSIONAL ENGINEER — 1-19-11 — Completing

FREESE NICHOLS
2220 San Jacinto Blvd., Suite 330
Denton, Tx. 76205
Phone - (940) 387-4500
Fax - (940) 383-4579
Web - www.freese.com

TOWN OF ADDISON, TEXAS
SURVEYOR 1.5 MG EST
CIVIL
GENERAL NOTES

| NO. | ISSUES | BY | DATE |
|---|---|---|---|
| | | | |

VERIFY SCALE Bar is one inch on original drawing. If not one inch on this sheet, adjust scale.
0 1"

| | |
|---|---|
| F&N JOB NO. | ADD08459 |
| DATE | 01/21/11 |
| DESIGNED | DAT |
| DRAWN | SB |
| REVISED | RJS |
| CHECKED | RGK |
| FILE NAME | GN-ALL-NOTES.SHT |

SHEET G-2

MicroStation V8 User: amr Office: Denton
3-Border.dgn
ADD08459 N:\IF\Drawings\GN-ALL-NOTES.SHT
Plotter: J (HP Designjet 4000 ps) Model: Default
Plot Area: Layout: XM\Denton 11x17-Mono.plt Project: Freese and Nichols, Inc.
Plot Scale: 1.000 Plot Date: 01/19/2011 - 01:13:08 PM

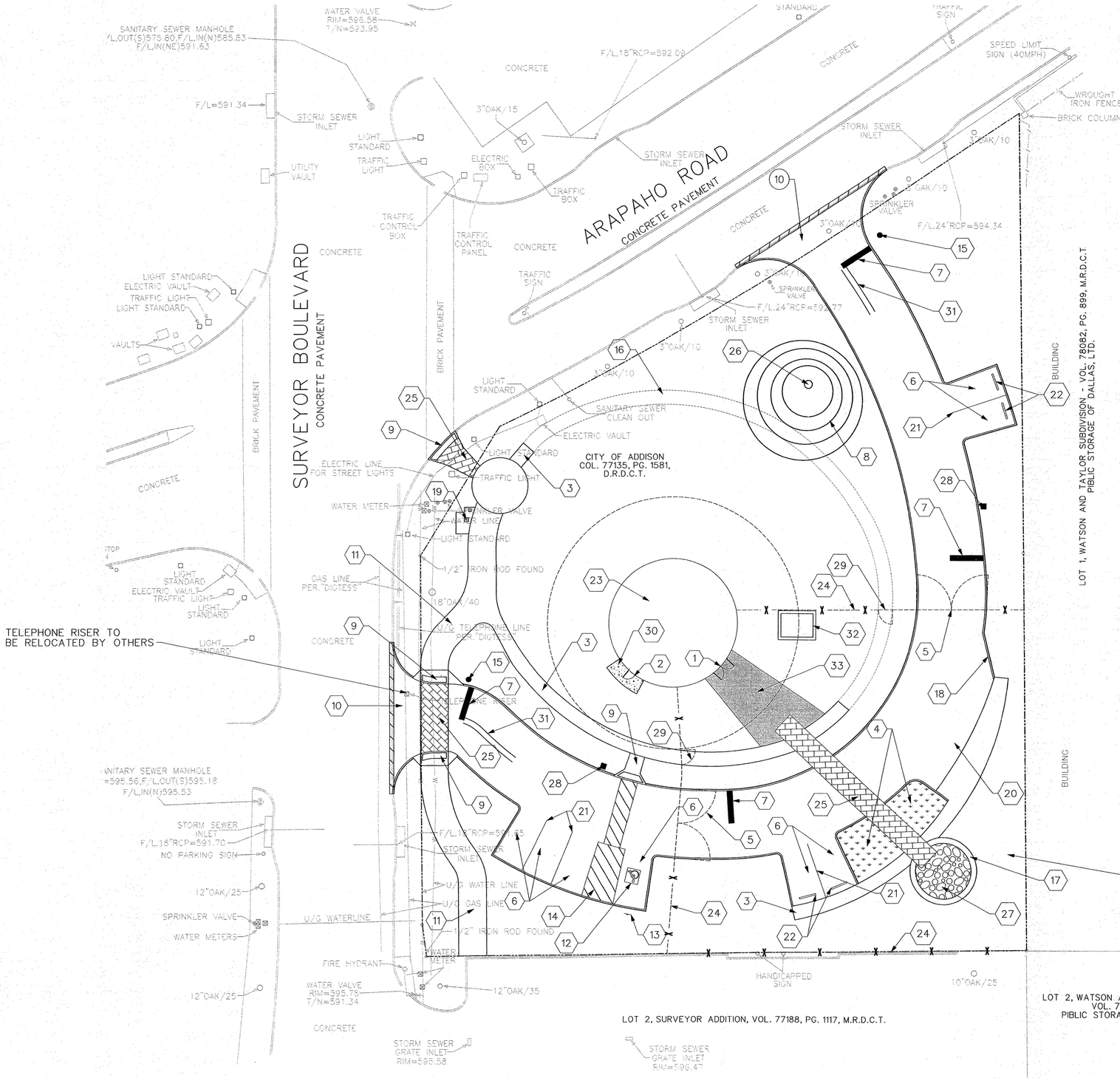


## NOTES BY SYMBOL '⬡'

1. DOUBLE DOORS (SEE ARCHITECTURAL PLANS)
2. EMERGENCY EXIT MAN DOOR (SEE ARCH. PLANS)
3. 5' CONCRETE SIDEWALK
4. GRASS AREA
5. 24' DOUBLE SWING GATE
6. 10'X20' PARKING SPACES
7. 24" WHITE THERMOPLASTIC STOP BAR
8. LANDSCAPING BERM (SEE SHEET C-3)
9. TYPE A HANDICAP RAMP SEE DT-09 FOR DETAILS
10. DRIVEWAY APPROACH
11. 10' CONCRETE SIDEWALK
12. HANDICAP MARKER
13. HANDICAP SIGN
14. 6" WHITE STRIPE VAN ACCESSIBLE LANE
15. STOP SIGN
16. FUTURE 5' SIDEWALK
17. LANDSCAPING WALL
18. 10' CURB TAPER
19. PROPOSED DRINKING FOUNTAIN WITH CONCRETE WALKWAY PAD
20. PARKING SPACE FOR LARGE VEHICLES
21. 4" WHITE PARKING LINE STRIPE
22. CONCRETE PARKING WHEEL STOPS
23. LEARNING CENTER IN PEDESTAL, SEE ARCHITECTURAL AND MEP PLANS
24. PERIMETER FENCE
25. PAVESTONE PAVERS, PROVIDE EDGE STRIP WHERE REQUIRED BY DETAIL SHEET DT-06
26. TURBINE DISPLAY UNIT (BY OTHERS)
27. DECOMPOSED GRANITE
28. GATE ENTRY CARD READER
29. 5' MANGATE
30. CONCRETE LANDING WALK
31. 4" DOUBLE YELLOW SOLID LINE, 20' LONG
32. CONTROL VALVE VAULT
33. BASE BID-REINFORCED CONC. SIDEWALK SECTION
ALTERNATE BID-PAVESTONE PAVERS

FREESE AND NICHOLS INC.
TEXAS REGISTERED ENGINEERING FIRM F-2144
STATE OF TEXAS
8107
LICENSED
PROFESSIONAL
ENGINEER
1-19-11
FREESE NICHOLS
2220 San Jacinto Blvd., Suite 330
Denton, TX 76205
Phone (940) 382-4600
Fax (940) 381-4707
Web - www.freese.com

TOWN OF ADDISON, TEXAS
SURVEYOR 1.5 MG EST
CIVIL
SITE PLAN

| NO. | ISSUES | BY | DATE |
|---|---|---|---|

F&N JOB NO. ADD08459
DATE 01/21/11
DESIGNED DAT
DRAWN SB
REVISED RJS
CHECKED RGK
FILE NAME CV-EST-PL-SITE01.SHT

VERIFY SCALE Bar is one inch on original drawing. If not one inch on this sheet, adjust scale.
0 1"

SHEET C-1

MicroStation V8 User: amr Office: Denton
ADD08459 J:\ADD\Drawings\CV-EST-PL-SITE01.SHT
Plotted: 19-JAN-2011 01:14:18 PM by amr
Plot Scale: 20.0000 '/ 1in Model: Default
Date: 01\19\2011 - 01:14:18 PM Project: Freese and Nichols, inc.
FN-ADDISON-WT-12-23-08.dwg
34Border.dgn
cv-utl-pi-hatch01.dgn
cv-utl-pi-tank01.dgn
cv-utl-pi-tank01.dwg
cv-utl-pi-hatch01.dgn
CV-PPL-PL-EXBASE01.dwg
Office: Denton ADD08459 Date: 01\19\2011 - 01:14:18 PM User: amr File: N:\IF\Drawings\CV-EST-PL-SITE01.SHT

## CONTROL POINTS BY SYMBOL "△"

1. CONTROL POINT #1
   "X" CUT IN INLET
   N=7034612.71850
   E=2475625.68347
   EL=597.59'

2. CONTROL POINT #2
   "X" CUT IN INLET
   N=7034371.96140
   E=2475509.21235
   EL=595.21'

3. CONTROL POINT #3
   1/2" IRON ROD WITH
   RED "RANDOM POINT" CAP
   N=7034442.69617
   E=2475669.10377
   EL=598.39'

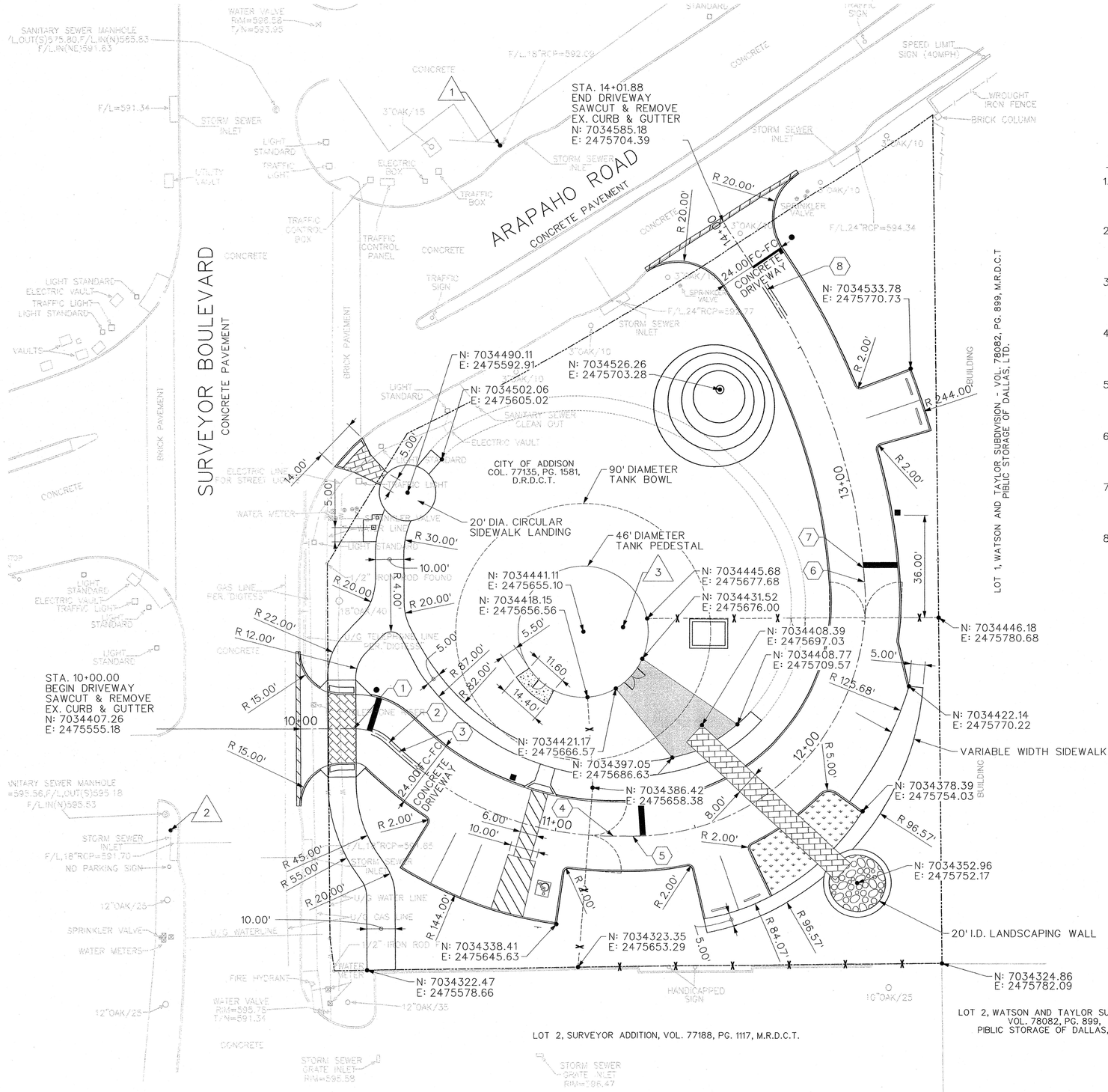


## NOTES BY SYMBOL "⬡"

1. STA. 10+18.90
   CURVE 1 P.C.
   N: 7034407.36
   E: 2475574.08

2. STA. 10+32.45
   CURVE 1 P.T.
   N: 7034402.56
   E: 2475586.41

3. STA. 10+37.18
   CURVE 2 P.C.
   N: 7034399.34
   E: 2475589.88

4. STA. 11+20.65
   CURVE 2 P.T.
   N: 7034369.46
   E: 2475665.76

5. STA. 11+27.58
   CURVE 3 P.C.
   N: 7034369.44
   E: 2475672.68

6. STA. 12+63.84
   CURVE 3 P.T.
   N: 7034458.68
   E: 2475754.57

7. STA. 12+68.77
   CURVE 4 P.C.
   N: 7034463.60
   E: 2475754.13

8. STA. 13+73.57
   CURVE 4 P.T.
   N: 7034561.54
   E: 2475719.97

CURVE 1
Δ= 43° 07'54.46"
T = 7.11'
R = 18.00'
L = 13.55'

CURVE 2
Δ= 42° 41'56.00"
T = 43.78'
R = 112.00'
L = 83.47'

CURVE 3
Δ= 95° 12'35.91"
T = 89.82'
R = 82.00'
L = 136.26'

CURVE 4
Δ= 28° 19'18.30"
T = 53.49'
R = 212.00'
L = 104.79'

N

0 10' 20' 40'
SCALE IN FEET


FREESE AND NICHOLS, INC.
TEXAS REGISTERED ENGINEERING FIRM F-2144
STATE OF TEXAS
STEPHEN J. BUTLER
81073
REGISTERED PROFESSIONAL ENGINEER
1-18-11
FREESE NICHOLS
2220 San Jacinto Blvd, Suite 330
Denton, Tx. 76205
Phone - (940) 383-4600
Fax - (940) 383-4677
Web - www.freese.com


TOWN OF ADDISON, TEXAS
# SURVEYOR 1.5 MG EST
CIVIL
# DIMENSIONAL CONTROL PLAN

| NO. | ISSUES | BY | DATE |
|---|---|---|---|

VERIFY SCALE Bar is one inch on original drawing. If not one inch on this sheet, adjust scale.

F&N JOB NO. ADD08459
DATE 01/21/11
DESIGNED DAT
DRAWN SB
REVISED RJS
CHECKED RGK
FILE NAME CV-EST-PL-DIMEN01.SHT

SHEET C-2


MicroStation V8 User: amr Office: Denton
ADD08459 J:\IF\Drawings\CV-EST-PL-DIMEN01.SHT
Model: Default Model Name: Project Model
Plot Scale: 20.0000 '/ in. Model Default
Date: 01/19/2011 - 01:15:56 PM Project: Freese and Nichols, Inc.
FN=ADDISON-WT-12-23-08.dwg cv-util-pl-hotel01.dgn
34Border.dgn cv-util-pl-tank01.dgn
cv-util-pl-tank01.dgn

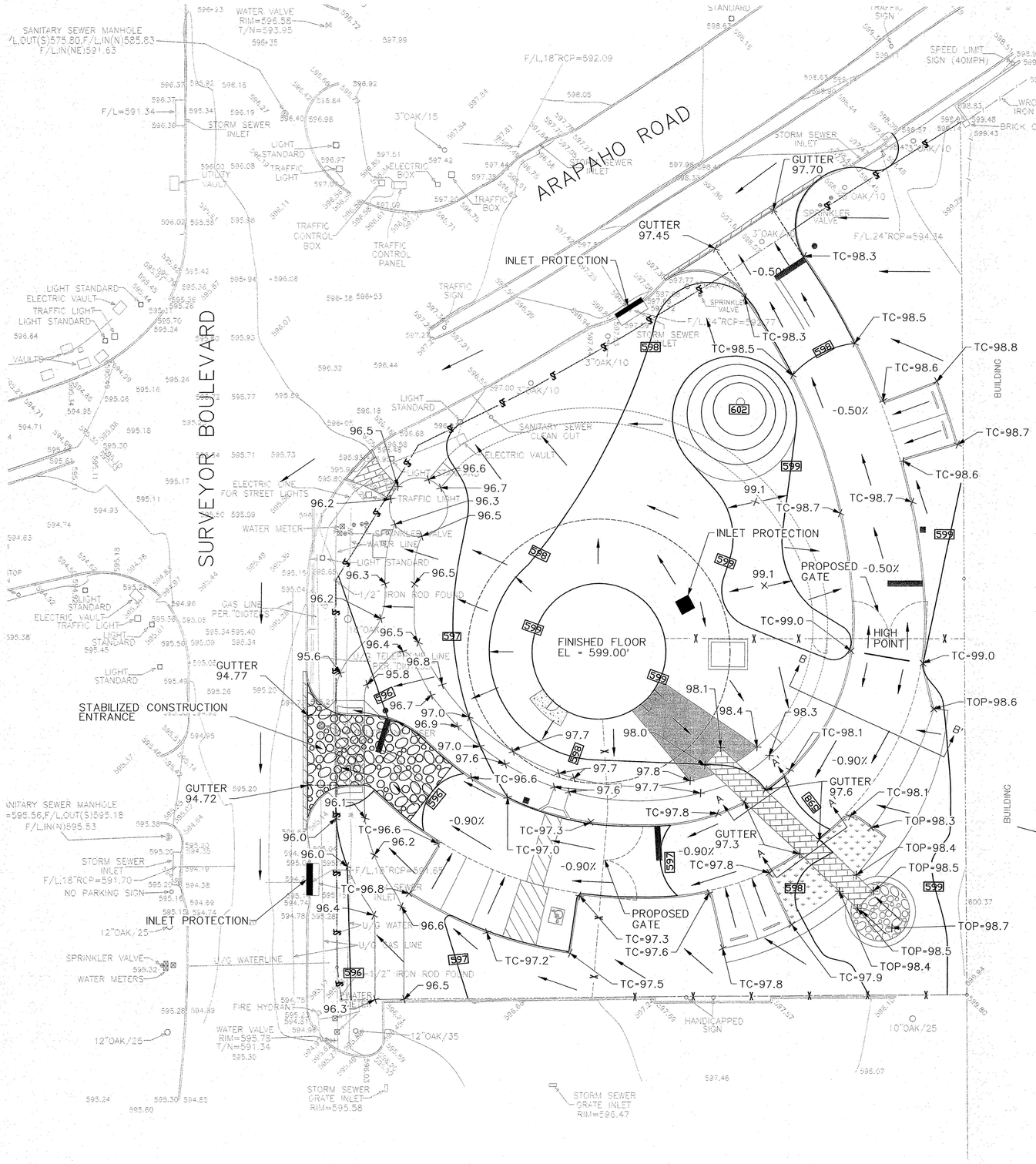


## LEGEND

- SILT FENCE
- INLET PROTECTION
- FLOW DIRECTION

## TYPICAL SECTION A-A'

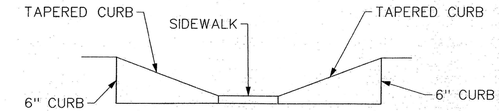


## TYPICAL SECTION B-B'

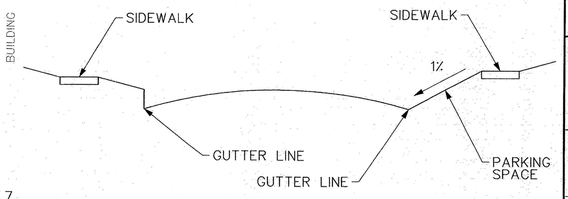


N

0 10' 20' 40'
SCALE IN FEET

FREESE AND NICHOLS, INC.
TEXAS REGISTERED ENGINEERING FIRM F-2144

STATE OF TEXAS
81073
REGISTERED
PROFESSIONAL
ENGINEER
1-18-11

FREESE NICHOLS
2220 San Jacinto Blvd., Suite 330
Denton, Tx. 76205
Phone: (940) 382-4600
Fax: (940) 383-4677
Web - www.freese.com

TOWN OF ADDISON, TEXAS

# SURVEYOR 1.5 MG EST

CIVIL

# GRADING & EROSION CONTROL PLAN

| NO. | ISSUES | BY | DATE |
|---|---|---|---|

VERIFY SCALE Bar is one inch on original drawing. If not one inch on this sheet, adjust scale.

| F&N JOB NO. | ADD08459 |
|---|---|
| DATE | 01/21/11 |
| DESIGNED | DAT |
| DRAWN | SB |
| REVISED | RJS |
| CHECKED | RGK |
| FILE NAME | CV-EST-PL-GRAD01.SHT |

SHEET
C-3

MicroStation V8 User: amr Office: Denton
Model: N:\IF\Drawings\CV-EST-PL-GRAD01.SHT
Plotter: J:\plotdrv\CMYK\Denton\11x17-Mono.plt Model: Default
Date & Time: 01/19/2011 01:17:03 PM Project: Freese and Nichols, Inc-ustf-freese.dgn
FN:ADDISON-WT-12-23-08.dwg cv-ustf-pl-grade01.dgn
cv-ustf-pl-ea01.dgn cv-ustf-pl-exelev.dgn
cv-ustf-pl-tank01.dgn
cv-ustf-pl-esc01.dgn

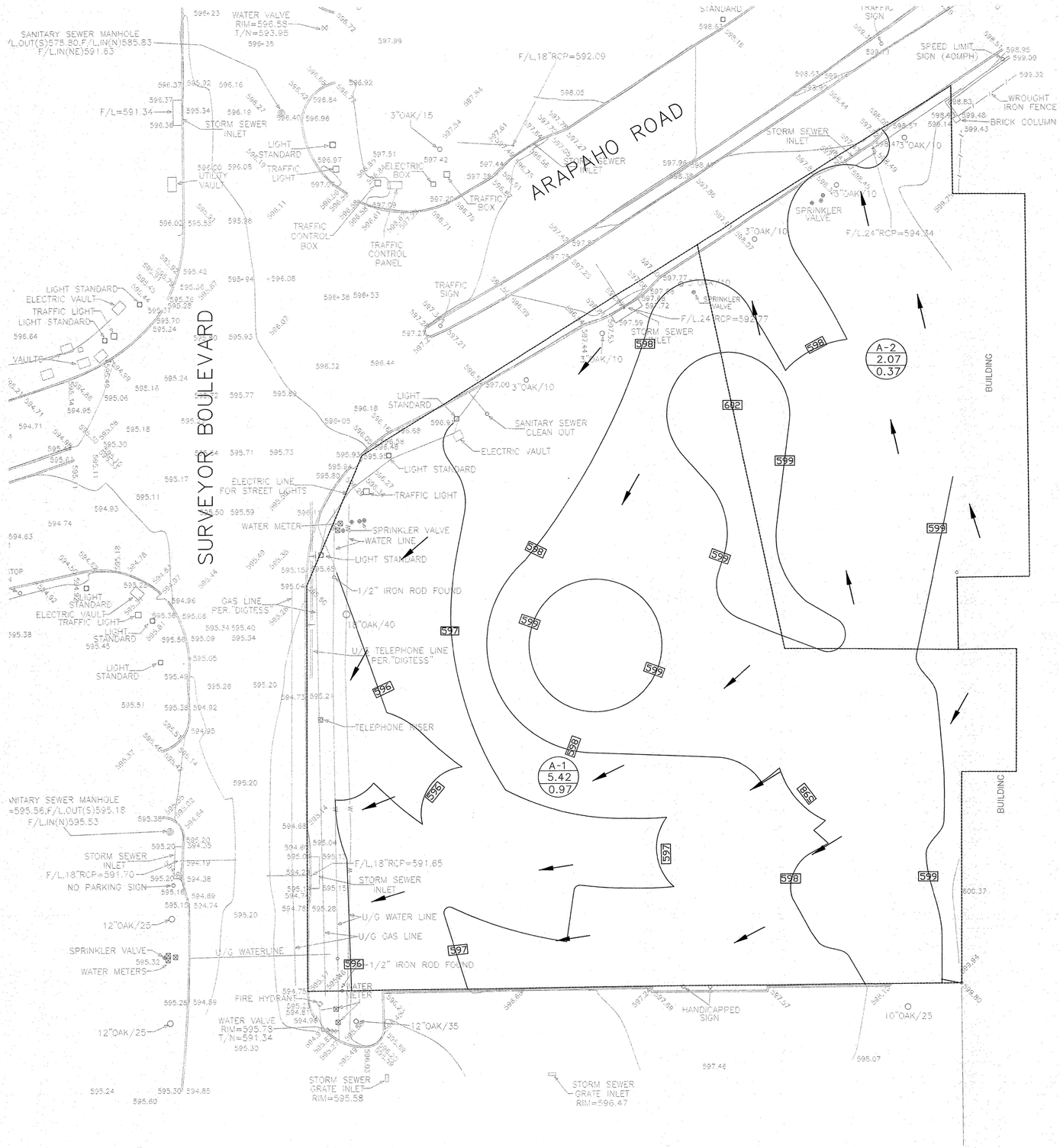


## LEGEND

- DRAINAGE AREA BOUNDARY
- FLOW DIRECTION
- AREA / Q(CFS) / AC. — DRAINAGE DESCRIPTION

| EXISTING CONDITIONS | | | | | |
|---|---|---|---|---|---|
| AREA NO. | AREA (acre) | C-VALUE | Tc (min) | I (in/hr) | Q (cfs) |
| A-1 | 0.97 | 0.30 | 15.00 | 7.98 | 2.32 |
| A-2 | 0.37 | 0.30 | 15.00 | 7.98 | 0.89 |

| PROPOSED CONDITIONS | | | | | |
|---|---|---|---|---|---|
| AREA NO. | AREA (acre) | C-VALUE | Tc (min) | I (in/hr) | Q (cfs) |
| A-1 | 0.97 | 0.60 | 15.00 | 7.98 | 4.64 |
| A-2 | 0.37 | 0.60 | 15.00 | 7.98 | 1.78 |

| PROPOSED CONDITIONS RUNOFF COEFFICIENT | | |
|---|---|---|
| AREA DESCRIPTION | AREA (sf) | C-VALUE |
| DRIVE PAVEMENT | 13,500 | 0.95 |
| SIDEWALKS | 5,550 | 0.95 |
| PAVERS | 1,000 | 0.95 |
| ELEVATED TANK | 6,362 | 1.00 |
| GRASSED SPACE | 31,958 | 0.30 |
| COMPOSITE | 58,370 | 0.60 |

FREESE AND NICHOLS, INC.
TEXAS REGISTERED ENGINEERING FIRM F-2144

STATE OF TEXAS — REGISTERED — 81073 — PROFESSIONAL ENGINEER — CHRISTOPHER R. JOHNSON
1-14-11

FREESE NICHOLS
2220 San Jacinto Blvd. Suite 330
Denton, Tx. 76205
Phone - (940) 382-4600
Fax - (940) 387-4677
Web - www.freese.com

TOWN OF ADDISON, TEXAS
SURVEYOR 1.5 MG EST
CIVIL
DRAINAGE AREA MAP

| NO. | ISSUES | BY | DATE |
|---|---|---|---|

F&N JOB NO. AD08459
DATE 01/21/11
DESIGNED DAT
DRAWN SB
REVISED RJS
CHECKED RGK
FILE NAME CV-EST-PL-DAM01.SHT

VERIFY SCALE Bar is one inch on original drawing. If not one inch on this sheet, adjust scale.
0 1"

SHEET C-4

MicroStation V8 User: amr Office: Denton
AD08459 N:\IF\Drawings\CV-EST-PL-DAM01.SHT
Plot Date/Time: 01/19/2011 - 01:18:07 PM
Plot Scale: 20.0000 '= 1" Plot Driver: HP Laser Jet 4000 Series PCL6
Date: 01\19\2011 - 01:18:07 PM

FN-ADDISON-WT-12-23-08.dwg
34border.dgn
cv-utl-pl-exsev01.dgn
cv-utl-pl-tank01.dgn
Model: Default
Project: Freese and Nichols Incr-utl-pl-note(s).dgn

cv-utl-pl-grade01.dgn
cv-utl-pl-exsev.dgn
cv-utl-pl-dem.dgn

Office: Denton AD08459 Date: 01\19\2011 - 01:18:07 PM User: amr File: N:\IF\Drawings\CV-EST-PL-DAM01.SHT

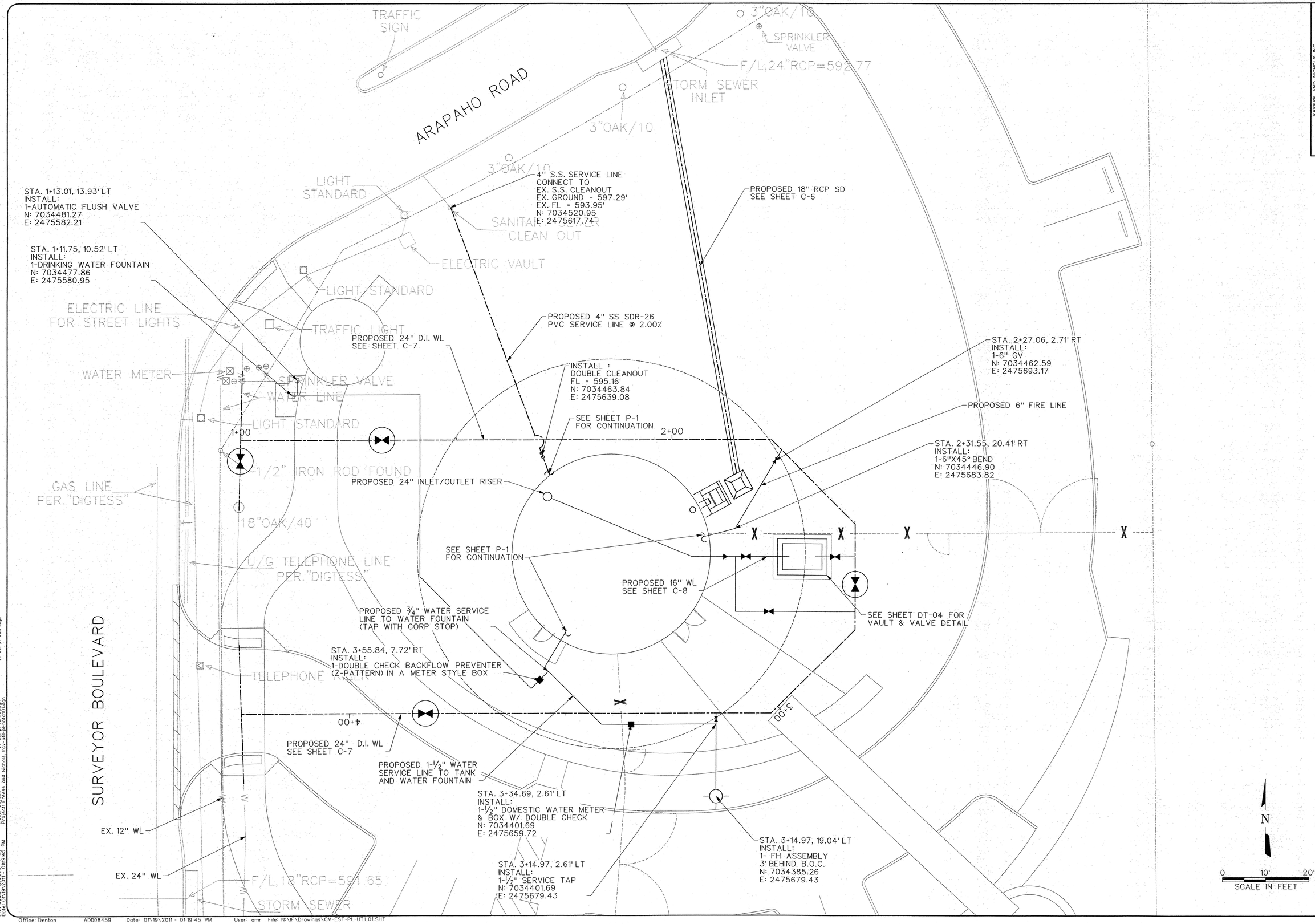


FREESE AND NICHOLS, INC.
TEXAS REGISTERED ENGINEERING FIRM F-2144

STATE OF TEXAS
RONALD G. KING
81073
LICENSED
PROFESSIONAL ENGINEER
1-19-11

FREESE AND NICHOLS
2220 San Jacinto Blvd., Suite 330
Denton, Tx. 76205
Phone - (940) 387-4600
Fax - (940) 387-4677
Web - www.freese.com

TOWN OF ADDISON, TEXAS

# SURVEYOR 1.5 MG EST

CIVIL

# UTILITY PLAN

| NO. | ISSUES | BY | DATE |
|---|---|---|---|

F&N JOB NO. ADD08459
DATE 01/21/11
DESIGNED DAT
DRAWN SB
REVISED RJS
CHECKED RGK
FILE NAME CV-EST-PL-UTIL01.SHT

VERIFY SCALE Bar is one inch on original drawing. If not one inch on this sheet, adjust scale.

SHEET C-5

MicroStation V8 User: amr Office: Denton
ADD08459 \N:\IF\Drawings\CV-EST-PL-UTIL01.SHT
Plotter: J:\plotdrv_XM\Denton\11x17-Mono.plt
Plot Scale: 10.0000 1/ in. Model: Default
Date: 01\19\2011 - 01:19:45 PM Project: Freese and Nichols, Inc.

FN-ADDISON-WT-12-23-08.dwg
34Border.dgn
cv-util-pl-site01.dgn
cv-util-pl-tank01.dgn
cv-util-pl-hatch01.dgn
cv-util-pl-wtr01.dgn
ADDISON-WATER TANK-4-5-10.dwg
cv-util-pl-SS01.dgn
cv-util-pl-SS01.dgn

Office: Denton ADD08459 Date: 01\19\2011 - 01:19:45 PM User: amr File: N:\IF\Drawings\CV-EST-PL-UTIL01.SHT

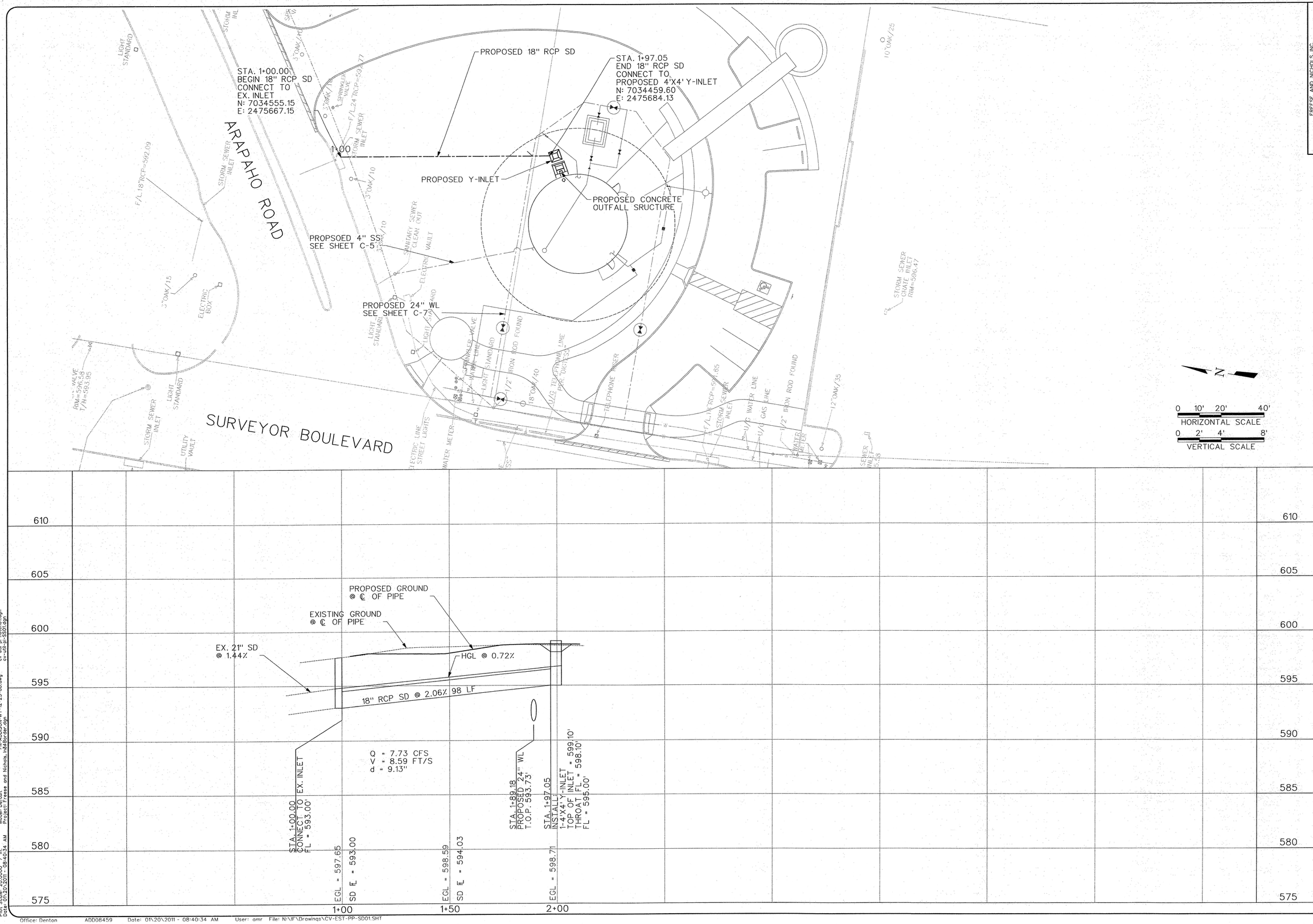


FREESE AND NICHOLS, INC.
TEXAS REGISTERED ENGINEERING FIRM F-2144

STATE OF TEXAS
RONALD G. KING
81073
LICENSED
PROFESSIONAL ENGINEER
1-19-11

FREESE AND NICHOLS
2220 San Jacinto Blvd., Suite 330
Denton, Tx. 76205
Phone - (940) 387-4600
Fax - (940) 387-4677
Web - www.freese.com

TOWN OF ADDISON, TEXAS
SURVEYOR 1.5 MG EST

CIVIL
STORM DRAIN PLAN AND PROFILE
STA. 1+00 TO STA. 1+97.05

| NO. | ISSUES | BY | DATE |
|---|---|---|---|
| | | | |

F&N JOB NO. ADD08459
DATE 01/21/11
DESIGNED DAT
DRAWN RJS
REVISED
CHECKED RGK
FILE NAME CV-EST-PP-SD01.SHT

VERIFY SCALE Bar is one inch on original drawing. If not one inch on this sheet, adjust scale.

SHEET C-6

Office: Denton ADD08459 Date: 01\20\2011 - 08:40:34 AM User: amr File: N:\IF\Drawings\CV-EST-PP-SD01.SHT

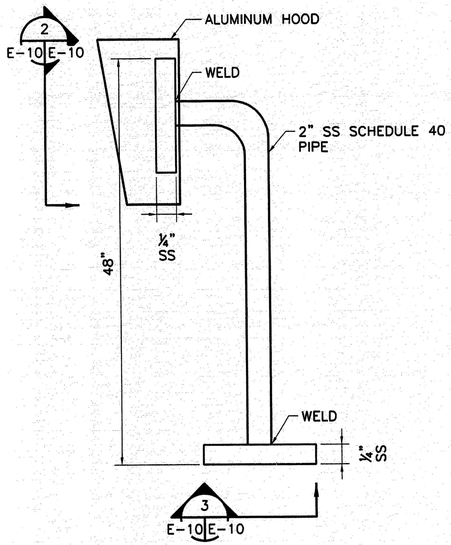


NO.1 GENERAL NOTES:
1. MOUNTING HARDWARE AND BOLTS SHALL BE STAINLESS STEEL.

1 MOUNTING POST DETAIL
NOT TO SCALE

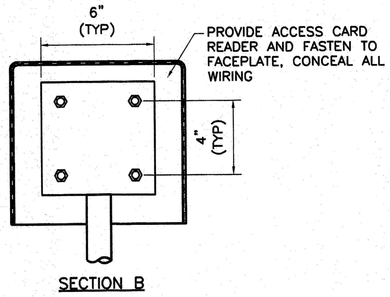


SECTION B

NO.2 GENERAL NOTES:
1. MOUNTING HARDWARE AND BOLTS SHALL BE STAINLESS STEEL.

2 MOUNTING POST FACEPLATE DETAIL
NOT TO SCALE

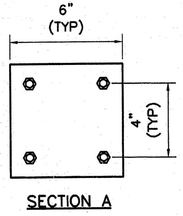


SECTION A

NO.3 GENERAL NOTES:
1. MOUNTING HARDWARE AND BOLTS SHALL BE STAINLESS STEEL.

3 MOUNTING POST BASEPLATE DETAIL
NOT TO SCALE

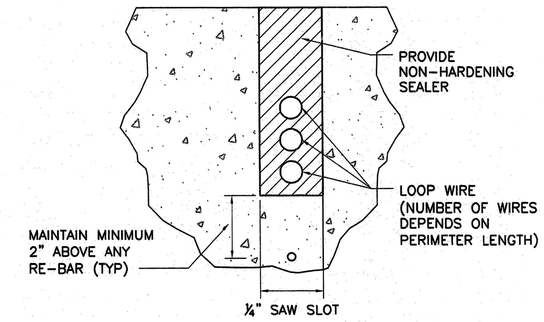


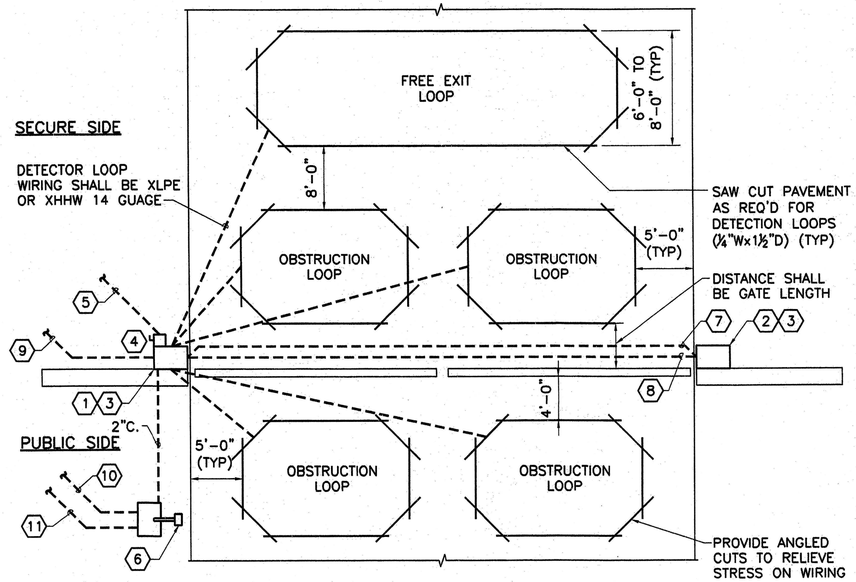


NO.5 GENERAL NOTES:
1. DESIGN IS BASED ON A SWING GATE OPERATOR. THE SLAVE GATE OPERATOR OPERATES OFF ELECTRIC CONTROL EXTENDED FROM THE MASTER GATE OPERATOR AND THEREFORE THE POWER FEED (120V, 1ø, 60HZ) IS REQUIRED ONLY AT THE MASTER GATE CONTROLLER.
2. PROVIDE AND INSTALL CONTROL WIRING AND POWER AND CONTROL CONDUCTORS FROM MASTER GATE CONTROLLER TO SLAVE GATE OPERATOR IN ACCORDANCE WITH MANUFACTURER'S RECOMMENDATIONS.
3. REFER TO CIVIL PLANS FOR SIZE/LOCATION OF GATE CONTROLLER, BOLLARDS, GATES, FENCES, ETC.
4. THIS DETAIL IS SCHEMATIC IN NATURE AND IS INTENDED TO ILLUSTRATE MAJOR COMPONENTS AND WORK NECESSARY FOR SUCCESSFUL OPERATION OF THE GATE CONTROL SYSTEM. CONTRACTOR SHALL PROVIDE ALL LABOR AND MATERIALS REQUIRED FOR A COMPLETE AND OPERABLE SYSTEM.
5. POLARITIES MUST BE THE SAME ON THE DETECTOR LOOPS OR THE ELECTRIC FIELDS WILL INTERFERE WITH EACH OTHER.

NO.5 NOTES BY SYMBOL "⬡".
1. GATE OPERATOR (MASTER).
2. GATE OPERATOR (SLAVE).
3. PROVIDE CONCRETE BASE FOR GATE OPERATOR. LOCATE PER MANUFACTURER'S INSTALLATION INSTRUCTIONS.
4. POWER FEED FOR GATE CONTROLLER. PROVIDE 30A/1P/NF DISCONNECT SWITCH IN NEMA 4X STAINLESS STEEL ENCLOSURE.
5. TYPICAL POWER FEED FOR GATE CONTROLLER.
6. PROVIDE ELECTRONIC GATE CONTROL CARD READER.
7. PROVIDE MINIMUM 2" CONDUIT BETWEEN MASTER/SLAVE OPERATOR FOR POWER.
8. PROVIDE 1" CONDUIT WITH CONTROL WIRING (3PR. #18 SHLD.) AND MAKE ALL TERMINATIONS. PROVIDE ADDITIONAL 1" SPARE CONDUIT BETWEEN OPERATORS.
9. PROVIDE 1" CONDUIT FROM MASTER GATE OPERATOR TO SECURITY CONTROL PANEL.
10. PROVIDE 1" CONDUIT FROM MOUNTING POST TO LOCATION IN SECURITY CONTROL PANEL AS IDENTIFIED BY OWNER. PROVIDE COMMUNICATION CABLING IN CONDUIT PER MANUFACTURER'S RECOMMENDATIONS. MAKE ALL TERMINATIONS AS REQUIRED.
11. PROVIDE 120V POWER TO MOUNTING POST FOR CONTROL SYSTEM.

5 GATE CONTROLLER DETAIL
NOT TO SCALE

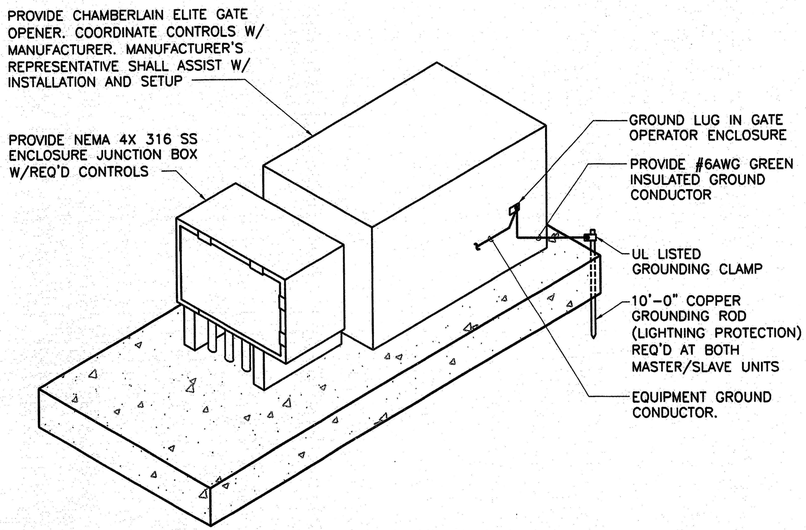


4 SLIDE GATE OPERATOR
NOT TO SCALE

Freese and Nichols, Inc.
Texas Registered Engineering Firm F-2144
JOHN W.P. MANNING
95784
LICENSED PROFESSIONAL ENGINEER
1/18/2011
FREESE NICHOLS
2220 San Jacinto Blvd., Suite 330
Denton, Texas 76205-7589
Phone - (940) 383-4900
Fax - (940) 387-4677

TOWN OF ADDISON, TEXAS
SURVEYOR 1.5 MG EST
ELECTRICAL
DETAILS

F&N JOB NO. ADD08459
DATE 01/18/11
DESIGNED JWM
DRAWN JAF
REVISED -
CHECKED JNH
FILE NAME EL-ADD-DT-MISC03.dwg

NO. | ISSUE | BY | DATE

VERIFY SCALE Bar is one inch on original drawing. If not one inch on this sheet, adjust scale.
0 1"

SHEET E-10
SEQ.

N:\elec\EL-ADD-DT-MISC03.dwg LAYOUT: EL-ADD-DT-MISC03 Jan 18, 2011 - 2:04pm LTS: 1 PSLTS: 1 TWIST:
REFERENCES: N:\elec\Base\JWM-STAMP.dwg, N:\Standard\34BORDER.DWG, 95784.dwg
Date: Jan 18, 2011 - 2:04pm User: ppm File: N:\elec\EL-ADD-DT-MISC03.dwg

213 – 330
08 – 09

# STREET LIGHT FOUNDATION
## 25', 30' & 40' SQUARE STEEL POLE
## 40' M.H. ROUND STEEL POLE

213 – 330
08 – 09

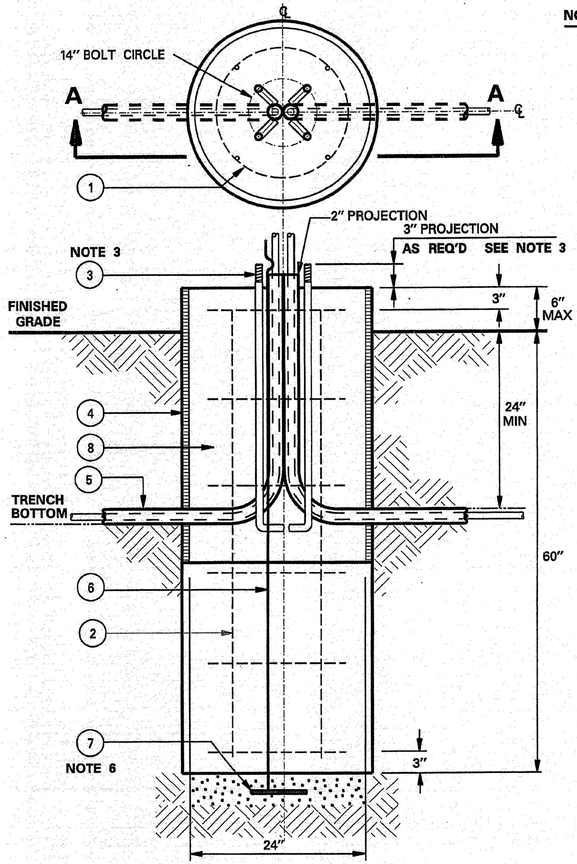


## SECTION "A – A"

**NOTES:**

1. CONCRETE TO BE MINIMUM 3000 PSI AT 28 DAYS. (5 SACK) MAXIMUM AGGREGATE 3/4" TOP OF FOUNDATION TO BE TROWELED TO A FLAT AND LEVEL SURFACE. AVOID EXCESSIVE TROWELING. CONCRETE TO SET A MINIMUM OF 72 HOURS BEFORE POLE INSTALLATION.
2. REBAR HOOPS ARE TIED BEGINNING 3" BELOW TOP OF CONCRETE FORM AND ARE REPEATED AT APPROXIMATE 1' INTERVALS TO BOTTOM OF FOUNDATION.
3. 1" ANCHOR BOLTS TO BE USED WITH 25' & 30' POLE. 1 1/4" ANCHOR BOLTS TO BE USED WITH 40' POLE. USE TEMPLATE FURNISHED BY POLE MANUFACTURER FOR ALIGNING ANCHOR BOLTS. PROJECTION OF 3" ON 25' & 30' SQUARE AND 3 1/2" ON 40' SQUARE AND ROUND POLES.
4. CONCRETE FORM OF SONOTUBE TO EXTEND TO BOTTOM OF TRENCH OR AS NEEDED.
5. PROVIDE MINIMUM 24" GROUND WIRE PIGTAIL OUT OF CONCRETE FOR CONNECTION TO POLE.
6. A MINIMUM OF 12' OF BARE #6 SD CU WIRE TO BE PLACED IN BOTTOM OF HOLE AND COVERED WITH 2" OF DIRT
7. IF SOIL HAS BEEN DISTURBED, EXTEND FOUNDATION BY DEPTH OF DISTURBED SOIL.
8. FOR POLE FOUNDATIONS LARGER THAN 40' NOMINAL MOUNTING HEIGHT, CONTACT DISTRIBUTION STANDARDS.

| ITEM | QTY | DESCRIPTION | | TSN/REF | CU | MU |
|---|---|---|---|---|---|---|
| 1 | 6 | #3 REBAR, 18" DIAMETER HOOP, 3" OVERLAP | | 314470 | | |
| 2 | 4 | #5 REBAR, STRAIGHT, 60" LONG | | 317821 | | |
| 3 | 4 | ANCHOR BOLT, GALV. 1" FOR 25 & 30' POLES | SEE NOTE 3 | 318585 | SLF25/30 | |
| 3 | 4 | ANCHOR BOLT, 1 1/4" GALV FOR 40' POLES | SEE NOTE 3 | 318586 | SLF40 | |
| 4 | AS REQD | CONCRETE FOUNDATION TUBE, 24" DIAMETER | | 313841 | | |
| 5 | AS REQD | CONDUIT, PVC OR PEC (NOT IN FOUNDATION AUN) | | | | |
| 6 | .5 LB | WIRE, #6 COPPER, SOLID | | 303244 | | |
| 7 | 1 | GROUND, POLE BUTT WIRE COIL | | | | |
| 8 | AS REQD | CONCRETE | | | | |
| | | | | | | |
| | 1 | FND, PRECAST 25' & 30' SQR. POLE, 14" BC, 1" BOLTS | | 398698 | SLFPSQ25/30 | |
| | 1 | FND, PRECAST 40' SQR, 40' RND POLE, 14" BC, 1.25" BOLTS | | 398700 | SLFP40 | |

APPROVED BY ONCOR

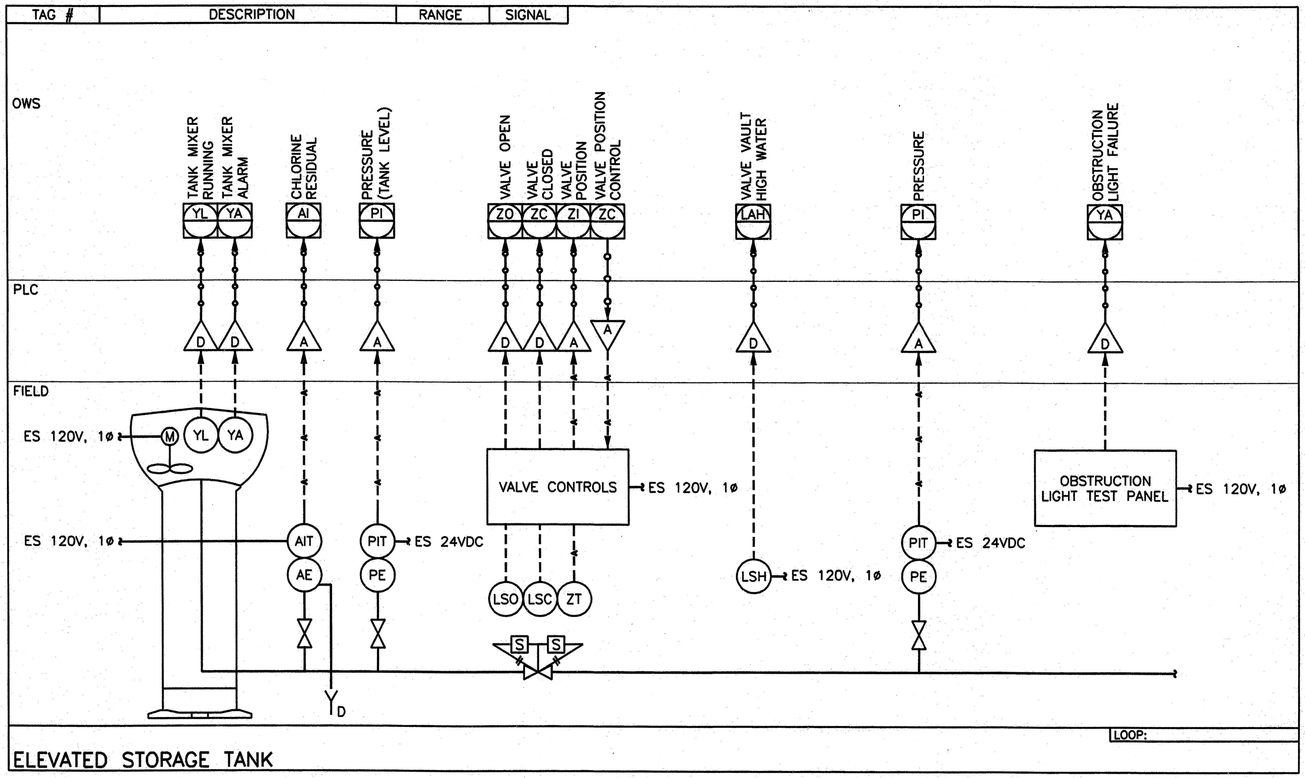


ELEVATED STORAGE TANK

Freese and Nichols, Inc.
Texas Registered Engineering Firm F-2144

STATE OF TEXAS
JOHN W.P. MANNING
95784
LICENSED
PROFESSIONAL ENGINEER
1/18/11

FREESE NICHOLS
2220 San Jacinto Blvd., Suite 330
Denton, Texas 76205-7589
Phone – (940) 387-4600
Fax – (940) 387-4677

TOWN OF ADDISON, TEXAS
SURVEYOR 1.5 MG EST
ELECTRICAL
DETAIL & LOOP DIAGRAM

| NO. | ISSUE | BY | DATE |
|---|---|---|---|

F&N JOB NO. ADD08459
DATE 01/18/11
DESIGNED JWM
DRAWN JAF
REVISED
CHECKED JNH
FILE NAME EL-ADD-DT-MISC05.dwg

VERIFY SCALE Bar is one inch on original drawing. If not one inch on this sheet, adjust scale.
0 1"

SHEET E-11
SEQ.

ACAD Rel 18.0s (LMS Tech) User: ppm LAYOUT: EL-ADD-DT-MISC05
[ADD08459][DTNSRV2] N:\elec\EL-ADD-DT-MISC05.dwg TWIST: CLUALLFREESE.COM
Jan 18, 2011 - 5:38pm PSLTS: 1 LTS: 1
REFERENCES: N:\elec\Base\JWM-STAMP.dwg, N:\Standard\34BORDER.DWG, 95784.dwg

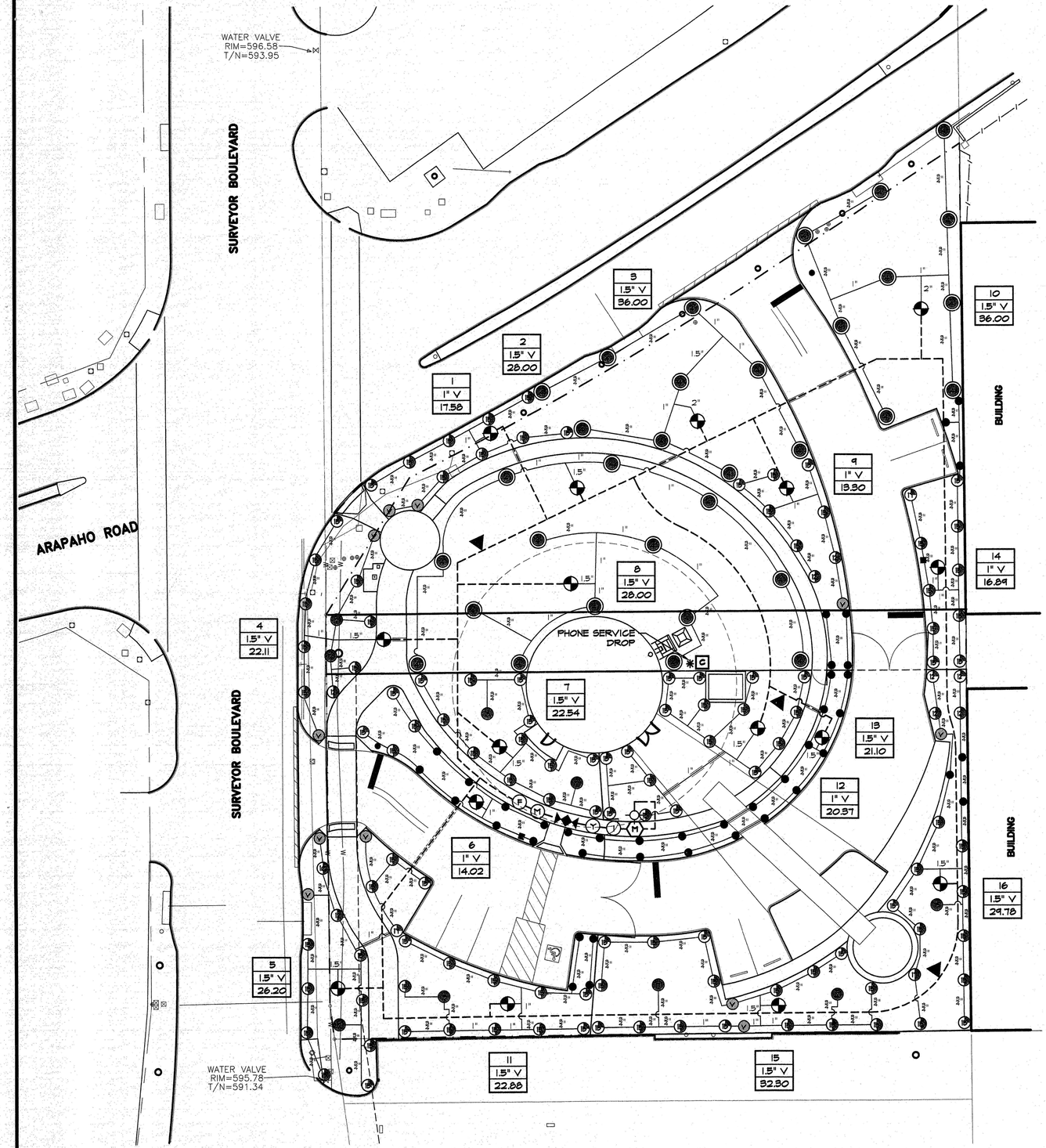


**NOTES:**

001 VALVES & PIPING SHOWN IN PAVING FOR CLARITY ONLY. INSTALL IN ADJACENT LANDSCAPE AREA.

002 ALL LATERAL LINES ARE 3/4" CLASS 200 PVC UNLESS OTHERWISE NOTED ON PLAN.

003 SLEEVES INTENDED FOR THE 2" MAIN LINE ARE TO BE TWO-FOUR INCH SLEEVES SIDE BY SIDE, AND ARE TO BE NO MORE THAN A DEPTH OF TWO FEET BELOW GRADE.

**NOTES CONT'D:**

004 SLEEVE INTENDED FOR LATERAL LINES ARE TO BE ONE FOUR INCH SLEEVE AND ARE TO BE NO MORE THAN A DEPTH OF TWO FEET BELOW GRADE.

005 THE GENERAL CONTRACTOR TO BE LIABLE FOR IRRIGATION SLEEVES.

* 48 HOURS BEFORE IRRIGATION CONSTRUCTION BEGINS, INSTALLERS MUST CALL (800) DIG-TESS.

## IRRIGATION LEGEND AND SCHEDULE

| SYM | DESCRIPTION | MANUFACTURER | MODEL | SIZE / NOZZLE | NOTES |
|---|---|---|---|---|---|
| C | AUTOMATIC CONTROLLER | IRRITROL | RAINMASTER | N/A | PEDESTAL MOUNT, STAINLESS STEEL. INSTALL PER MANUFACTURERS STANDARDS. IN ADDITION, INSTALL WIRELESS RAIN FREEZE SENSOR AND FLOW SENSOR. |
| | REMOTE CONTROL VALVE | IRRITROL | 200 B SERIES | Refer to Plan for Size | INSTALL PER DETAIL IN 10" ROUND BOX w/ 1/2" GRAVEL FILL. |
| | LAWN SPRAY HEAD | RAINBIRD | MPR NOZZLES 1804 BODIES | AS SHOWN ON PLAN | INSTALL PER DETAIL w/ 30 PSI AT BASE OF HEAD |
| V | LAWN SPRAY HEAD (VAN) | RAINBIRD | MPR NOZZLES (VAN) 1804 BODIES | VARIES | INSTALL PER DETAIL w/ 30 PSI AT BASE OF HEAD |
| | 4" POP UP CORNER STRIP | RAINBIRD | 15' STRIP SERIES | 15'-RCS 15'-LCS | INSTALL PER DETAIL w/ 30 PSI AT BASE OF HEAD |
| | 4" POP UP SIDE STRIP | RAINBIRD | 15' STRIP SERIES | 15'-SST | INSTALL PER DETAIL w/ 30 PSI AT BASE OF HEAD |
| | ROTARY SPRAY HEAD | HUNTER | I-20 ULTRA | #4 NOZZLE | INSTALL PER DETAIL w/ 40 PSI AT BASE OF HEAD. |
| M | WATER METER | ---- | PER CITY | 1.5" | INSTALLED BY GENERAL CONTRACTOR |
| | DOUBLE CHECK VALVE | Febco | 850-BV Series | 1.5" | FURNISH AND INSTALL PER LOCAL CODE BY LICENSED IRRIGATION CONTRACTOR. |
| I | ISOLATION VALVE | LASCO/SPEARS | FT-113 | 1.5" | INSTALL PER DETAIL IN STANDARD RECTANGLE BOX w/ 1/2" GRAVEL FILL. |
| Y | WYE STRAINER | Febco | 450 | 1.5" | INSTALL PER DETAIL IN STANDARD RECTANGLE BOX w/ 1/2" GRAVEL FILL. |
| M | MASTER VALVE | IRRITROL | 200 B SERIES | 1.5" | INSTALL PER DETAIL IN STANDARD RECTANGLE BOX w/ 1/2" GRAVEL FILL. |
| F | FLOW METER | HUNTER | FLOW-CLICK-200 | 2" | INSTALL PER DETAIL IN STANDARD RECTANGLE BOX w/ 1/2" GRAVEL FILL. |
| ------ | IRRIGATION SLEEVE | ---- | SCH. 40 w/ 12 GA. PULL WIRE IN SLEEVE | Refer to Plan for Size | DRIVEWAY SLEEVES INSTALLED BY GENERAL CONTRACTOR. SIDEWALK SLEEVES INSTALLED BY IRRIGATION CONTRACTOR. |
| ——— | IRRIGATION MAIN LINE | ---- | SCH. 40 PVC | 2" | 16" INSTALLATION DEPTH |
| ——— | IRRIGATION LATERAL LINE | ---- | CLASS 200 | Refer to Plan for Size | 12" INSTALLATION DEPTH |
| ▲ | QUICK-COUPLER VALVE | CHAMPION | QVC-100VL | 1" | INSTALL PER DETAIL IN 10 INCH DIAMETER VALVE BOX. ROUT AND PAINT "QVC" ON LID. |
| | QUICK-COUPLER KEY | CHAMPION | CK-100 | 1" | FURNISH THREE (x3) TO OWNER |
| | HOSE SWIVEL | CHAMPION | QCS-2 | 1" | FURNISH THREE (x3) TO OWNER |

Valve size in inches

Remote control valve or Automatic Controller

## HYDRAULIC CALCULATION NOTES:

Ten days prior to commencing work, verify static pressure. If static pressure is less than 60 psi do not start work until notified in writing to proceed by Owner. If Contractor proceeds with work without authorization from Owner, the Contractor shall be financially responsible to correct, modify or repair any items or materials that may be required to provide a fully functioning and operational irrigation system in compliance with the plans and specifications. Hydraulic calculations for this system are based on the static pressure as stated above. The static pressure shown is an assumed pressure, a pressure measured at the site, or an estimated pressure provided by the county of city.

## HYDRAULIC CALCULATIONS FROM ZONE #10

| ITEM | SIZE | PSI | NOTES |
|---|---|---|---|
| MAXIMUM GPM ESTIMATED - 37.50 GPM | | | FITTING LOSS ACCOUNTED BY ADDING 10% TO FLOW SHOWN IN MANUF. NOZZLE CHART. |
| SERVICE | 2" | 0.34 | TYPE "K" COPPER 20 LN. FT. (36.00 GPM) |
| WATER METER | 1.5" | 2.10 | (36.00 GPM) |
| BALL VALVE | 1.5" | 1.00 | (36.00 GPM) |
| WYE FILTER | 1.5" | 0.30 | (36.00 GPM) |
| BACKFLOW PREVENTER | 1.5" | 4.00 | (36.00 GPM) |
| MASTER VALVE | 1.5" | 1.10 | (36.00 GPM) |
| MAIN LINE | 2" | 2.85 | 55 LN. FT. 36.00 GPM) |
| STATION VALVE (10) | 1.5" | 1.10 | 36.00 GPM |
| ZONE | | 2.15 | 36.00 GPM |
| CRITICAL HEAD 'A' | | 40.00 | |
| | | | |
| TOTAL LOSS | | 56.14 | |
| ASSUMED STATIC PRESSURE | | 65.00 | |
| PRESSURE DIFFERENTIAL | | -8.26 | |

N

0 10' 20'
SCALE IN FEET


STUDIO 13 DESIGN GROUP
Studio 13 Design Group, PLLC.
1740 Midway Rd.
Lewisville, Texas 75056
469-635-1900

FREESE NICHOLS
2220 San Jacinto Blvd., Suite 330
Denton, Texas 76205-7569
Phone - (940) 387-4600
Fax - (940) 387-4677


LEONARD W. REEVES 5085 REGISTERED LANDSCAPE ARCHITECT STATE OF TEXAS
January 21, 2011

TOWN OF ADDISON, TEXAS
SURVEYOR 1.5 MG EST.
IRRIGATION PLAN

| NO. | ISSUE | BY | DATE |
|---|---|---|---|
| 1 | REVISED PER TOWN OF ADDISON COMMENTS | CJ | 1-10-11 |

F&N JOB NO. ADD08459
DATE 01/21/11
DESIGNED LWR
DRAWN LWR
REVISED LWR
CHECKED LWR
FILE NAME FN1002-IR.dwg

VERIFY SCALE Bar is one inch on original drawing. If not one inch on this sheet, adjust scale.
0 1"

SHEET IR-1

Date: Jan 18, 2011 - 1:18pm User: lreeves File: S:\Projects\FN1002\DWG\FN1002-IR.dwg

# Town of Addison Irrigation Specifications

**Revised 04/29/10**

These revised specifications supersede any and all others. However, any discrepancies between the approved construction plans and those of the Town **MUST** be brought to the attention of the Town's designated representative for a final determination. The contractor will present the Town's representative an as-built plan at the final walk-through, along with three Bucker VO75 quick coupling keys with hose-end swivels.

**1.** All work is to be accomplished by or directly supervised at all times by an on-site Irrigator licensed by the State of Texas.

**2.** The contractor shall verify the water pressure before the installation begins. If the static pressure is different than that of the design pressure, contact the designer and Town's representative immediately so changes can be made. Send a fax to the Parks dept. at 972-450-2834 with the current dated and timed static pressure reading. Design head to head with no single head coverage. Use appropriate size nozzles for a given landscape area so as not to spray onto or over paved surfaces or structures. Do not exceed manufacturer's recommendations.

**3.** The irrigation installer is responsible for resetting head and/or box height due to settling and after turf, groundcover, shrubs, trees, and mulch is added to the landscape areas. The irrigation contractor must supply a workmanship warranty for (1) year from date of acceptance.

**4.** Plans are diagrammatic and field adjustments are often necessary. For this reason, prior to trenching, valve locations and head layout with flags needs to be done and approved by the Town's irrigation inspector. Not doing so may result in the relocation of heads and/or valves at the irrigation contractor's expense.

**5. Water Taps**: Water taps will be 2" in size. **Note**: This does not imply that a 2" meter will be used; see Water Meters below. All parts must conform to the Town of Addison Water Department specifications and are the responsibility of the irritation contractor to provide. Inspection of taps by the Water Department Representative must occur. Excavation and tap permits are required. Contact the Town of Addison Water Department at (972) 450-2871.



**6. Water Meters**: Only meter types approved by the Town of Addison Water Department with an electronic encoder register and touch pad reader and two (2) brass flanges are acceptable. Meter lay lengths must be in accordance with the Town of Addison Water Department's specifications, housed in appropriate size (to be determined by the Town's Irrigation Inspector) concrete box with lid. New stainless steel bolts and nuts must be used in the installation along with new neoprene gaskets. The box should be level with the final grade using concrete pavers to support and prevent sinking. Backfill inside the box, 3" below meter base with at least 6" of fine (1/2") pea gravel. Connection to main must be approved and inspected by the Town's Water Department Inspector and all tap materials are to be purchased at the expense of the contractor and must comply with the Town of Addison's specifications.
**Note**: Meter size shall not exceed 1 ½" in size unless written approval is given by the Town of Addison Parks Department. All portions of this installation must adhere to the Town of Addison Water Department specifications as well.

**7. Backflow Devices**: Only Watts 007 M series inline check valve assemblies with the stainless steel ball valve handles and nuts are to be used. Irrigation contractor shall provide and install plugs for the test cocks in accordance to the Town of Addison Water Department specifications. Connect the device to the water meter via a separate brass flange, neoprene gasket and stainless steel nuts and bolts. Install to the flange a Teflon taped copper nipple and soldered copper pipe of sufficient length to center the DCA within its housing. The device will be housed in an appropriate size, (to be determined by the Town's Irrigation Inspector) rectangular concrete box with lid using concrete pavers for proper stability and height adjustment. The irrigation contractor shall be responsible for the DCA testing in accordance with State of Texas law, using a Licensed Backflow Assembly Tester registered with the Town of Addison Water Department. Copies of the results must to given to both the Town of Addison Parks and Water Departments.
**Note**: All portions of this installation must adhere to the Town of Addison Water Department specifications as well.

**8. Sleeves**: All paving must have Town approved sleeve sizes and quantities present. It is the responsibility of the irrigation contractor to notify the Town's Irrigation Inspector of any area where sleeves should be present but are not and provide such materials at his cost. Any paving installed without sleeves will necessitate a bore and subsequent



materials at the irrigation contractor's expense. All sleeves 2" and smaller will be Schedule 40 PVC with size and location noted on the plan. Larger sizes will be Class 200. All piping underneath paving, including sidewalks, must be sleeved. All sleeves are to be belled end PVC pipe. A minimum length of 12 inches of sleeve material must extend beyond the pavement.

**9. Glue and Primer**: Use Turftite brand glue on laterals and IPS Grey Heavy Body on main lines and a good quality purple primer on all. Avoid excessive use and wipe excess glue off of all joints and fittings with a clean rag.

**10. Pipe**: All main line pipe 2 inches and smaller is to be Schedule 40 belled PVC; larger sizes are to be Class 200 belled PVC with a minimum depth of 14" and a maximum depth of 16". Put not more than two (2) pipes in any one trench and separate the main line from the lateral line with at least two (2) inch of cover. Class 200 belled PVC lateral piping is to be used with a minimum depth of 12" and a maximum depth of 14".

**11. Fittings**: No crosses are permitted. Separate tees, 45's, elbows and other fittings by at least 12 inches. Reduction tees are preferred over use of single reducer bushings. Multiple reducer bushings will not be accepted. Only Spears and/or Lasco fittings are permitted. Allow 18 inches outside of sleeve before the first fitting. No 45 degree elbows on 1 inch and larger pipe are allowed.

**12. Valves**:

**A. Master Valves**: Every point of connection to the water supply system shall have an Irritrol 200 B series valve as the Master Valve, housed in a standard (large) Armor rectangular plastic valve box with 4 to 6 inches of small (1/2") pea gravel placed underneath the valve in such a manner as to prevent soil infiltration into the box. Use concrete pavers or bricks placed under edges of valve box for stability. Note: Valve box must not rest on pipe. Blue wire shall be used as the station wire for the Master Valve.

**B. Station Valves**: Only Irritrol 200 B series valves are permitted. A Ball Valve will be installed before every station or zone valve. They are to be located within a standard (large) Armor rectangular plastic valve boxes with 4 to 6 inches of (1/2") pea gravel placed underneath the valve in such a manner as to prevent soil infiltration into the box. The pea gravel should



be 2 inches from the bottom of the valve body. A minimum of 3" of valve box must extend below bottom of valve. If necessary, use valve box extensions.

**C. Ball Valves**: Female threaded plastic Spears or Lasco ball valves with positive T-handle cut off must be installed on every 200 feet of mainline for isolation purposes. A ball valve is also required to be installed before every station valves. Use 10" Armor valve box with a minimum of 3" extending below bottom of valve and fill to bottom of valve with ½" pea gravel. Use bricks or concrete box.

**D. Quick Coupler Valves**: Use only Buckner V075 single lug ¾" quick coupling valves with a metal top. They are to be connected to a threaded fitting. Teflon tape and appropriate length of gray schedule 80 nipples and schedule 40 fittings are to be used for the swing joint. Secure to 18 inch by ½ inch steel rebar with a stainless steel worm screw clamp. House QCV in a 10 inch round plastic Armor valve box. Install Spears ball valve prior to each QCV. Bricks or pavers need to be installed under edges of valve boxes for stability. Backfill bottom of box with ½" pea gravel half way up body of valve.

**E. Flowmeters**: Purchase from a Rain Master supplier and install appropriately sized Data Industrial flowmeter. Follow all installation instructions as approved by Rain Master. House in a standard (large) Armor rectangular plastic valve box with 4 to 6 inches of small (1/2") pea gravel placed underneath the valve in such a manner as to prevent soil infiltration into the box. Use concrete pavers or bricks placed under edges of valve box for stability. Note: Valve box must not rest on pipe. The irrigation contractor must also purchase from Rain Master and install shielded Rain Master EV-Cab-Sen flow meter cable and install within continuous ¾" or larger gray PVC conduit with 6 inch or larger J-boxes placed every 200 feet or where 360 degrees of fittings are installed; only sweep fittings are permitted. Only a continuous run of cable is allowed; no splices will be allowed except at the point of connection to the flow meter. Connections at the flow meter must first be soldered and then water proofed within a 3-M DBY connector. Note: Certain Rain Master requirements must also be met regarding installation order and distances of separation between DCA, flow meter, master valve and the first fitting. It is the responsibility of the irrigation contractor to adhere to these requirements. At final walk



through, proper operation of the flow meter at the Rain Master controller must be demonstrated by the irrigation contractor.

**13. Heads**: All heads will be installed using polyethylene green nipples (¾"x6" for rotors and ½"x6" for pop-ups) screwed into threaded fittings unless noted otherwise. No swing joints on 4" pop-ups or rotors will be allowed.

**A. Pop-ups** – Only Rainbird 1800 series are permitted. Install ¾ inch above the finished grade.

**a. 4 inch pop-ups**: turf, tree bubblers within turf areas (use Hunter PCN 10 bubbler nozzles on spray heads.

**b. 6 inch pop-ups** with no side inlet: very low ground cover (less than 6 inches at mature height).

**c.12 inch pop-ups** with side inlet: Ground cover and low growing shrubs. The ground cover and shrubs should not be more than 12" at maturity. The Town Inspector reserves the right to determine if and when side inlets installed using funny pipe verses the bottom inlet will be allowed. When authorized, use Hardie Blue Line Pipe with Toro barb fittings.

**B. Bubblers** - Use ½" Schedule 80 risers with shrub adapter and Hunter PCN 10, 1 gpm, bubbler nozzles for all tree wells with tree grates. Risers shall be a minimum of 2" below bottom of tree grates with nozzle 2" above mulch. Use (2) bubblers 180-degree opposed.

**C. Rotors** - Only Hunter I-20 Series are permitted, unless noted otherwise. Install ¾" above finished grade.

**14. Drip:** *Use Netafim products only*. Use 0.9 gph pressure compensated self flushing dripper tubing with 12" emitter spacing. Install appropriate pressure reducer and filter in one standard rectangular plastic valve box and a ball valve (see Section 12 C) and station valve (see Section 12 B) in another standard rectangular plastic valve box. Use 17 mm Netafim barbed fittings. Secure tubing to the ground every 3' or less with heavy duty jute netting pins. Use air relief valves housed in 10" round valve boxes. Use Netafim indicator flags. Adhere to all Netafim design and installation specifications.



**15. Risers**: Use Sch 80 PVC with Weathermatic LXS Series shrub head adapters with a ½"x6" green poly cut-off nipple screwed into the threaded fitting in the ground. The irrigation inspector reserves the right to determine placement of risers versus pop-ups.

**16. Wiring**: All wires will be 14 gauge UF. Station wires will be red. Common wires will be white. Master valve wire will be blue. Anytime the wiring changes direction, such as at an elbow or a tee, allow a loop of at least 12 inches alongside the fitting at that location. Only continuous wire runs are permissible. Wire should follow the main line where possible and lay along a single side not crossing over lateral lines. Wire is to be placed under mainline with 2" of dirt between wire and pipe.

**17. Wire Connectors**: Use only DBY connectors for all field wire splices other than at the valves themselves. Allow at least 36 inches of pigtailed wire at each splice. Use King One Step tan colored connectors for all valve splices. All valve box splices are to be housed in standard (large) Armor rectangular plastic valve boxes. All field splices are to be in 10 inch round Ametek plastic valve boxes or standard, large rectangular Ametek plastic valve boxes at the discretion of the Town's representative.

**18. Backfilling**: Prior to any backfilling of trenches, an inspection by the Town's irrigation representative must take place and any necessary changes implemented; otherwise manual excavation to enable proper inspection will be necessary. Use clean and approved topsoil to backfill all pipe to a depth. All heads and boxes are to be backfilled to grade with clean topsoil. No rocks greater than 1 inch are allowed. Compact trenches to alleviate settling. Minimal depth of coverage is 12 inches.

**19.** Valve sequencing must be performed by the contractor and in an order approved by the Town Irrigation Inspector. At least 12 inches of extra station wiring within the bottom of the pedestal is necessary for each zone and must be of neat and orderly appearance.

**20.** Any deficiencies in coverage noted by the Town's irrigation inspector will be rectified at the cost of the contractor.

**21. Controller**: A Town irrigation representative will determine the type of controller to be used. All controllers shall have a concrete pad of 36"x36"x6". Pad will be set at 3" above final grade. Install the



controller after the concrete pad is completely cured (two days). Use only appropriately sized stainless steel bolts, washers and nuts to secure the controller to the concrete pad. All wiring is to enter the pedestal via appropriately sized PVC sweep elbows extending at least 1" thru and 6" out from under the pad. Control/master valve wiring, flow meter wiring and 120-V service wiring are to be separated with each having its own access elbow. An additional spare ¾" sweep elbow for phone service is to be installed as well. All national and local codes must be followed during the installation.

**A. A/C controller** - Only Irritrol MC Plus controllers will be acceptable. Both Mini-click rain and freeze sensors will be installed and placed where they can operate properly. All non-Rain Master controllers must be permanently wired for quick attachment to a Rain Master remote control unit.

**B. Battery and/or Solar Operated Controllers** - Only LEIT controllers will be acceptable. Install rain or freeze sensors on these controllers with SKIT8821-4 installation kit. Install on galvanized thick wall poles and set controller panel to height above finished grade to be determined by Town's representative.

**C. Rain Master**: Only an approved size stainless steel Rain Master Evolution DX-2 controller with a Stainless Steel Pedestal and Heavy Duty Lightning/Surge Protection is permitted. The controller must include all necessary hardware to ensure reliable communication and operation with the Town's central control located at 16801 Westgrove. Installation must include the following Rain Master hardware, purchased only from a certified Rain Master supplier: DX-FLOW sensor board, DX-PH phone communication option, Data Industrial flow meter (same size as the mainline), and shielded EV-CAB-SEN flow meter cable. It is the irrigation contractor's responsibility to entail the cost of and work in conjunction with South Western Bell Telephone to establish a dedicated phone service and install an interface within the pedestal at each controller location via direct burial cable within 1" PVC conduit. The entire installation must conform to Rain Master specifications and be approved by the Town's irrigation inspector prior to and be inspected during installation. Such specifications will include grounding and pad configurations and distances of separation from water meter to DCA to master valve to flow meter and the first fitting. A functional Mini-click freeze and rain sensor with a Hunter bypass switch must be installed in an approved location and by an approved method.



For part numbers and pricing of any Rain Master equipment, contact Ray Schramm of John Deere Landscapes at (214) 347-3628. For technical questions, call John DuBose of RainMaster at (214) 632-2289.

**22.** Communication is the key. **If you are unsure, CALL** Ron Lee, the Operations Manager of the Addison Parks Department: Office (972) 450-2863/Cell (972) 672-1817.



STATE OF TEXAS LEONARD W. REEVES 5085 REGISTERED LANDSCAPE ARCHITECT
January 21, 2011

STUDIO 13 DESIGN GROUP
Studio 13 Design Group, P.L.L.C.
13140 Coit Road, Suite 330
Farmers Branch, Texas 75244
469.635-1900

FREESE NICHOLS
2220 San Jacinto Blvd., Suite 330
Denton, Texas 76205-7600
(940) 387-4677
Fax - (940) 387-4677

TOWN OF ADDISON, TEXAS
SURVEYOR 1.5 MG EST.
IRRIGATION SPECIFICATIONS

| NO. | ISSUE | BY | DATE |
|---|---|---|---|
| 1 | REVISED PER TOWN OF ADDISON COMMENTS | CJ | 1-10-11 |

FAN JOB NO. AD0084459
DATE 01/21/11
DESIGNED LWR
DRAWN LWR
REVISED LWR
CHECKED LWR
FILE NAME FNI002-IR.dwg

VERIFY SCALE Bar is one inch on original drawing. If not one inch on this sheet, adjust scale.
0 1"

SHEET IR-2

Date: Jan 18, 2011 – 1:20pm User: lreeves File: S:\Projects\FNI002\DWG\FNI002-IR.dwg

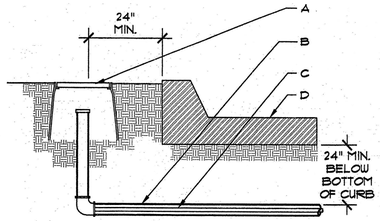


GENERAL NOTES:
1. NO DIRECT CONNECTION TO SLEEVE SHALL BE ALLOWED. SLEEVE SIZE SHALL BE TWO (2) SIZES LARGER THAN THE PIPE TO BE SLEEVED.
2. MARK HARDSCAPE WITH SYMBOL "S" TO INDICATE THAT A SLEEVE IS BELOW.
3. INSTALL WIRING IN SEPARATE SLEEVE FROM LATERAL AND MAINLINE PIPING.

CONSTRUCTION NOTES:
A. CONCRETE VALVE BOX. STUB UP SCH. 40 PVC SLEEVES AND CAP. PAINT TOP OF VALVE BOX "DAY GLOW ORANGE" FOR FUTURE REFERENCE.
B. SCH 40 PVC IRRIGATION SLEEVE - SEE PLAN.
C. PVC MAINLINE, LATERAL OR WIRING - SEE PLAN
D. PAVING

## 1 IRRIGATION SLEEVES
NOT TO SCALE

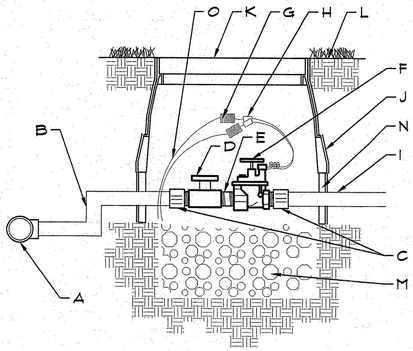


GENERAL NOTES:
1. INSTALL PEA GRAVEL FLUSH WITH BOTTOM OF PIPE AND VALVE.
2. MAINLINE SHALL HAVE A MINIMUM OF 18" COVER AND LATERAL LINE SHALL HAVE A MINIMUM OF 12" COVER.
3. PROVIDE A 24" WIRE EXPANSION COIL AT EACH DRY SPLICE WIRE CONNECTION.
4. CENTER VALVE ASSEMBLY IN VALVE BOX.

CONSTRUCTION NOTES:
A. PVC SERVICE TEE
B. SCH 40 90° BEND
C. SCH 40 MALE ADAPTER
D. SCH 40 BALL VALVE
E. GRAY SCH 80 SHORT NIPPLE (TBE)
F. AUTOMATIC VALVE
G. WIRE COIL
H. WATERPROOF WIRE CONNECTORS
I. LATERAL PIPE
J. 10 ML BLACK PLASTIC
K. ARMOR STANDARD RECTANGLE VALVE BOX WITH COVER AND PENTAGON LOCK. ROUT AND PAINT VALVE NUMBER ON TOP OF LID. SET ¼" ABOVE FINISH GRADE.
L. FINISH GRADE
M. WASHED PEA GRAVEL - 6" DEPTH MIN
N. 6" VALVE BOX EXTENSIONS AS REQUIRED
O. VALVE WIRING

## 2 ELECTRIC VALVE
NOT TO SCALE

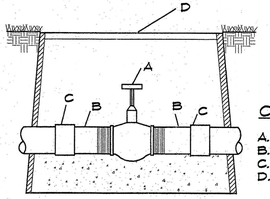


CONSTRUCTION NOTES:
A. BALL VALVE
B. SCH 80 TOE NIPPLE
C. COUPLING
D. 11x11 VALVE BOX

## 3 BALL VALVE
NOT TO SCALE

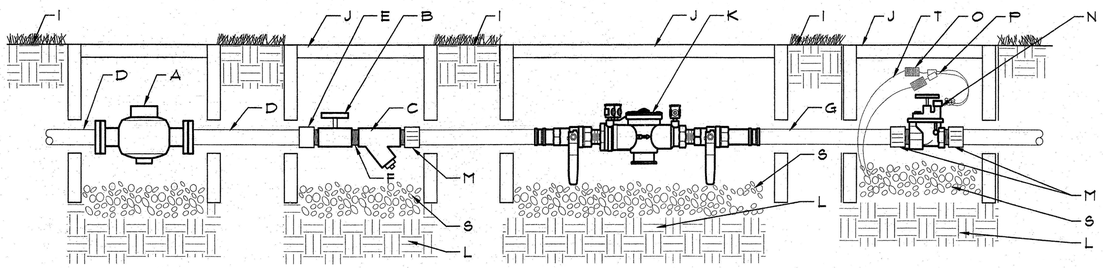


## 5 BACKFLOW PREVENTER CONNECTION
NOT TO SCALE

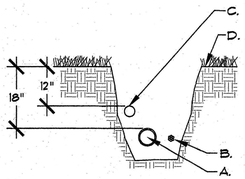


GENERAL NOTES:
1. REST PIPE FIRMLY ON TRENCH BOTTOM.
2. SNAKE PIPE FROM SIDE TO SIDE.
3. DO NOT STACK PIPE IN TRENCH. PROVIDE HORIZONTAL SEPARATION.
4. MAINTAIN 2" MINIMUM SEPARATION BETWEEN MAINLINE AND LATERAL LINE PIPING.
5. BUNDLE WIRE(S) AT 20 FT. INTERVALS.

CONSTRUCTION NOTES:
A. MAINLINE PIPING - 18" MINIMUM COVER
B. WIRE BUNDLE - TAPE PER SPECIFICATIONS
C. LATERAL LINE PIPING - 12" MINIMUM COVER
D. FINISH GRADE

## 4 IRRIGATION TRENCH
NOT TO SCALE

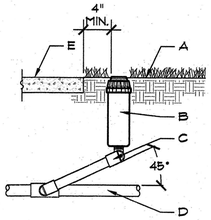


GENERAL NOTES:
1. SET TOP OF HEAD FLUSH WITH FINISH GRADE
2. FLUSH PIPING PRIOR TO INSTALLING NOZZLE
3. SET HEAD OFFSET OF LATERAL AND MAINLINE PIPING

CONSTRUCTION NOTES:
A. FINISH GRADE
B. ROTARY SPRAY HEAD
C. 3/4"x6" POLY NIPPLE
D. LATERAL PIPING
E. PAVING

## 6 ROTARY SPRAY HEAD
NOT TO SCALE

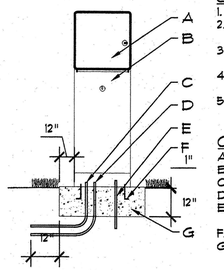


GENERAL NOTES:
1. INSTALL ELECTRICAL WIRING PER LOCAL CODES.
2. CONTRACTOR SHALL BE RESPONSIBLE FOR ALL ELECTRICAL WORK.
3. PROVIDE DRAINAGE AWAY FROM BASE OF PEDESTAL.
4. GROUND IRRIGATION BOXES WITH GROUNDING ROD PER N.E.C.
5. INSTALL WEATHER STATION TO NORTH SIDE OF CONTROLLER PEDESTAL W/ STAINLESS STEEL SCREWS

CONSTRUCTION NOTES:
A. CONTROLLER
B. PEDESTAL
C. ELECTRICAL SERVICE & PHONE LINE CONDUIT
D. REMOTE CONTROL VALVE WIRING CONDUIT
E. GROUNDING ROD(S) PER MANUFACTURER'S REQUIREMENTS
F. ANCHOR BOLTS
G. CONCRETE BASE, 3,000 PSI

## 7 PEDESTAL MOUNTED CONTROLLER
NOT TO SCALE

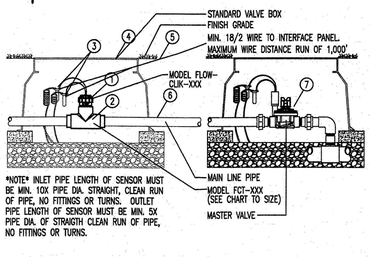


1. MODEL FLOW-CLIK-XXX
2. MODEL FCT-XXX (SEE CHART TO SIZE)
3. MIN. 18/2 WIRE TO INTERFACE PANEL. MAXIMUM WIRE DISTANCE RUN OF 1,000'
4. STANDARD VALVE BOX
5. FINISH GRADE
6. MAIN LINE PIPE
7. MASTER VALVE

FCT FITTING SELECTION

| | | |
|---|---|---|
| FCT100 | 1 INCH | SCH. 40 |
| FCT150 | 1.5 INCH | SCH. 40 |
| FCT158 | 1.5 INCH | SCH. 80 |
| FCT200 | 2 INCH | SCH. 40 |
| FCT208 | 2 INCH | SCH. 80 |
| FCT300 | 3 INCH | SCH. 40 |
| FCT308 | 3 INCH | SCH. 80 |
| FCT400 | 4 INCH | SCH. 40 |

## 8 FLOW METER
NOT TO SCALE

GENERAL NOTES:
1. INSTALL WASHED PEA GRAVEL BELOW DCA TO ALLOW ACCESS TO TEST COCKS AND OPERATION OF BALL VALVES
2. INSTALL PEA GRAVEL FLUSH WITH ELECTRIC VALVE.
3. PROVIDE A 24" WIRE EXPANSION COIL AT EACH DRY SPLICE WIRE CONNECTION.
4. CENTER VALVE ASSEMBLY IN VALVE BOX.

CONSTRUCTION NOTES:
A. WATER METER (SIZE PER PLAN)
B. BALL VALVE (SIZE PER LINE)
C. WYE STRAINER (SIZE PER LINE)
D. TYPE "K" COPPER PIPE
E. COPPER SxT COUPLING
F. TBE NIPPLE
G. PIPE PER CITY CODE
H. COUPLING
I. FINISH GRADE
J. 12"x11" VALVE BOX. SET 1/4" ABOVE FINISH GRADE
K. DOUBLE CHECK VALVE ASSEMBLY
L. COMPACTED SUBGRADE
M. MALE ADAPTER
N. MASTER ELECTRIC VALVE
O. WIRE COIL
P. WATERPROOF WIRE CONNECTORS
Q. NOT SHOWN ON DETAIL
R. STANDARD RECTANGLE VALVE BOX. SET ¼" ABOVE FINISH GRADE.
S. WASHED PEA GRAVEL - 6" DEPTH MIN
T. VALVE WIRING




## 5 BACKFLOW PREVENTER CONNECTION
NOT TO SCALE

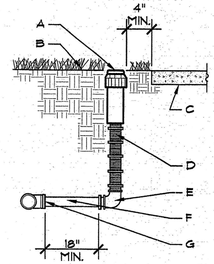


GENERAL NOTES:
SET TOP OF HEAD FLUSH WITH FINISH GRADE.

CONSTRUCTION NOTES:
A. SPRINKLER HEAD (SEE PLAN)
B. FINISH GRADE
C. PAVING
D. CUT OFF RISER
E. SCH 40 PVC THREADED ELL. (SXT)
F. LATERAL PIPE.
G. SCH 40 PVC TEE.

## 9 LAWN SPRAY HEAD
NOT TO SCALE

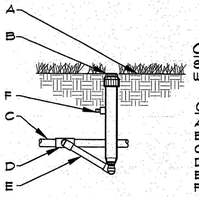


GENERAL NOTES:
SET TOP OF HEAD FLUSH WITH FINISH GRADE

CONSTRUCTION NOTES:
A. FINISH GRADE
B. SPRINKLER HEAD (SEE PLAN)
C. LATERAL PIPE
D. SCH 40 PVC TEE
E. FUNNY PIPE IS APPICABLE
F. PLUG

## 10 LAWN SPRAY HEAD
NOT TO SCALE

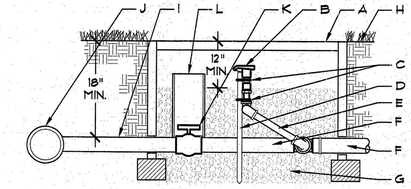


GENERAL NOTE:
1. INSTALL 8" X 8" X 16" CMU AROUND THE BASE OF EACH VALVE BOX.
2. INSTALL 1" DIA. WASHED AGGREGATE FLUSH WITH BOTTOM OF QUICK COUPLING VALVE

CONSTRUCTION NOTES:
A. NDS PRO SERIES VALVE BOX WITH OVERLAPPING COVER. ROUT AND PAINT VALVE NUMBER ON TOP OF LID. INSTALL FLUSH TO FINISHED GRADE.
B. QUICK COUPLING VALVE
C. TWO (2) STAINLESS STEEL WORM GEAR CLAMPS
D. 1" DIA. GALVANIZED STEEL PIPE, EXTEND 12" IN. INTO UNDISTURBED SOIL
E. PREASSEMBLIED UNITIZED 'O'-RING SWING JOINT ASSEMBLY
F. MAINLINE PIPING
G. WASHED AGGREGATE 12" DEEP MIN.
H. FINISH GRADE
I. MAIN-OFF SET LINE, SIZE PER QUICK COUPLER VALVE.
J. MAINLINE, SIZE PER TOTAL SITE.
K. BALL VALVE, SIZE PER QUICK COUPLER.
L. 4 in DIA. SLEEVE

## 11 QUICK COUPLING VALVE
NOT TO SCALE

IRRIGATION NOTES:
1. Provide a complete, functioning automatic irrigation system including labor, materials, fees, taxes, equipment, and other costs incidental to accomplishing work.
2. Acquire written approval from Landscape Architect or Licensed Irrigator for material substitutes prior to commencing the installation.
3. Locate existing underground utilities or obstacles prior to commencing installation. Repair damage to utilities or finishes resulting from work at no additional expense to Owner.
4. Piping is diagrammatic and shown for clarity only. Adjust as required for existing utilities, obstructions, tree root balls, etc.
5. Install work in accordance with applicable local codes and ordinances.
6. Coordinate sleeve and conduit requirements with General Contractor.
7. Locate each end of irrigation sleeves dimensionally on the Record "As Built" Drawings.
8. Irrigation Contractor shall be responsible for damage to plant material due to system failure from inferior workmanship during the installation of plants and maintenance period.
9. Extend one extra control wire to farthest valve, routed parallel to common ground wire with installation of lead and common wires.
10. Control wire shall be direct burial, 600 volt, single conductor, solid copper, plastic insulated cable, rated for direct burial applications, UF, UL, approved, 14 gauge minimum lead and common ground return wire unless noted otherwise. Color of insulation as follows:
11. Lead Wire: any color (same color), except white or orange
12. Common Ground Wire: white (color)
13. Extra Control Wire: orange (color)
14. All P.V.C. pressure main line and lateral lines shall receive as follows:
15. 18" minimum cover for main lines
16. 12" minimum cover for lateral lines
17. Make final electrical connection of controller per local electrical code. Provide all necessary fuse boxes, conduit, fittings, connectors or other electrical devices to make connection. Owner shall provide electrical service within 10 linear feet of controller location unless noted otherwise on drawings.
18. Connect remote sensors to controller with ground wire in series prior to connecting to remote control valves.
19. Owner or Landscape Architect shall determine final controller location.
20. All PVC pipe and fittings are to be primed with purple PVC primer solvent before applying PVC cement in accordance with the Uniform Plumbing Code.

STATE OF TEXAS · LEONARD W. REEVES · 5085 · LICENSED LANDSCAPE ARCHITECT
January 21, 2011

STUDIO 13 DESIGN GROUP
Studio 13 Design Group, PLLC.
1151 Eugene Street
Lewisville, Texas 75056
469.635-1900

FREESE NICHOLS
2220 San Jacinto Blvd., Suite 330
Denton, Texas 76205-4600
Tel - (940) 387-4600
Fax - (940) 387-4677

TOWN OF ADDISON, TEXAS
SURVEYOR 1.5 MG EST.
IRRIGATION DETAILS

| NO. | ISSUE | BY | DATE: | FNI JOB NO. ADD08459 |
|---|---|---|---|---|
| 1 | REVISED PER TOWN OF ADDISON COMMENTS | CJ | 1-10-11 | DATE 01/21/11 |
| | | | | DESIGNED LWR |
| | | | | DRAWN LWR |
| | | | | REVISED LWR |
| | | | | CHECKED LWR |
| | | | | FILE NAME FNI002-IR.dwg |

VERIFY SCALE Bar is one inch on original drawing. If not one inch on this sheet, adjust scale.
0 1"

SHEET IR-3

Date: Jan 18, 2011 - 1:21pm User: lreeves File: S:\Projects\FNI002\DWG\FNI002-IR.dwg

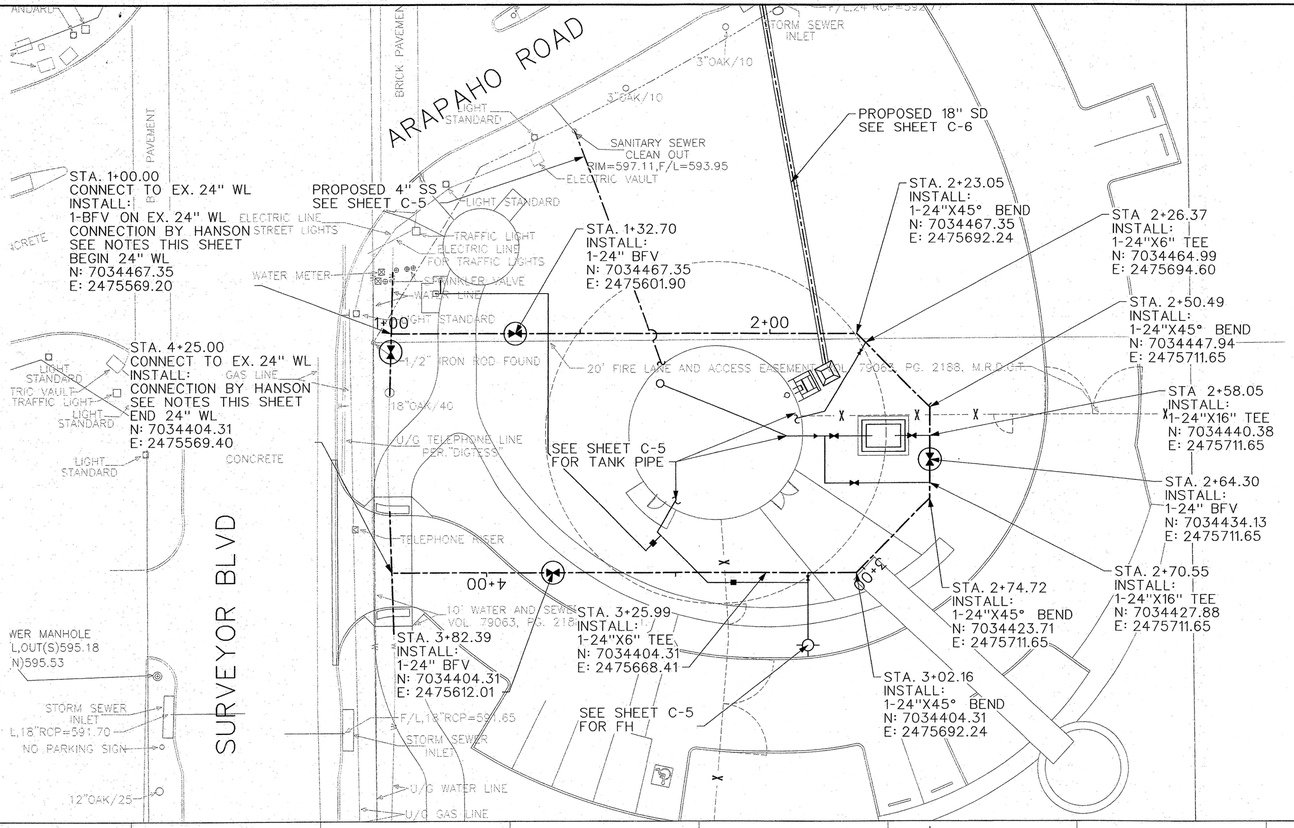


NOTES FOR CONNECTION TO EX. 24" WATER MAIN

1. AVAILABLE INFORMATION INDICATES EXISTING 24" MAIN IS AWWA C-303 PIPE. CONTRACTOR SHALL CONFIRM IN FIELD THE TYPE OF PIPE.
2. CONTRACTOR SHALL FIELD VERIFY LOCATIONS OF JOINTS ON EXISTING 24" WATER MAIN. EACH TIE-IN TO EXISTING 24" MAIN SHALL OCCUR AT ONE SEGMENTOF EXISTING PIPE. ADDITIONAL PROPOSED 24" DUCTILE IRON PIPING AND FITTINGS SHALL BE PROVIDED AS NEEDED TO LINE UP THOSE TIE-IN LOCATIONS, AND COST SHALL BE AT THE UNIT PRICE BID FOR EACH RESPECTIVE ITEM.
3. TIE-IN PIPE SEGMENTS AND FITTINGS SHALL BE MANUFACTURED BY HANSON, AND SHALL BE MINIMUM PRESSURE CLASS 200 PSIPLUS 100 PSISURGE ALLOWANCE.
4. CONTRACTOR SHALL PROTECT AND PRESERVE EXISTING 18" OAK TREE DURING CONNECTION.

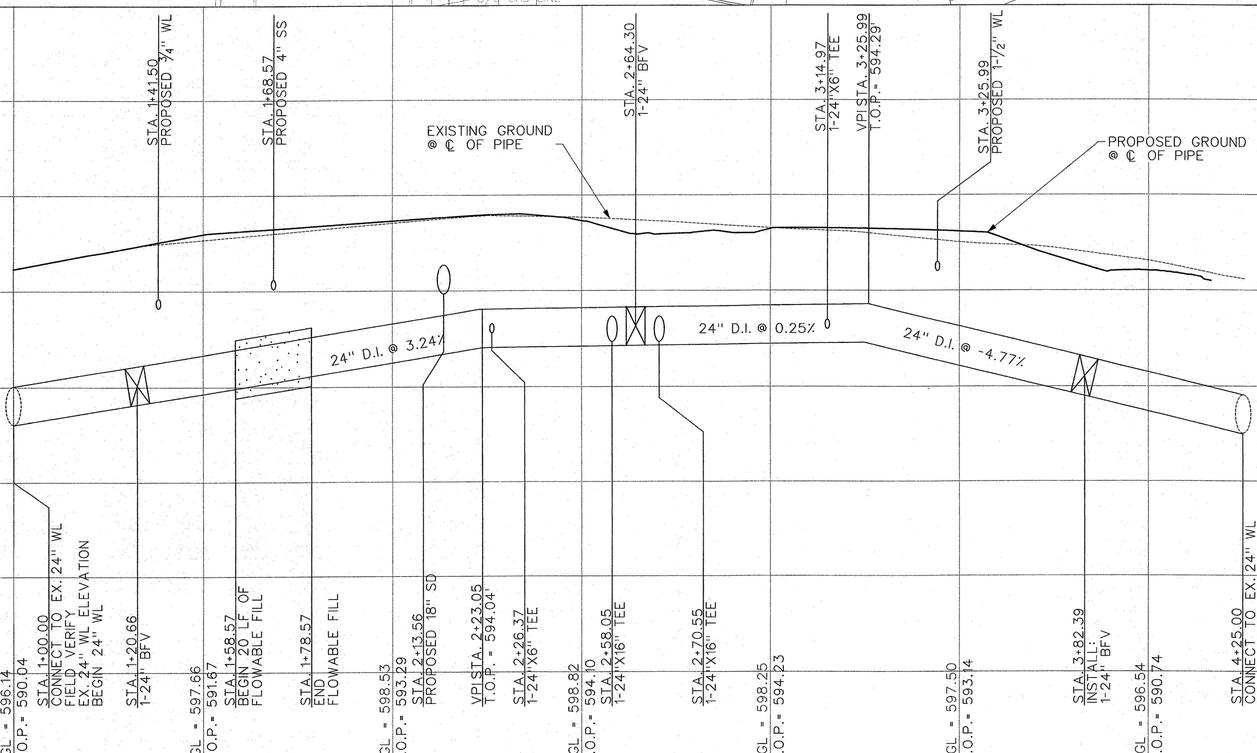


FREESE AND NICHOLS, INC.
TEXAS REGISTERED ENGINEERING FIRM F-2144

STATE OF TEXAS
ROBERT G. KAMM
81073
LICENSED
PROFESSIONAL ENGINEER
1-19-11

FREESE NICHOLS
2220 San Jacinto Blvd., Suite 330
Denton, Tx. 76205
Phone - (940) 387-4600
Fax - (940) 387-4677
Web - www.freese.com

TOWN OF ADDISON, TEXAS

SURVEYOR 1.5 MG EST

CIVIL

STA. 1+00 TO STA. 4+25.00
24" WATER LINE PLAN AND PROFILE

| NO. | ISSUES | BY | DATE |
|---|---|---|---|
| | | | |

F&N JOB NO. ADD08459
DATE 01/21/11
DESIGNED RGK
DRAWN RJS
REVISED
CHECKED
FILE NAME CV-EST-PP-WL01.SHT

VERIFY SCALE Bar is one inch on original drawing. If not one inch on this sheet, adjust scale.
0 1"

SHEET C-7

MicroStation V8 User: amr Office: Denton
ADD08459 ...\N\F\Drawings\CV-EST-PP-WL01.SHT
Plot Scale: 20.0000 '/ In Plot Style Table: ...
Date: 01\19\2011 - 01:25:31 PM Model: Default
Project: Freese and Nichols, Inc.-ubi-pr-st01.dgn

ADDISON-WATER TANK-4-5-10.dwg cv-ubi-pr-WL01.dgn
cv-ubi-pr-site01.dgn cv-ubi-pr-WL02.dgn
cv-ubi-pr-xsect.dgn cv-ubi-pr-WL03.dgn
34Border.dgn cv-ubi-pr-SSD01.dgn
cv-ubi-pr-st01.dgn

Office: Denton ADD08459 Date: 01\19\2011 - 01:25:31 PM User: amr File: N:\F\Drawings\CV-EST-PP-WL01.SHT

STA. 1+20.46
INSTALL:
RESTRAINED COUPLING GLAND
N: 7034440.38
E: 2475691.18

STA. 1+20.00, 12.50' LT
INSTALL:
1-16" GV
N: 7034427.88
E: 2475691.65

16" D.I. BY-PASS LINE

STA. 1+27.75, 12.50' LT
INSALL:
1-16"X90° BEND
N: 7034427.88
E: 2475683.90

PROPOSED ¾" WL
SEE SHEET C-5

STA. 1+04.67
INSTALL:
1-16" GV
N: 7034440.38
E: 2475706.98

STA. 1+00.00
CONNECT TO
PROPOSED 24" WL
SEE SHEET C-7
N: 7034440.38
E: 2475711.65

STA. 1+29.51
INSTALL:
1-24"X16" ECCENTRIC REDUCER
N: 7034440.38
E: 2475682.13

SEE SHEET DT-01 SECTION 4
FOR PIPING PROFILE @ PEDESTAL

SEE SHEET DT-04 FOR
VALVE & VAULT DETAIL

STA. 1+10.50
INSTALL:
1-16" ROMAC RFCA
30"-16" FLG X PE
N: 7034440.38
E: 2475701.15

STA. 1+25.33
INSTALL:
1-16" GV
N: 7034440.38
E: 2475686.31

STA. 1+37.81
INSTALL:
1-24"X45° BEND
N: 7034440.38
E: 2475673.84

STA 1+74.13
INLET/OULET
N: 7034454.33
E: 2475640.30

STA. 1+27.75
INSTALL:
1-16"X16" TEE
N: 7034440.38
E: 2475683.90

STA. 1+13.48
INSTALL:
1-16" CONTROL VALVE
CLA-VAL MODEL 136-03
SOLENOID CONTROL VALVE
W/O CHECK FEATURE
N: 7034440.38
E: 2475698.16

PROPOSED 6" WL
SEE SHEET C-5

PROPOSED 4" SS SERVICE LINE
SEE SHEETS C-5

N

1"=5'
HORIZONTAL

1"=2'
VERTICAL

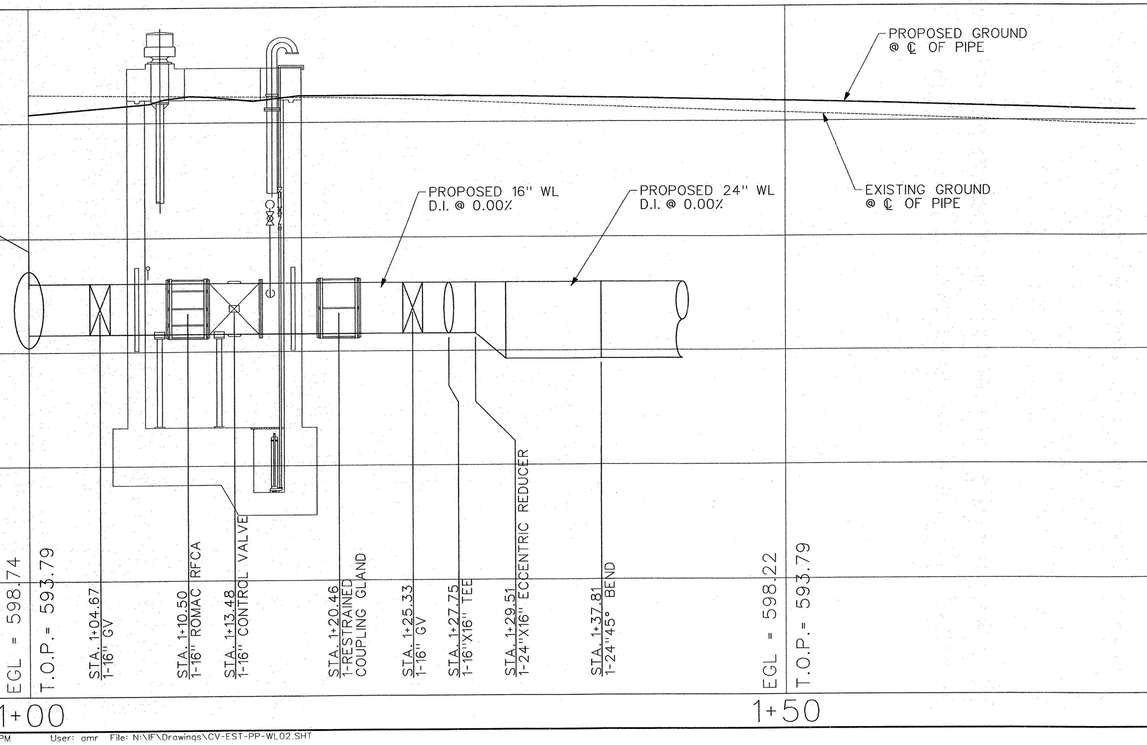


FREESE AND NICHOLS, INC.
TEXAS REGISTERED ENGINEERING FIRM F-2144

STATE OF TEXAS
RONALD G. KING
81073
LICENSED
PROFESSIONAL
ENGINEER
1-19-11

FREESE NICHOLS
2220 San Jacinto Blvd., Suite 330
Denton, Tx. 76205
Phone: (940) 387-4600
Fax: (940) 387-4677
Web - www.freese.com

TOWN OF ADDISON, TEXAS

SURVEYOR 1.5 MG EST

CIVIL

16" WATERLINE PLAN AND PROFILE

| NO. | ISSUES | BY | DATE |
|---|---|---|---|
| | | | |

F&N JOB NO. ADD08459
DATE 01/21/11
DESIGNED RGK
DRAWN RJS
REVISED
CHECKED
FILE NAME CV-EST-PP-WL02.SHT

VERIFY SCALE Bar is one inch on original drawing. If not one inch on this sheet, adjust scale.
0 1"

SHEET C-8

MicroStation V8 User: amr Office: Denton
ADD08459 - N:\IF\Drawings\CV-EST-PP-WL02.SHT
Level: Default Model: Default
Plot Scale: 5.0000 '/ in.
Date: 01\19\2011 - 01:27:10 PM
Project: Freese and Nichols, Inc.-ut-pl-sa-#701.dgn
cv-utl-pl-tank01.dgn
34Border.dgn
cv-utl-pr-WL01.dgn
cv-utl-pr-SS01.dgn
ADDISON-WATER TANK-4-5-10.dwg

Office: Denton ADD08459 Date: 01\19\2011 - 01:27:10 PM User: amr File: N:\IF\Drawings\CV-EST-PP-WL02.SHT

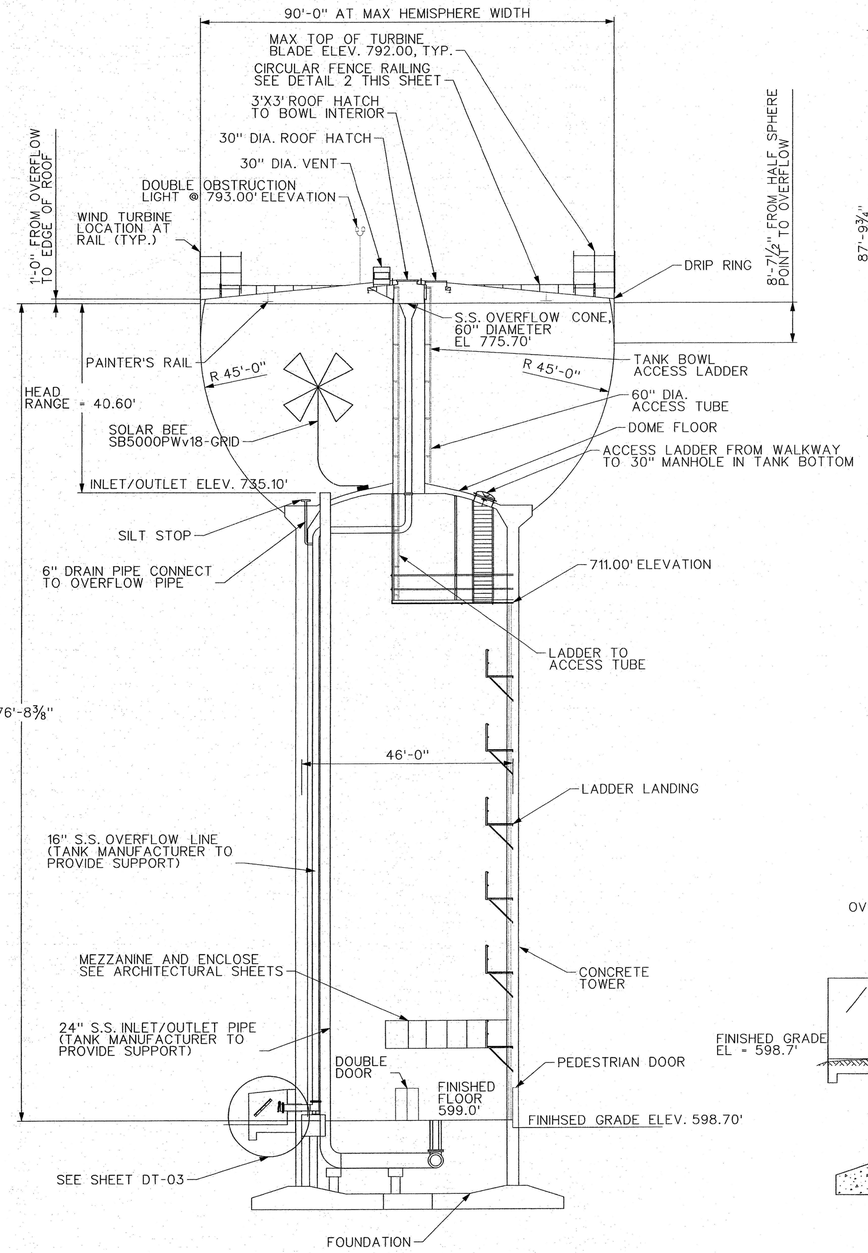


NOTES:

1. PROVIDE STEEL EYE-RINGS ON THE ROOF FOR LIFE-LINE CONNECTION WITHIN ARM LENGTH OF EACH ACCESS HATCH.

2. PEDESTAL WALL SHALL BE DESIGNED WITH ADEQUATE THICKNESS AND RE-INFORCEMENT TO ALLOW FOR FUTURE SECOND FLOOR STORAGE.

1 TANK ELEVATION
1/16" - 1'-0"

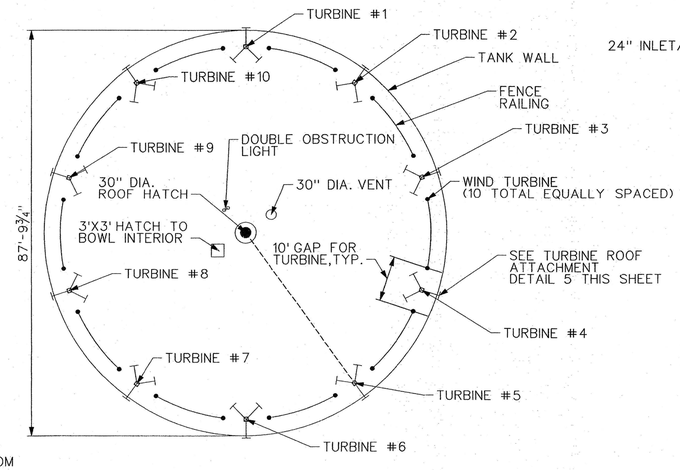


2 ROOF PLAN
1/16" - 1'-0"

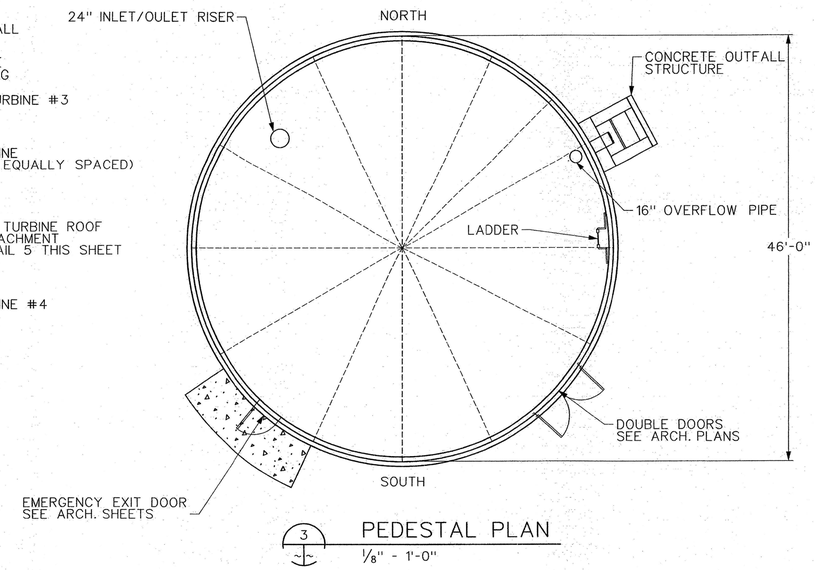


3 PEDESTAL PLAN
⅛" - 1'-0"

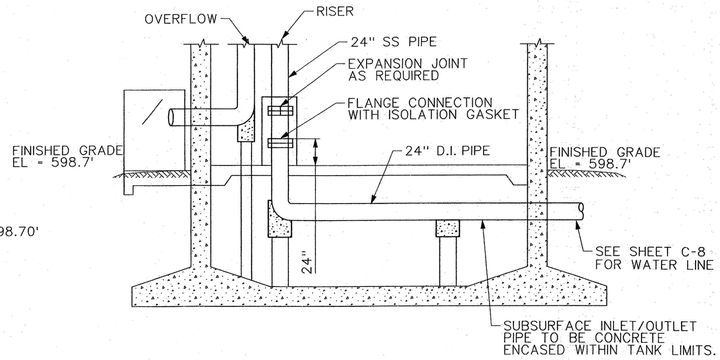


4 SECTION TANK PIPING
NOT TO SCALE

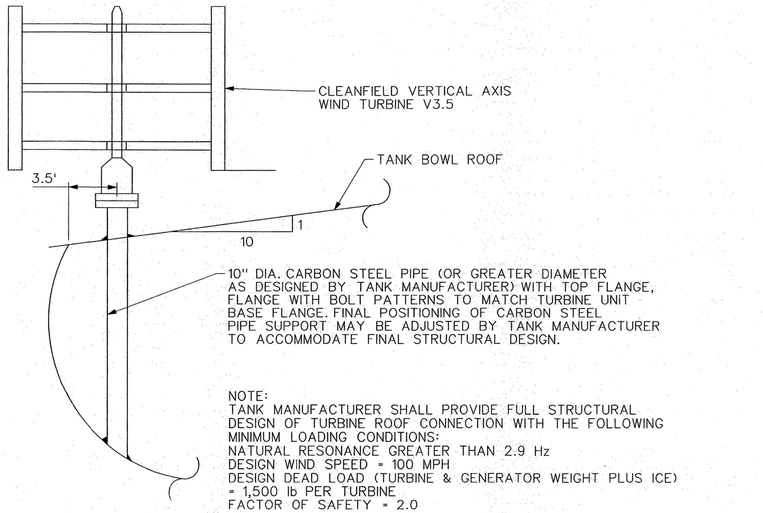


NOTE:
TANK MANUFACTURER SHALL PROVIDE FULL STRUCTURAL DESIGN OF TURBINE ROOF CONNECTION WITH THE FOLLOWING MINIMUM LOADING CONDITIONS:
NATURAL RESONANCE GREATER THAN 2.9 Hz
DESIGN WIND SPEED = 100 MPH
DESIGN DEAD LOAD (TURBINE & GENERATOR WEIGHT PLUS ICE) = 1,500 lb PER TURBINE
FACTOR OF SAFETY = 2.0

5 TURBINE ROOF CONNECTION DETAIL
NOT TO SCALE

8' 0 8' 16'
⅛"=1'-0"
16' 8' 0 16' 32'
1/16"=1'-0"

FREESE AND NICHOLS, INC.
TEXAS REGISTERED ENGINEERING FIRM F-2144
STATE OF TEXAS
RONALD G. KING
81073
LICENSED
PROFESSIONAL ENGINEER
1-19-11
FREESE NICHOLS
2220 San Jacinto Blvd., Suite 330
Denton, TX 76205
Phone - (940) 387-4600
Fax - (940) 387-4677
Web - www.freese.com

TOWN OF ADDISON, TEXAS
SURVEYOR 1.5 MG EST
CIVIL
TANK PLAN & ELEVATION

| NO. | ISSUES | BY | DATE |
|---|---|---|---|

| | |
|---|---|
| F&N JOB NO. | ADD08459 |
| DATE | 01/21/11 |
| DESIGNED | DAT |
| DRAWN | SB |
| REVISED | RJS |
| CHECKED | RGK |
| FILE NAME | CV-EST-DT-TYP01.sht |

VERIFY SCALE Bar is one inch on original drawing. If not one inch on this sheet, adjust scale.
0 1"

SHEET
DT-01

CV-EST-DT-TYP01.sht
CV-EST-DT-TYP01.sht
CV-EST-DT-TYP01.sht
CV-EST-DT-TYP01.sht
CV-EST-DT-TYP01.sht
CV-EST-DT-TYP01.sht
CV-EST-DT-TYP01.sht
34Border.dgn
MicroStation V8 User: amr Office: Denton
Model: N:\IF\Drawings\CV-EST-DT-TYP01.sht
Plotter: J:\pc\dr"_XM\Denton\11x17-Mono.plt
Plot Scale: 1.000000 Plot Offset
Date: 01\19\2011 - 01:29:34 PM Project: Freese and Nichols, Inc.

NOTE:

1. EACH EDGE OF RIBBINGS AND TERMINATION RING CONTACTING BOWL SHALL BE FULLY WELDED WATER TIGHT FOR FULL LENGTH.

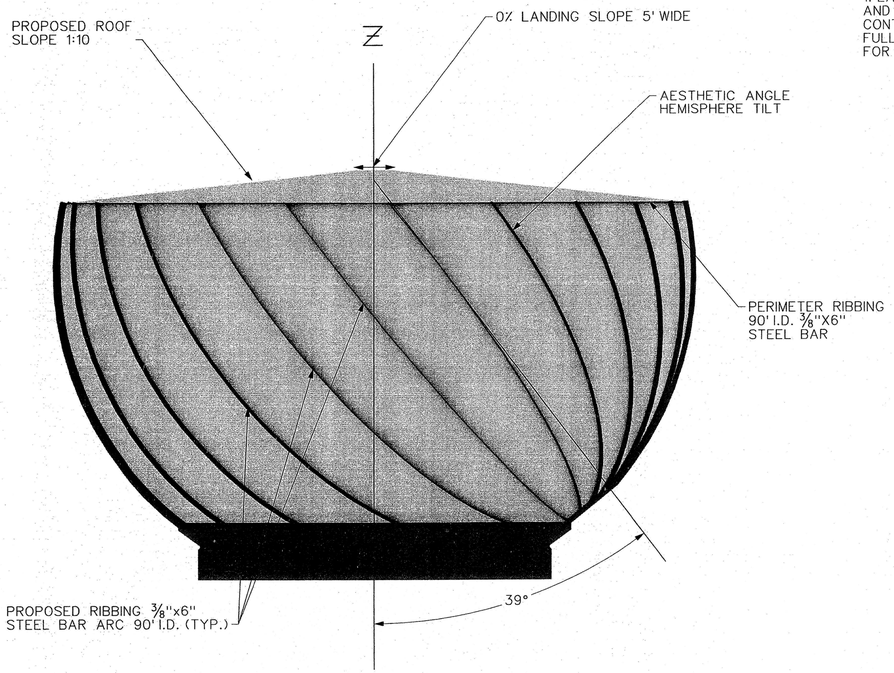


1 SIDE VIEW
NOT TO SCALE

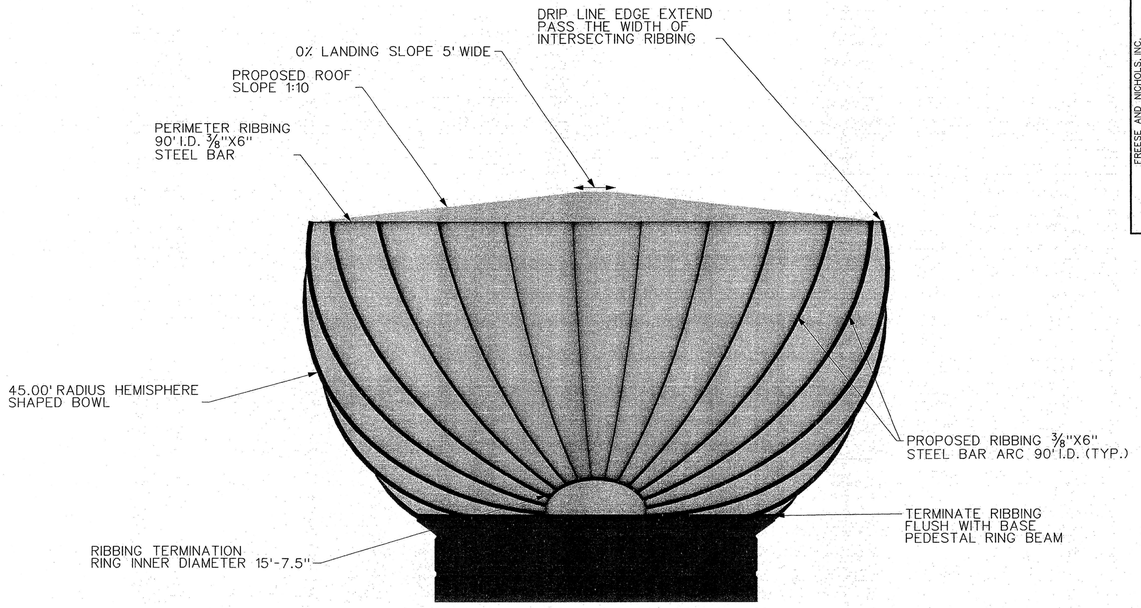


2 FRONT VIEW FACING INTERSECTION ARAPAHO/SURVERYOR
NOT TO SCALE

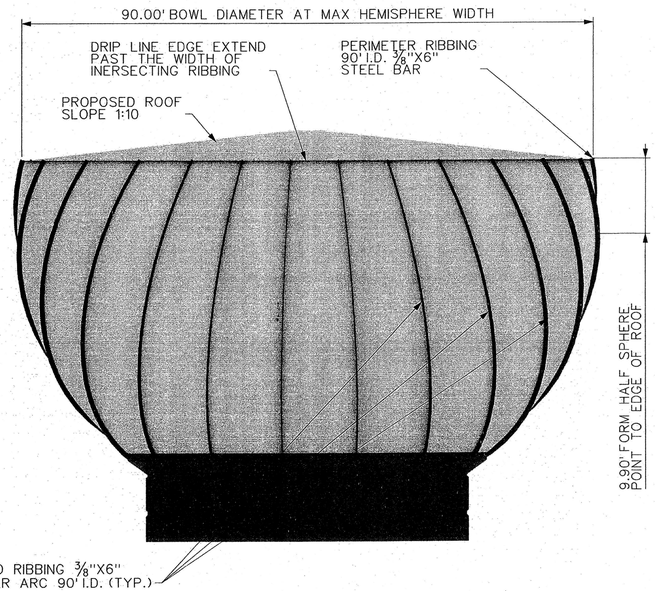


3 BACK VIEW
NOT TO SCALE

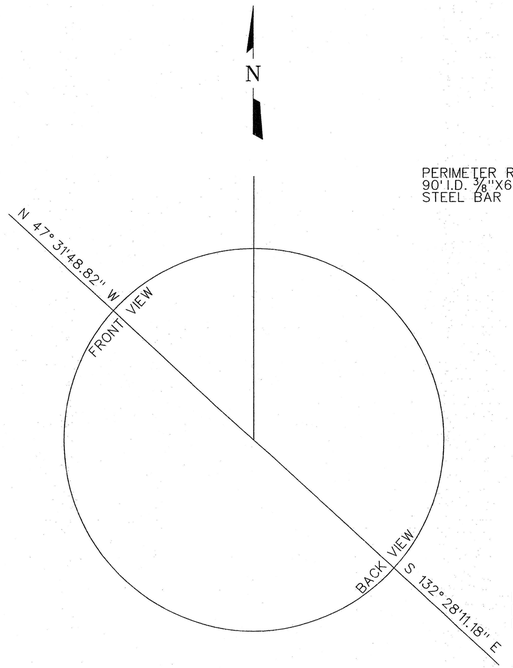


4 BOWL VIEW KEY MAP
NOT TO SCALE

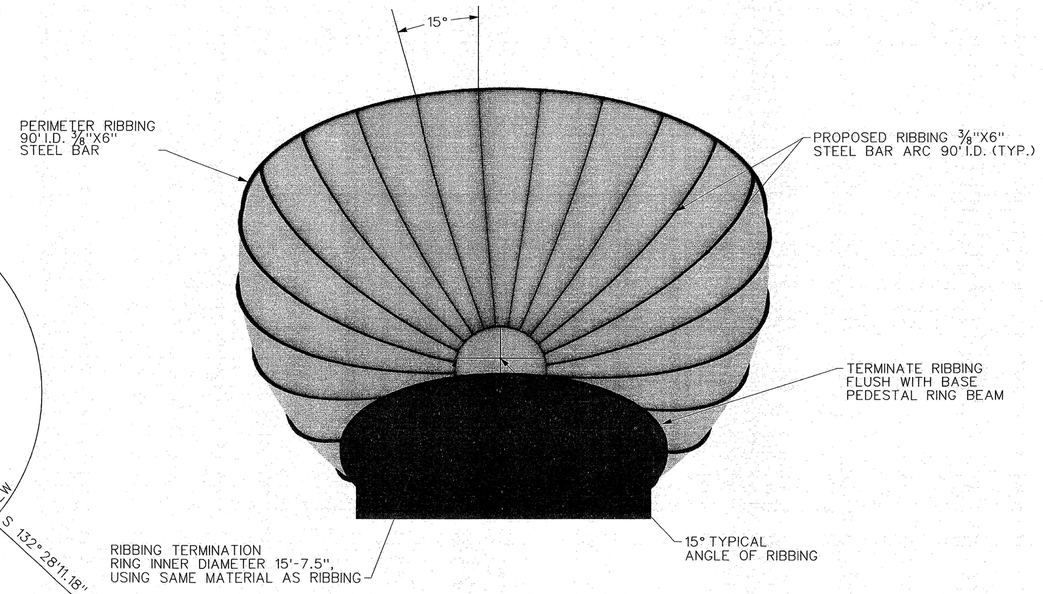


5 39° ANGLE FRONT VIEW
NOT TO SCALE


FREESE AND NICHOLS, INC.
TEXAS REGISTERED ENGINEERING FIRM F-2144
STATE OF TEXAS · 81073 · REGISTERED · LICENSED · PROFESSIONAL ENGINEER
1-19-11
Tara Bell Hay
FREESE NICHOLS
2220 San Jacinto Blvd., Suite 330
Denton, Tx. 76205
Phone - (940) 382-4600
Fax - (940) 382-4677
Web - www.freese.com


TOWN OF ADDISON, TEXAS
SURVEYOR 1.5 MG EST
CIVIL
TANK BOWL DETAIL

| NO. | ISSUES | BY | DATE |
|---|---|---|---|
| | | | |

FAN JOB NO. AD08459
DATE 01/21/11
DESIGNED DAT
DRAWN SB
REVISED RJS
CHECKED RGK
FILE NAME CV-EST-DT-TYP02.SHT

VERIFY SCALE Bar is one inch on original drawing. If not one inch on this sheet, adjust scale.
0 1"

SHEET DT-02


MicroStation V8 User: amr Office: Denton
AD08459 - N:\IF\Drawings\CV-EST-DT-TYP02.SHT
Model: Default Model Name: Default
Plot Scale: 10.0000 '/ In. Model: Default
Date: 01\19\2011 - 01:30:02 PM Project: Freese and Nichols, Inc.
34Border.dgn
TANKS.DGN

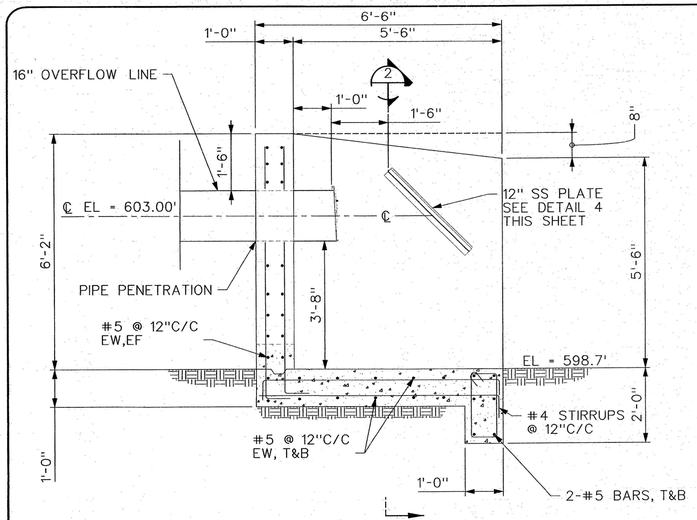


1 SECTION
½" = 1'-0"

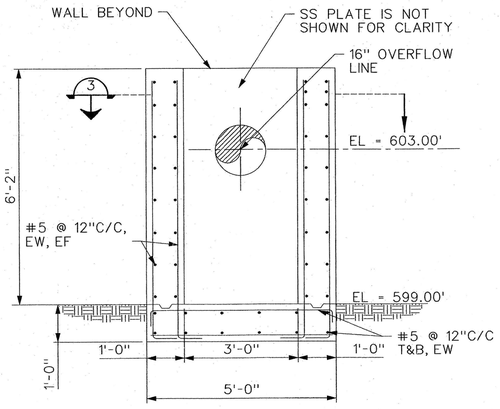


2 SECTION
½" = 1'-0"

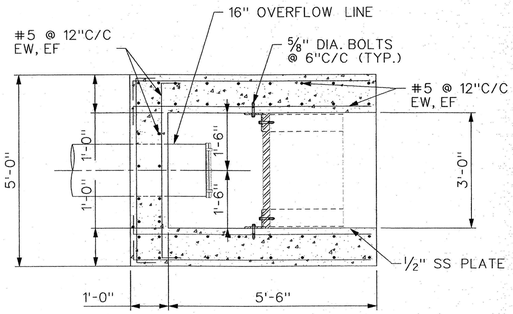


3 SECTION
½" = 1'-0"

* FLAP VALVE SHALL BE WATERMAIN MODEL F-55 DRAINAGE GATE. POSITIVE CLOSING OR APPROVED EQUAL.

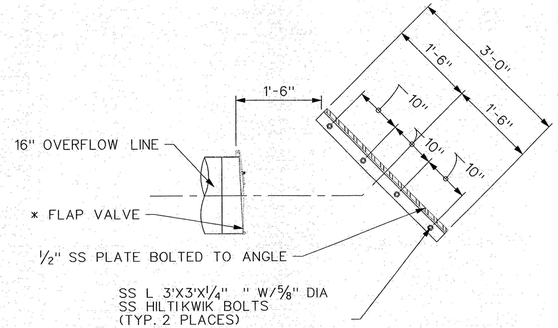


4 STAINLESS STEEL PLATE DETAIL
¾" = 1'-0"

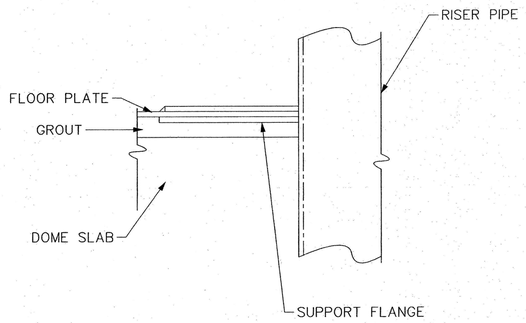


5 DETAIL "D"
NOT TO SCALE

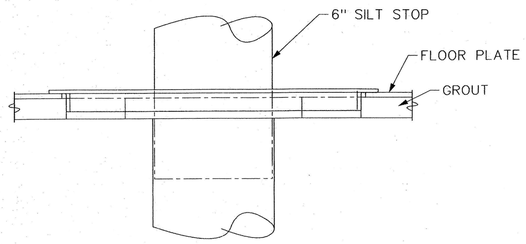


6 DETAIL "C"
NOT TO SCALE

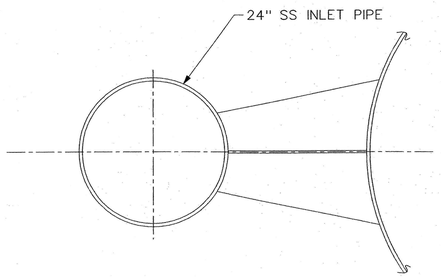


7 SECTION
NOT TO SCALE

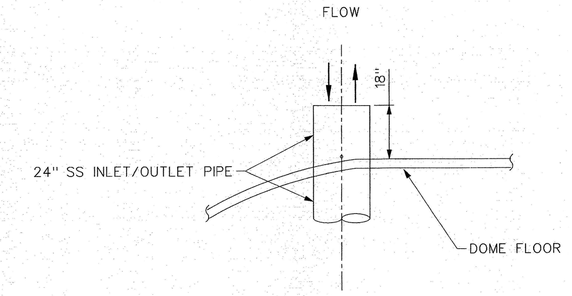


8 TANK INLET OUTLET DETAIL
NOT TO SCALE

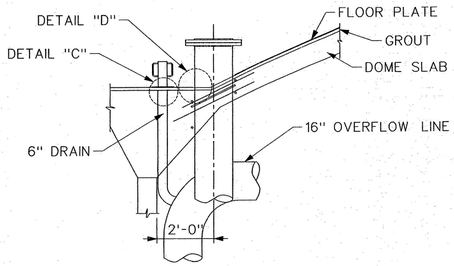


9 INLET/OUTLET RISER PIPE UPPER END DETAIL
⅜" = 1'-0"

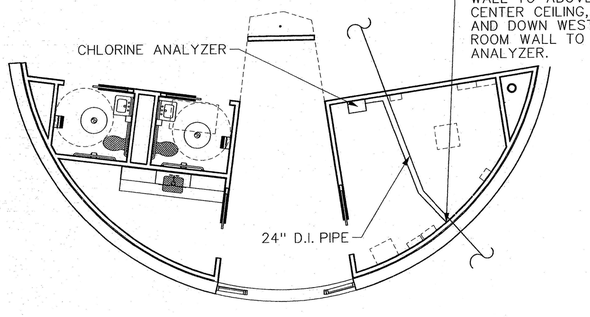


10 CHLORINE TAP
NOT TO SCALE

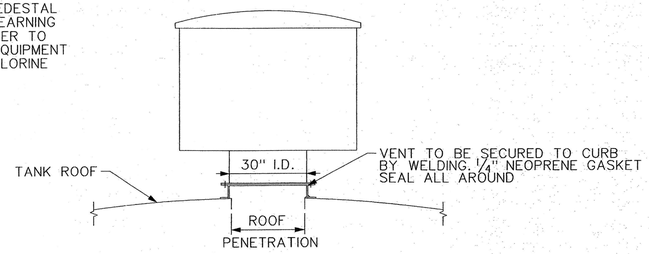


NOTE:

1. VENT DESIGN AND CONSTRUCTION SHALL BE AST MODEL VENT BY ADVANCE TANK AND CONSTRUCTION CO.
2. VENT SHALL BE ALUMINUM WITH S.S. HARDWARE.
3. VENT SHALL HAVE LOCKING MECHANISM TO PREVENT ACCESS TO TANK.
4. VENT SHALL BE SCREENED WITH #16 S.S. MESH.

11 30" VENT
NOT TO SCALE

VERIFY SCALE Bar is one inch on original drawing. If not one inch on this sheet, adjust scale.

4' 0 4'
⅜"=1'-0

1' 0 1' 2' 3'
¾"=1'-0"

1' 0 1' 2' 5'
½"=1'-0"

FREESE AND NICHOLS, INC.
TEXAS REGISTERED ENGINEERING FIRM F-2144

STATE OF TEXAS
RONALD G. KING
81073
LICENSED
PROFESSIONAL ENGINEER
1-19-11

FREESE NICHOLS
2220 San Jacinto Blvd., Suite 330
Denton, Tx. 76205
Phone: (940) 382-4600
Fax: (940) 387-4677
Web - www.freese.com

TOWN OF ADDISON, TEXAS

SURVEYOR 1.5 MG EST

CIVIL

TANK DETAILS

| NO. | ISSUES | BY | DATE |
|---|---|---|---|

FAN JOB NO. ADD08459
DATE 01/21/11
DESIGNED DAT
DRAWN SB
REVISED RJS
CHECKED RGK
FILE NAME CV-EST-DT-TYP03.SHT

SHEET
DT-03

CV-EST-DT-TYP03.SHT
CV-EST-DT-TYP03.SHT
CV-EST-DT-TYP03.SHT
CV-EST-DT-TYP03.SHT
CV-EST-DT-TYP03.SHT
CV-EST-DT-TYP03.SHT

CV-EST-DT-TYP03.SHT

MicroStation V8 User: amr Officet: Denton
ADD08459 N:\IF\Drawings\CV-EST-DT-TYP03.SHT
Plot Scale: 0.1111' = 1.0000' Plot Driver: HP.pltcfg
Date: 01\19\2011 - 01:58:33 PM Model: Sheet
Project: Freese and Nichols, Inc.

34Border.dgn

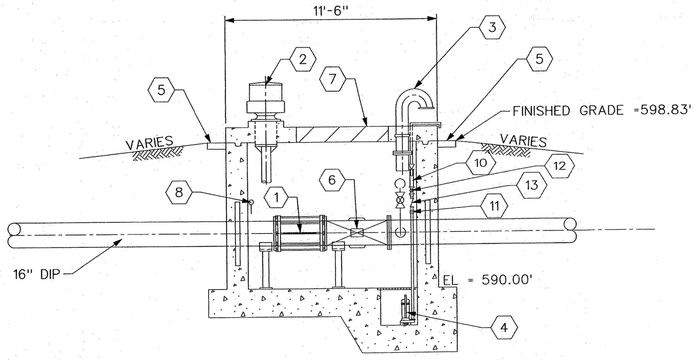


1 FLOW CONTROL VALVE VAULT ELEVATION VIEW

1/4" = 1'-0"

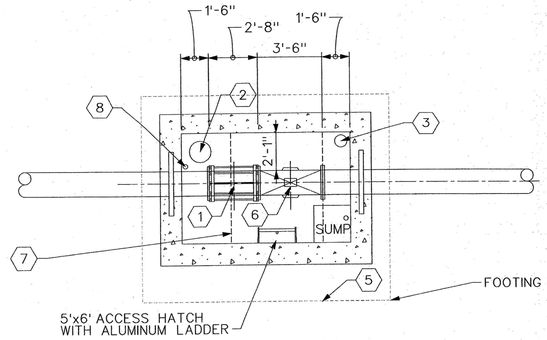


2 FLOW CONTROL VALVE VAULT SECTIONAL PIPING PLAN

1/4" = 1'-0"

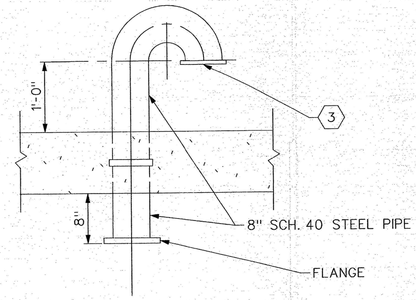


3 8" AIR INTAKE PIPE/BUG SCREEN

1" = 1'-0"

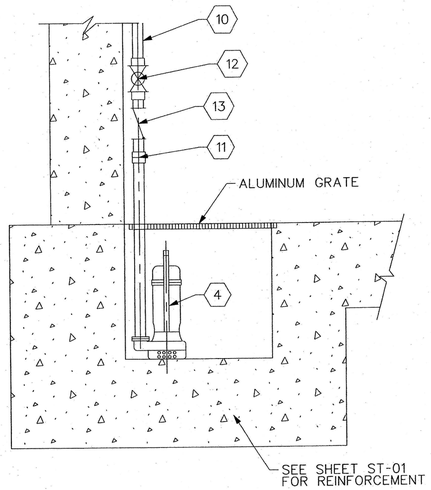


4 SUMP DETAIL

NOT TO SCALE

## NOTES BY SYMBOL "⬡"

1. ROMAC RESTRAINED FLANGED COUPLING ADAPTER & 32"-16" DIA. FLANGED BY PLAIN END.
2. MOTORIZED VENT (EF-7).
3. 8" AIR INTAKE PIPE/ 16- MESH STAINLESS STEEL BUG SCREEN.
4. SUBMERSIBLE PUMP, PER SPECIFICATIONS.
5. 1' WIDE CONCRETE SIDEWALK.
6. 16" CONTROL VALVE SEE CONTROL VALVE SUB-NOTE BELOW.
7. 5'X6' BILCO HATCH, TYPE J-AL, ALUMINUM WITH STAINLESS STEEL HARDWARE, RATED FOR 300 PSF PEDESTRIAN LOAD, WITH DRAIN AND PVC DRAIN PIPE ROUTED TO SUMP IN VAULT.
8. PRESSURE GAUGE.
9. GALVANIZED STEEL PIPE STANDS.
10. 1 1/2" GALVANIZED STEEL DISCHARGE. (SECURE AS REQUIRED W/ UNISTRUT)
11. QUICK DISCONNECT 24" MIN A.F.F.
12. 1 1/2" BALL VALVE
13. 1 1/2" CHECK VALVE

CONTROL VALVE SUB-NOTE

CONTROL VALVE SHALL BE CLA-VAL MODEL 131-AU ELECTRONIC CONTROL VALVE FOR TWO-WAY FLOW, OR ALTERNATIVE AS APPROVED BY THE TOWN OF ADDISON. THE VALVE SHALL BE EQUIPPED WITH AN X117DLCW VALVE POSITION TRANSMITTER WITH SINGLE LIMIT SWITCH TO PROVIDE A 4-20 mA SIGNAL OF VALVE POSITION. A 131VC-2 CONTROLLER SHALL BE PROVIDED FOR THE VALVE TO BE POSITIONED TO A SET POINT, ANYWHERE FROM 0% TO 100% OPEN, REGARDLESS OF FLOW DIRECTION. THE VALVE POSITION SHALL BE ABLE TO BE CONTROLLED BY SCADA, BOTH AUTOMATICALLY AND MANUALLY. THE VALVE SHALL BE POWER FAIL OPEN.

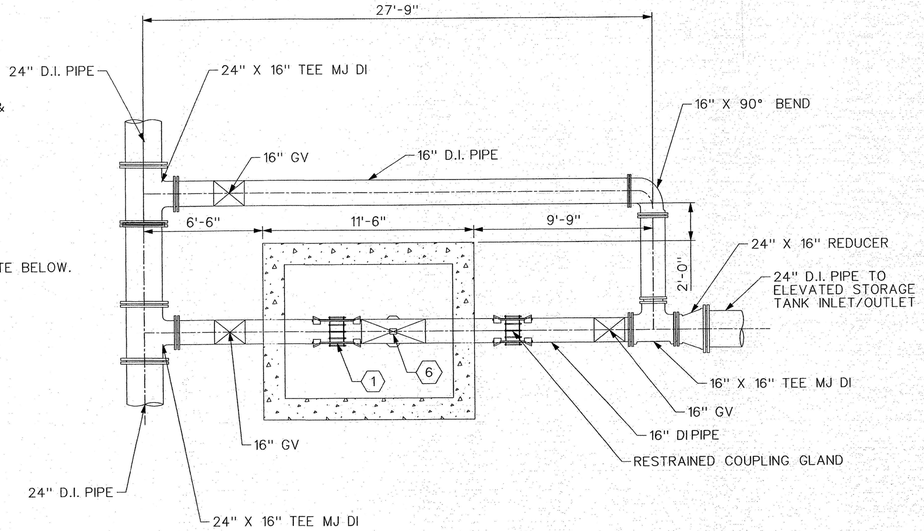


5 CONTROL VALVE BYPASS

1/4" = 1'-0"

4' 0 4' 8'
1/4"=1'-0"
1' 6" 0 1' 2'
1"=1'-0"


TEXAS REGISTERED ENGINEERING FIRM F-2144
FREESE AND NICHOLS, INC.


STATE OF TEXAS
RONALD D. KING
81073
LICENSED
PROFESSIONAL
ENGINEER
1-19-11


FREESE NICHOLS
2220 San Jacinto Blvd, Suite 350
Denton, Texas 76205
Phone - (940) 387-4600
Fax - (940) 387-4677
Web - www.freese.com


TOWN OF ADDISON, TEXAS

SURVEYOR 1.5 MG EST

CIVIL

FLOW CONTROL VALVE VAULT PLAN & SECTION

| NO. | ISSUES | BY | DATE |
|---|---|---|---|
| | | | |

FAN JOB NO. ADD08459
DATE 01/21/11
DESIGNED DAT
DRAWN SB
REVISED RJS
CHECKED RGK
FILE NAME CV-EST-DT-TYP04.SHT

VERIFY SCALE Bar is one inch on original drawing. If not one inch on this sheet, adjust scale.
0 1"

SHEET DT-04

CV-EST-DT-TYP04.SHT
CV-EST-DT-TYP04.SHT
CV-EST-DT-TYP04.SHT
CV-EST-DT-TYP04.SHT
CV-EST-DT-TYP04.SHT
CV-EST-DT-TYP04.SHT
CV-EST-DT-TYP04.SHT
CV-EST-DT-TYP04.SHT


MicroStation V8 User: amr Office: Denton
ADD08459 N:\ID\Drawings\CV-EST-DT-TYP04.SHT
Model: Model Sheet Model Sheet
Plot Scale: 01:1" = 1" in. Plotter: Adobe PDF
Date: 01\20\2011 - 08:42:00 AM Project: Freese and Nichols, Inc.
34Border.dgn CV-EST-DT-TYP04.SHT

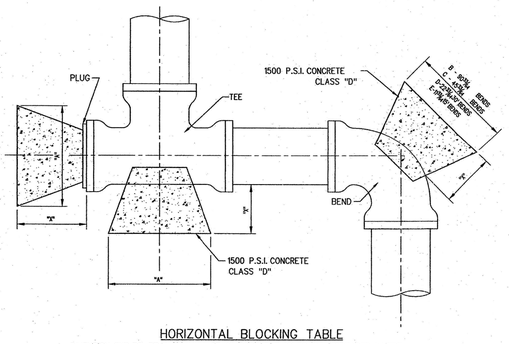


## HORIZONTAL BLOCKING TABLE

DIMENSION "X" TO BE A MINIMUM OF (1) FOOT, BUT IS TO BE INCREASED WHERE NECESSARY TO PROVIDE BEARING AGAINST UNDISTURBED TRENCH WALL.

| PIPE SIZE | "X" DIM. | PLUGS & TEE'S | | | 90°⅝ BENDS | | | 45°⅛ BENDS | | | 22½°&30° BENDS | | | 11¼°&15° BENDS | | |
|---|---|---|---|---|---|---|---|---|---|---|---|---|---|---|---|---|
| | | "A" | MIN. AREA | MAX. VOL. | "B" | MIN. AREA | MAX. VOL. | "C" | MIN. AREA | MAX. VOL. | "D" | MIN. AREA | MAX. VOL. | "E" | MIN. AREA | MAX. VOL. |
| 4" | 1'-6" | 1'-0" | .83 | .05 | 1'-0" | .83 | .05 | 1'-0" | .83 | .05 | 1'-0" | .83 | .05 | 1'-0" | .83 | .05 |
| 6" | 1'-6" | 1'-0" | 1.06 | .06 | 1'-2" | 1.50 | .09 | 1'-0" | .83 | .05 | 1'-0" | .83 | .05 | 1'-0" | .83 | .05 |
| 8" | 1'-6" | 1'-3" | 1.89 | .11 | 1'-6" | 2.66 | .15 | 1'-3" | 1.44 | .08 | 1'-0" | .83 | .05 | 1'-0" | .83 | .05 |
| 10" | 1'-6" | 1'-9" | 2.95 | .17 | 2'-0" | 4.17 | .24 | 1'-6" | 2.26 | .13 | 1'-3" | 1.15 | .07 | 1'-0" | .83 | .05 |
| 12" | 1'-6" | 2'-0" | 4.25 | .24 | 2'-3" | 6.00 | .34 | 1'-9" | 3.25 | .18 | 1'-3" | 1.65 | .10 | 1'-0" | .83 | .05 |
| 16" | 2'-0" | 2'-7" | 7.54 | .56 | 3'-0" | 10.65 | .79 | 2'-3" | 5.76 | .43 | 1'-8" | 2.94 | .22 | 1'-2" | 1.48 | .11 |
| 18" | 2'-0" | 2'-11" | 7.70 | .57 | 3'-5" | 10.89 | .82 | 2'-6" | 5.89 | .44 | 1'-10" | 3.01 | .22 | 1'-5" | 1.51 | .11 |
| 20" | 2'-0" | 3'-8" | 7.86 | .59 | 3'-9" | 11.12 | .84 | 2'-9" | 6.01 | .45 | 2'-0" | 3.07 | .23 | 1'-7" | 1.54 | .12 |
| 24" | 2'-0" | 3'-8" | 11.33 | .84 | 4'-3" | 16.00 | 1.20 | 3'-2" | 8.65 | .65 | 2'-6" | 4.42 | .33 | 1'-10" | 2.22 | .17 |

NOTE: CALCULATIONS IN MIN. AREA COLUMN ARE IN Sq. Ft., CALCULATIONS IN MAXIMUM VOLUME COLUMN ARE IN Cu. Yd.

## 1 HORIZONTAL BLOCKING DETAIL

NOT TO SCALE

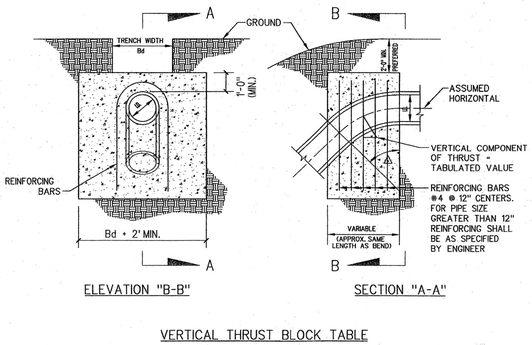


ELEVATION "B-B"

SECTION "A-A"

## VERTICAL THRUST BLOCK TABLE

| I.D. (IN.) | 11.25° THRUST (TONS) | 11.25° VOL. (C.Y.) | 22.50° THRUST (TONS) | 22.50° VOL. (C.Y.) | 30.00° THRUST (TONS) | 30.00° VOL. (C.Y.) | 45.00° THRUST (TONS) | 45.00° VOL. (C.Y.) | 67.50° THRUST (TONS) | 67.50° VOL. (C.Y.) | 90.00° THRUST (TONS) | 90.00° VOL. (C.Y.) | I.D. (IN.) |
|---|---|---|---|---|---|---|---|---|---|---|---|---|---|
| 4,6,8 | 1.0 | 0.5 | 2.0 | 1.0 | 2.5 | 1.3 | 3.6 | 1.8 | 4.8 | 2.3 | 5.0 | 2.5 | 4,6,8 |
| 10,12 | 2.2 | 1.1 | 4.3 | 2.2 | 5.7 | 2.8 | 8.0 | 4.0 | 10.5 | 5.2 | 11.3 | 5.7 | 10,12 |
| 16,18 | 5.0 | 2.5 | 9.7 | 4.9 | 12.7 | 6.4 | 18.0 | 9.0 | 23.5 | 11.8 | 25.5 | 12.7 | 16,18 |
| 20 | 6.1 | 3.1 | 12.0 | 5.0 | 15.7 | 7.9 | 22.2 | 11.1 | 29.2 | 14.5 | 31.4 | 15.7 | 20 |
| 24 | 8.2 | 4.4 | 17.3 | 8.7 | 22.6 | 11.3 | 32.0 | 16.0 | 41.8 | 20.9 | 45.2 | 22.6 | 24 |
| 30 | 10.5 | 5.2 | 20.3 | 10.1 | 26.5 | 13.3 | 37.5 | 18.8 | 49.0 | 24.5 | 53.1 | 26.5 | 30 |
| 36 | 14.9 | 7.5 | 29.2 | 14.6 | 38.2 | 19.1 | 54.0 | 27.0 | 70.5 | 35.3 | 76.4 | 38.2 | 36 |
| 42 | 20.3 | 10.1 | 39.8 | 19.8 | 52.0 | 26.0 | 73.5 | 36.7 | 96.0 | 48.0 | 104.0 | 52.0 | 42 |
| 48 | 26.5 | 13.2 | 51.9 | 26.0 | 67.9 | 33.9 | 96.0 | 48.0 | 126.0 | 62.7 | 136.0 | 67.9 | 48 |
| 54 | 33.5 | 16.8 | 65.7 | 32.9 | 85.9 | 42.9 | 122.0 | 60.7 | 159.0 | 79.4 | 172.0 | 85.9 | 54 |
| 60 | 41.4 | 20.7 | 81.2 | 40.6 | 106.0 | 53.0 | 150.0 | 75.0 | 196.0 | 98.0 | 212.0 | 106.0 | 60 |
| 66 | 50.1 | 25.0 | 98.2 | 49.1 | 128.0 | 64.2 | 182.0 | 90.7 | 237.0 | 119.0 | 257.0 | 128.0 | 66 |
| 72 | 59.6 | 29.8 | 117.0 | 58.4 | 153.0 | 76.3 | 216.0 | 108.0 | 282.0 | 141.0 | 305.0 | 153.0 | 72 |
| 78 | 69.9 | 35.0 | 137.0 | 68.5 | 179.0 | 90.0 | 254.0 | 127.0 | 331.0 | 166.0 | 358.0 | 179.0 | 78 |
| 84 | 81.1 | 40.5 | 159.0 | 79.5 | 208.0 | 104.0 | 294.0 | 147.0 | 384.0 | 192.0 | 416.0 | 208.0 | 84 |
| 90 | 93.1 | 46.5 | 183.0 | 91.3 | 239.0 | 119.0 | 337.0 | 169.0 | 441.0 | 221.0 | 477.0 | 239.0 | 90 |
| 96 | 106.0 | 53.0 | 208.0 | 104.0 | 272.0 | 136.0 | 384.0 | 192.0 | 502.0 | 251.0 | 543.0 | 272.0 | 96 |

## 2 VERTICAL THRUST BLOCK AT PIPE BEND

NOT TO SCALE

NOTES:
1. CRADLE TO EXTEND FULL WIDTH OF TRENCH. SEE STANDARD CRADLE DETAIL.
2. THIS DETAIL APPLIES TO VERTICAL BENDS WITH DOWNWARD THRUST. REACTION. SEE ANCHOR BLOCK DETAILS FOR UPWARD THRUSTS.
3. DO NOT EXTEND CRADLE PAST JOINTS.
4. DIMENSION "L" IN FEET. MAX. VOLUME IN CUBIC YARDS AND IS PROVIDED FOR QUANTITY MEASUREMENT.

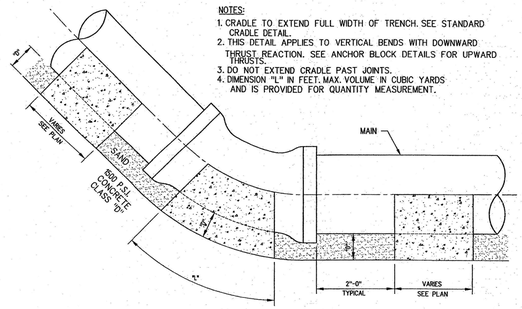


"D" = 6" MINIMUM OR TO UNDISTURBED SOIL

## CONCRETE CRADLE TABLE

| PIPE CLASS | PIPE SIZE | 11¼° - 15° "L" | 11¼° - 15° MAX. VOL. | 22½° - 30° "L" | 22½° - 30° MAX. VOL. | 45° "L" | 45° MAX. VOL. | 90° "L" | 90° MAX. VOL. |
|---|---|---|---|---|---|---|---|---|---|
| 150 | 6" | .42 | .02 | .45 | 0.02 | .50 | .02 | 1.00 | .04 |
| 150 | 8" | .42 | .02 | .45 | .02 | .80 | .04 | 1.40 | .06 |
| 150 | 10" | .42 | .03 | .58 | .03 | 1.15 | .06 | 2.03 | .11 |
| 150 | 12" | .42 | .04 | .73 | .05 | 1.43 | .09 | 2.53 | .17 |
| 150 | 16" | .42 | .08 | .74 | .14 | 1.48 | .27 | 2.61 | .48 |
| 150 | 18" | .66 | .14 | 1.30 | .28 | | | | |
| 150 | 20" | .77 | .18 | 1.53 | .36 | | | | |
| 200 | 18" | .88 | .18 | 1.74 | .37 | SEE PLAN SHEETS FOR BLOCKING | | SEE PLAN SHEETS FOR BLOCKING | |
| 200 | 20" | 1.03 | .24 | 2.04 | .48 | | | | |
| 250 | 18" | 1.05 | .22 | 2.03 | .43 | | | | |
| 250 | 20" | 1.20 | .28 | 2.38 | .56 | | | | |

## 3 CONCRETE CRADLE AT VERTICAL BEND

NOT TO SCALE

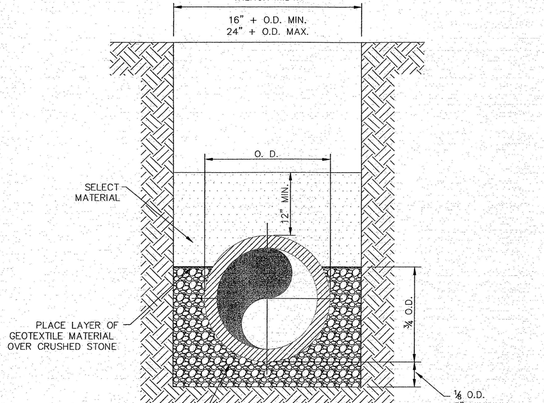


CLASS "B-2" EMBEDMENT

CRUSHED STONE SHALL BE 3/4", PASSING # 4 SIEVE

## 4 TYPICAL BACKFILL WATER MAIN P.V.C. WATER PIPE

NOT TO SCALE

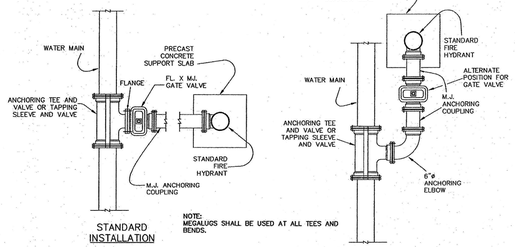


STANDARD INSTALLATION




ALTERNATE INSTALLATION

NOTE: MEGALUGS SHALL BE USED AT ALL TEES AND BENDS.

NOTE:
1. DESIGN, SITE REQUIREMENTS, THE GENERAL OPERATION, PAINTING AND DELIVERY OF ALL FIRE HYDRANTS SHALL BE IN ACCORDANCE WITH THE TOWN OF ADDISON WATER SYSTEM REQUIREMENTS.
2. FIRE HYDRANTS SHALL BE LOCATED A MINIMUM OF 18" OUTSIDE OF THE AREA BETWEEN THE P.C.'S OF THE CORNER TURNING RADIUS AT INTERSECTIONS AND DRIVEWAYS (SEE PLAN VIEW).
3. ACCEPTABLE MANUFACTURERS ARE MUELLER AND AVK

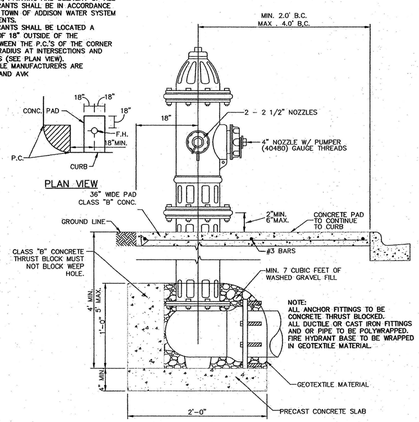


## 5 TYPICAL FIRE HYDRANT INSTALLTION

NOT TO SCALE

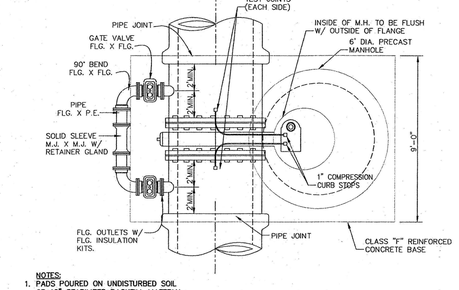


NOTES:
1. PADS POURED ON UNDISTURBED SOIL OR 12" STABILIZED BACKFILL MATERIAL.
2. BYPASS SIZE SPECIFIED BY THE PUBLIC WORKS DEPARTMENT.

PLAN
NTS

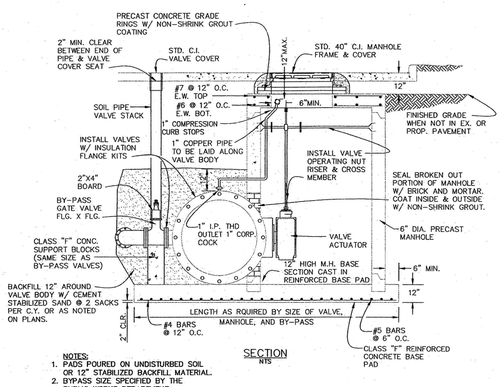


NOTES:
1. PADS POURED ON UNDISTURBED SOIL OR 12" STABILIZED BACKFILL MATERIAL.
2. BYPASS SIZE SPECIFIED BY THE PUBLIC WORKS DEPARTMENT.

SECTION
NTS

## 6 BUTTERFLY VALVE WITH MANHOLE INSTALLTION

NOT TO SCALE

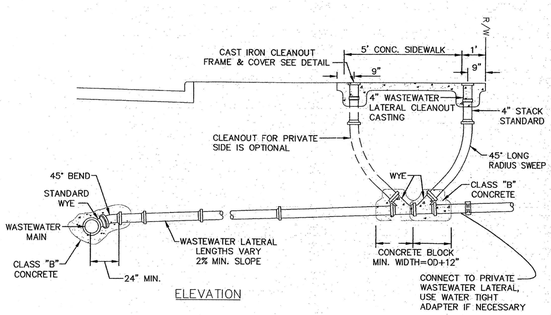


ELEVATION

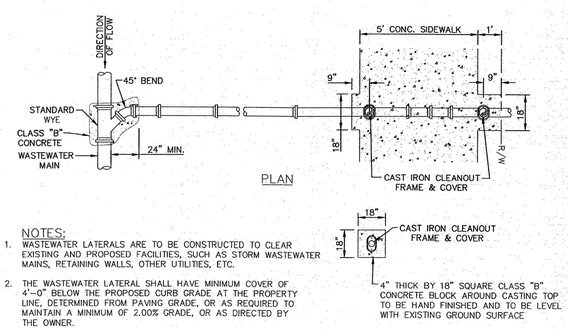


PLAN

NOTES:
1. WASTEWATER LATERALS ARE TO BE CONSTRUCTED TO CLEAR EXISTING AND PROPOSED FACILITIES, SUCH AS STORM WASTEWATER MAINS, RETAINING WALLS, OTHER UTILITIES, ETC.
2. THE WASTEWATER LATERAL SHALL HAVE MINIMUM COVER OF 4'-0" BELOW THE PROPOSED CURB GRADE AT THE PROPERTY LINE, DETERMINED FROM PAVING GRADE, OR AS REQUIRED TO MAINTAIN A MINIMUM OF 2.00% GRADE, OR AS DIRECTED BY THE OWNER.

## 7 TWO-WAY CLEANOUT NEW CONSTRUCTION

NOT TO SCALE

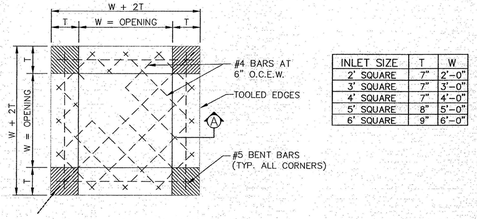


| INLET SIZE | T | W |
|---|---|---|
| 2' SQUARE | 7" | 2'-0" |
| 3' SQUARE | 7" | 3'-0" |
| 4' SQUARE | 7" | 4'-0" |
| 5' SQUARE | 8" | 5'-0" |
| 6' SQUARE | 9" | 6'-0" |

PLAN OF TOP SLAB
NTS

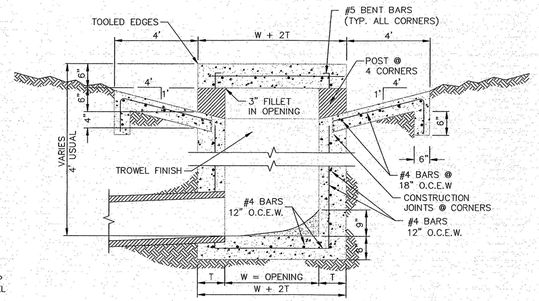


SECTION A
NTS

## 8 WYE INLET DETAIL

NOT TO SCALE

FREESE AND NICHOLS, INC.
TEXAS REGISTERED ENGINEERING FIRM F-2144

STATE OF TEXAS
RONALD G. KING
103rd CONFERENCE
81073
LICENSED
PROFESSIONAL ENGINEER
1-19-11

FREESE NICHOLS
2201 Main Street, Suite 300
Dallas, Texas 75201
Phone - (940) 387-4600
Fax - (940) 387-4677
www.freese.com

TOWN OF ADDISON, TEXAS
SURVEYOR 1.5 MG EST
CIVIL
UTILITY DETAILS

| NO. | ISSUES | BY | DATE |
|---|---|---|---|

F&N JOB NO. ADD08459
DATE 01/21/11
DESIGNED DAT
DRAWN SB
REVISED RJS
CHECKED RGK
FILE NAME CV-EST-DT-TYP05.SHT

SHEET DT-05

VERIFY SCALE Bar is one inch on original drawing. If not one inch on this sheet, adjust scale. 0 1"

CV-EST-DT-TYP05.SHT
CV-EST-DT-TYP05.SHT
CV-EST-DT-TYP05.SHT
CV-EST-DT-TYP05.SHT
CV-EST-DT-TYP05.SHT
CV-EST-DT-TYP05.SHT
CV-EST-DT-TYP05.SHT
CV-EST-DT-TYP05.SHT
CV-EST-DT-TYP05.SHT

34Border.dgn

MicroStation V8 User: amr Office: Denton
ADD08459 N:\IF\Drawings\CV-EST-DT-TYP05.SHT
Plotted: 01/19/2011 - 01:39:13 PM by amr
Plot Style: N:\plotdir_XM\Denton\tk17 Monochrome.tbl
Project: Freese and Nichols, Inc.
Date: 01\19\2011 - 01:39:13 PM

Office: Denton ADD08459 Date: 01.19\2011 - 01:39:13 PM User: amr File: N:\IF\Drawings\CV-EST-DT-TYP05.SHT

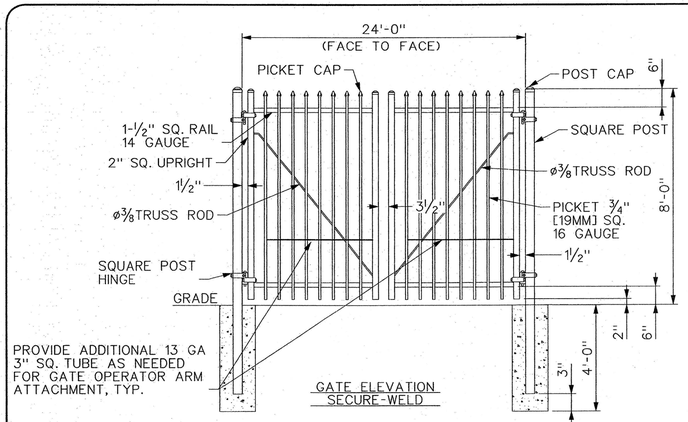


NOTES FOR DETAILS 1, 2, & 3 THIS SHEET:
1. SPECIFICATIONS SHOWN CAN BE CHANGED BY THE MANUFACTURER ONLY.
2. FOOTING WIDTH TO BE (4)X POST WIDTH.

## 1 SENTRY STYLE 2 RAIL DOUBLE SWING GATE

NOT TO SCALE

| POST TOP STYLE |
|---|
| FLAT |

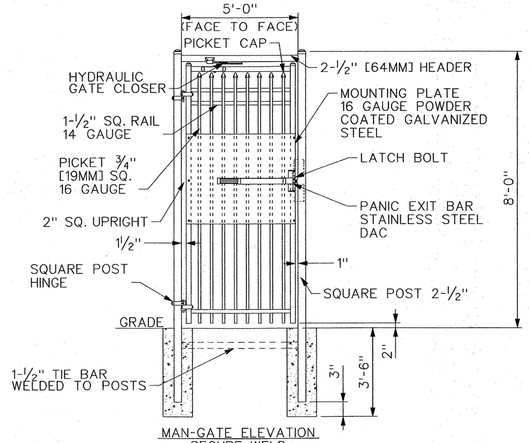


## 2 VISTA STYLE 3 RAIL PRE-HUNG SWING GATE

NOT TO SCALE

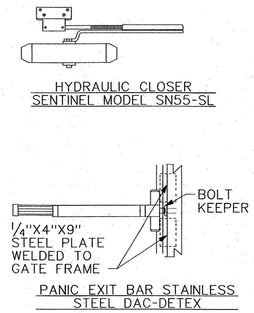


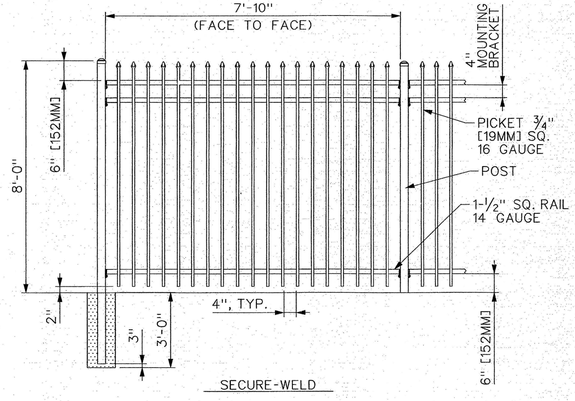


## 3 SENTRY STYLE 3 RAIL COMMERCIAL PANEL

NOT TO SCALE

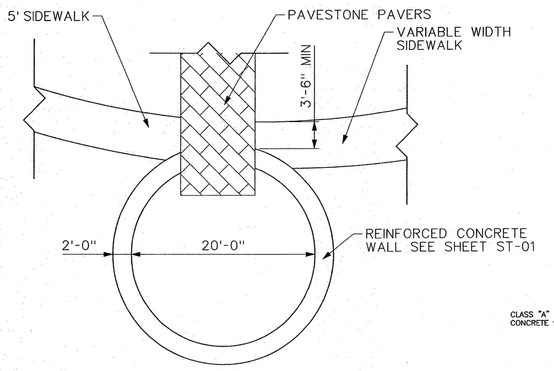


## 4 LANDSCAPE WALL

1/8" = 1'-0"

NOTES
1. HYDRO-GUARD STANDARD UNIT MODEL HG1, OR APPROVED EQUAL.
2. INSURE UNIT BASE IS LEVEL PRIOR TO AND AFTER BACKFILL PLACEMENT
3. EMBEDMENT FROM MAIN TO CURB VALVE SHALL BE WITH STANDARD EMBEDMENT REQUIREMENTS ON THIS SHEET.
4. COMPACT CLEAN BACKFILL AT 6" LIFTS AROUND UNIT
5. PRIOR TO INSTALLATION IN SANDY CONDITIONS, IT WILL BE NECESSARY TO PLACE PLASTIC SHEETING AROUND THE UNIT
6. PLACE #3 BAR 6" FROM PERIMETER EDGE IN ALL DIRECTIONS. PLACE A #3 BAR EVENLY SPACED BETWEEN UNIT AND VALVE BOX; PERPENDICULAR TO WATER LINE.
7. HYDRO-GUARD UNIT SHALL INCLUDE REQUIRED 9-VOLT BATTERY, PROGRAMMER, AND SOLENOID VALVE.

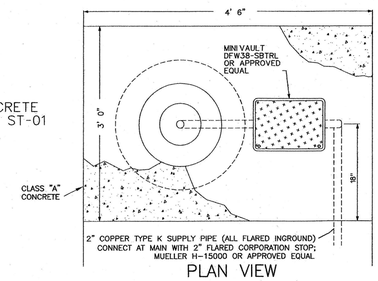


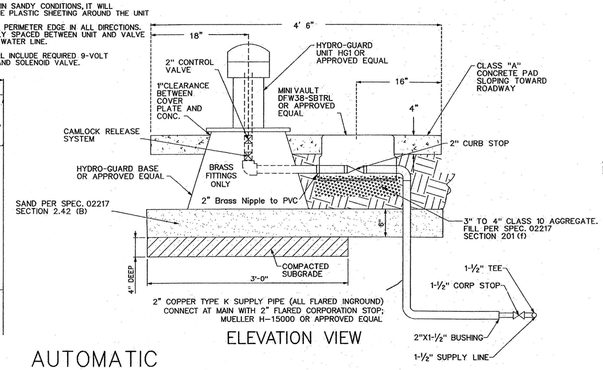


## 5 AUTOMATIC FLUSH VALVE

NOT TO SCALE

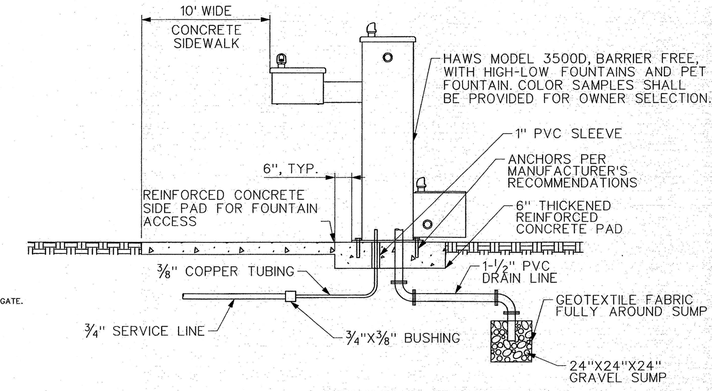


## 6 DRINKING FOUNTAIN DETAIL

NOT TO SCALE

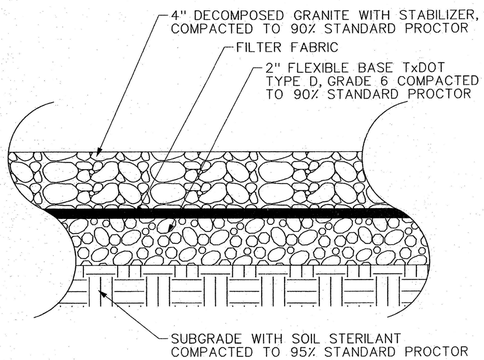


## 7 DECOMPOSED GRANITE TYPICAL SECTION

NOT TO SCALE

NOTES:
1. VEHICULAR PAVERS SHALL BE PAVESTONE HOLLAND STONE – PROVIDE SAMPLES FOR TOWN COLOR SELECTION.
2. PROVIDE BRICK WITHOUT FROGS OR CORES, IN SURFACES EXPOSED TO VIEW IN COMPLETED WORK.

T=PAVEMENT THICKNESS
B=BRICK PAVER THICKNESS

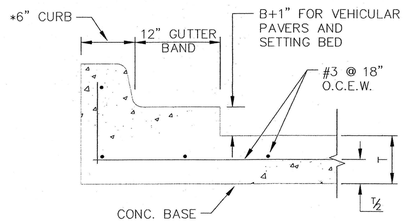


*NO CURB AT BARRIER FREE RAMP.

## SECTION THRU CURB AT DROP SLAB

NTS

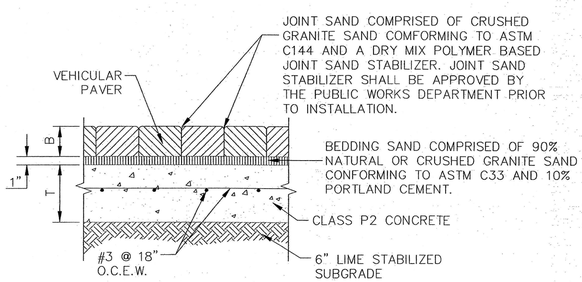


## 8 VEHICULAR PAVERS INSTALLATION IN VEHICULAR AREAS

NOT TO SCALE

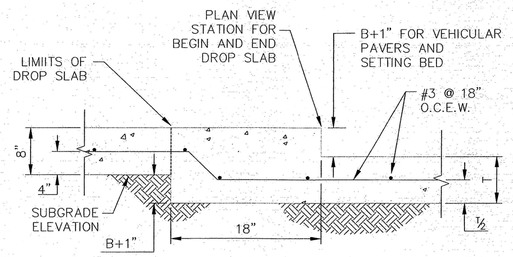


## LONGITUDINAL SECTION AT DROP SLAB

NTS

8' 0 8' 16'
1/8"=1'-0"

FREESE AND NICHOLS, INC.
TEXAS REGISTERED ENGINEERING FIRM F-2144

STATE OF TEXAS
RONALD G. KING
81073
LICENSED
PROFESSIONAL ENGINEER
1-19-11

FREESE NICHOLS
2200 Ross Ave., Suite 350
Dallas, Texas 75201
Phone: (214) 217-2200
Fax: (214) 217-2299
Web: www.freese.com

TOWN OF ADDISON, TEXAS
SURVEYOR 1.5 MG EST
CIVIL
SITE FEATURE PLANS & DETAILS

| NO. | ISSUES | BY | DATE |
|---|---|---|---|

| F&N JOB NO. | ADD08459 |
|---|---|
| DATE | 01/21/11 |
| DESIGNED | DAT |
| DRAWN | SB |
| REVISED | RJS |
| CHECKED | RGK |
| FILE NAME | CV-EST-DT-TYP06.SHT |

VERIFY SCALE Bar is one inch on original drawing. If not one inch on this sheet, adjust scale.
0 1"

SHEET
DT-06

CV-EST-DT-TYP06.SHT
CV-EST-DT-TYP06.SHT
CV-EST-DT-TYP06.SHT
CV-EST-DT-TYP06.SHT
CV-EST-DT-TYP06.SHT
CV-EST-DT-TYP06.SHT
CV-EST-DT-TYP06.SHT
CV-EST-DT-TYP06.SHT
CV-EST-DT-TYP06.SHT
CV-EST-DT-TYP06.SHT

MicroStation V8 User: amr Office: Denton
ADD08459 N:\...\Drawings\CV-EST-DT-TYP06.SHT
Plotter: ...\plotdrv_XM\Denton11x17-Mono.plt
Plot Scale: 1.000 Plot Offset:
Date: 01\19\2011 - 01:38:32 PM Project: Freese and Nichols, Inc.

34Border.dgn

Office: Denton ADD08459 Date: 01\19\2011 - 01:38:32 PM User: amr File: N:\IF\Drawings\CV-EST-DT-TYP06.SHT

NOTES:

1. PERIMETER SEDIMENT BARRIERS AND CONSTRUCTION EXIT MUST BE IN PLACE BEFORE STARTING SOIL DISTURBING ACTIVITIES. WHEN INSTALLING SEDIMENT BARRIERS, DO NOT TRENCH WITHIN THE DRIP LINE OF TREES TO BE SAVED.

2. RETAIN FLOATABLE AND WIND BLOWN MATERIALS ON SITE BY STORING ALL TRASH AND BUILDING MATERIAL WASTE IN ENCLOSURES UNTIL PROPER DISPOSAL AT OFF-SITE FACILITIES. CHECK ADJACENT AREAS DAILY AND PICK UP CONSTRUCTION WASTE MATERIALS AND DEBRIS THAT HAVE BLOWN OR WASHED OFF SITE.

3. INSTALL A TEMPORARY PIT OR BASIN FOR ON-SITE CONTAINMENT OF CONCRETE WASTE FROM MIXING DRUMS AND CHUTES.

4. INSTALL A LIQUID TIGHT BERMED AREA (LINER REQUIRED), OR OTHER SPILL PROTECTION MEASURE PER THE FIRE CODE, FOR ANY TEMPORARY FUEL TANKS PLACED ON SITE DURING CONSTRUCTION.

5. PERMANENTLY STABILIZE ALL SURFACE AREA WITHIN AND ADJACENT TO THIS SITE THAT IS DISTURBED BY CONSTRUCTION OF THE PROPOSED FACILITY. THIS INCLUDES REVEGETATION OF SWALES, SLOPES, AREAS AROUND DRAINAGE OUTFALL LOCATIONS AND OTHER BARE GROUND THAT IS EXPOSED BY VEHICLES, GRADING AND OTHER CONSTRUCTION ACTIVITIES. STABILIZATION IS OBTAINED WHEN THE DISTURBED SURFACE IS COVERED WITH STRUCTURES, PAVING AND/OR PERENNIAL VEGETATION HAVING A UNIFORM DENSITY OF AT LEAST 70 PERCENT. STABILIZATION OF ALL DISTURBED AREA IS REQUIRED BEFORE TERMINATING MAINTENANCE AND REMOVAL OF EROSION CONTROL MEASURES.

6. CONTRACTORS OR DEVELOPER SHALL INSPECT POLLUTION CONTROL MEASURES AT LEAST ONCE EVERY 14 DAYS AND WITHIN 24 HOURS AFTER A STORM EVENT OF 1/2 INCH OR GREATER. REPAIR AND REPLACE DAMAGED MEASURES AS NECESSARY TO RETAIN SEDIMENT AND OTHER POLLUTANTS ON SITE. CONTROL MEASURES THAT PROVE TO BE INEFFECTIVE SHALL BE REPLACED WITH MORE EFFECTIVE MEASURES OR ADDITIONAL MEASURES WITHIN (7) CALENDAR DAYS. REPEATED FAILURE OF A CONTROL MEASURE REQUIRES INSTALLATION OF A MORE SUITABLE DEVICE TO PREVENT DISCHARGE OF POLLUTANTS FROM THE CONSTRUCTION SITE.

7. AT STABILIZED CONSTRUCTION ENTRANCE, TOP-DRESS THE EXIT WITH CLEAN STONE WHEN THE SURFACE BECOMES TRACKED WITH MUD OR SEDIMENT. SEDIMENT DISCHARGED OR TRACKED TO EXISTING PAVEMENT SHALL BE REMOVED DAILY.

8. FOR EROSION CONTROL DETAILS SEE THIS SHEET.

9. ALL RUNOFF FROM MATERIALS USED IN THE SUBGRADE STABILIZATION PROCESS MUST BE CONTAINED.

10. REMOVE SEDIMENT FROM CONTROL MEASURES WHEN DESIGN CAPACITY IS REDUCED BY 50%.

11. OFF-SITE VEHICLE TRACKING OF SEDIMENTS AND THE GENERATION OF DUST SHALL BE MINIMIZED. HAUL ROADS AND GRADED AREAS SHALL BE DAMPENED FOR DUST CONTROL.

12. DISTURBED AREAS ON WHICH CONSTRUCTION ACTIVITY HAS CEASED (TEMPORARILY OR PERMANENTLY) SHALL BE STABILIZED WITHIN 14 DAYS UNLESS ACTIVITIES ARE SCHEDULED TO RESUME AND DO SO WITHIN 21 DAYS.

13. CONTRACTOR SHALL ENSURE AND DEMONSTRATE COMPLIANCE WITH APPLICABLE STATE AND/OR LOCAL WASTE DISPOSAL, SANITARY SEWER AND SEPTIC SYSTEM REGULATIONS.

14. ALLOWABLE NON-STORM WATER DISCHARGES:

    1. FIRE HYDRANT FLUSHINGS
    2. WATER USED TO WASH VEHICLES OR CONTROL DUST
    3. POTABLE WATER SOURCES, SUCH AS FLUSHING NEW WATER DISTRIBUTION PIPES
    4. IRRIGATION DRAINAGE
    5. WATER FROM TANK OVERFLOW ONSITE.

15. INSTALL CURB INLET PROTECTION AT ALL STORM DRAIN INLETS FOLLOWING CONSTRUCTION AND MAINTAIN UNTIL ALL ADJACENT AREAS IN WATERSHED ARE STABILIZED.

EXISTING UTILITIES ARE INDICATED ON THE PLANS FROM AVAILABLE INFORMATION. IT SHALL BE THE RESPONSIBILITY OF THE CONTRACTOR TO VERIFY THE LOCATION OF ALL UTILITIES, TO NOTIFY ALL UTILITY COMPANIES OF THE CONTRACTORS OPERATIONS, TO PROTECT ALL UTILITIES FROM DAMAGE, TO REPAIR ALL UTILITIES DAMAGED DUE TO THE CONTRACTORS OPERATIONS, AND TO NOTIFY THE ENGINEER PROMPTLY OF ALL CONFLICTS OF THE WORK WITH EXISTING UTILITIES.

## STABILIZED CONSTRUCTION ENTRANCE

GENERAL NOTES:

1. STONE SHALL BE 3 TO 5 INCH DIAMETER CRUSHED ROCK OR ACCEPTABLE CRUSHED PORTLAND CEMENT CONCRETE.

2. LENGTH SHALL BE SHOWN ON PLANS, WITH A MINIMUM LENGTH OF 30 FEET FOR LOTS WHICH ARE LESS THAN 150 FEET FROM EDGE OF PAVEMENT. THE MINIMUM DEPTH IN ALL OTHER CASES SHALL BE 50 FEET.

3. THE THICKNESS SHALL NOT BE LESS THAN 6 INCHES.

4. THE WIDTH SHALL BE NO LESS THAN THE FULL WIDTH OF ALL POINTS OF INGRESS OR EGRESS.

5. WHEN NECESSARY, VEHICLES SHALL BE CLEANED TO REMOVE SEDIMENT PRIOR TO ENTRANCE ONTO A PUBLIC ROADWAY. WHEN WASHING IS REQUIRED, IT SHALL BE DONE ON AN AREA STABILIZED WITH CRUSHED STONE WITH DRAINAGE FLOWING AWAY FROM BOTH THE STREET AND THE STABILIZED ENTRANCE. ALL SEDIMENT SHALL BE PREVENTED FROM ENTERING ANY STORM DRAIN, DITCH, OR WATERCOURSE USING APPROVED METHODS.

6. THE ENTRANCE SHALL BE MAINTAINED IN A CONDITION WHICH WILL PREVENT TRACKING OR FLOWING OF SEDIMENT ONTO PAVED SURFACES. THIS MAY REQUIRE PERIODIC TOP DRESSING WITH ADDITIONAL STONE AS CONDITIONS DEMAND. ALL SEDIMENT SPILLED, DROPPED, WASHED, OR TRACKED ONTO PAVED SURFACES, MUST BE REMOVED IMMEDIATELY.

7. THE ENTRANCE MUST BE PROPERLY GRADED OR INCORPORATE A DRAINAGE SWALE TO PREVENT RUNOFF FROM LEAVING THE CONSTRUCTION SITE.

NORTH CENTRAL COUNCIL OF GOVERNMENTS
STD. SPEC. 02270.B DWG. NO. 2020 B
DEC. '92

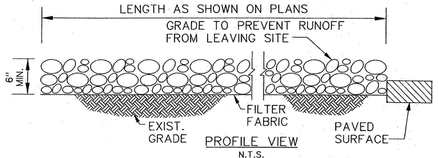


NORTH CENTRAL COUNCIL OF GOVERNMENTS
STD. SPEC. 02270.G DWG. NO. 2020 A
DEC. '92

STABILIZED CONSTRUCTION ENTRANCE

## SILT FENCE

GENERAL NOTES:

1. STEEL POSTS WHICH SUPPORT THE SILT FENCE SHALL BE INSTALLED ON A SLIGHT ANGLE TOWARD THE ANTICIPATED RUNOFF SOURCE. POST MUST BE EMBEDDED A MINIMUM OF ONE FOOT.
2. THE TOE OF THE SILT FENCE SHALL BE TRENCHED IN WITH A SPADE OR MECHANICAL TRENCHER, SO THAT THE DOWNSLOPE FACE OF THE TRENCH IS FLAT AND PERPENDICULAR TO THE LINE OF FLOW. WHERE FENCE CANNOT BE TRENCHED IN, (e.g. PAVEMENT), WEIGHT FABRIC FLAP WITH ROCK ON UPHILL SIDE TO PREVENT FLOW FROM SEEPING UNDER FENCE.
3. THE TRENCH MUST BE A MINIMUM OF 6 INCHES DEEP AND 6 INCHES WIDE TO ALLOW FOR THE SILT FENCE FABRIC TO BE LAID IN THE GROUND AND BACKFILLED WITH COMPACTED MATERIAL.
4. SILT FENCE SHOULD BE SECURELY FASTENED TO EACH STEEL SUPPORT POST OR TO WOVEN WIRE, WHICH IS IN TURN ATTACHED TO THE STEEL FENCE POST. THERE SHALL BE A 3 FOOT OVERLAP, SECURELY FASTENED WHERE ENDS OF FABRIC MEET.
5. INSPECTION SHALL BE MADE WEEKLY AND AFTER EACH RAINFALL. REPAIR OR REPLACEMENT SHALL BE MADE PROMPTLY AS NEEDED.
6. SILT FENCE SHALL BE REMOVED WHEN THE SITE IS COMPLETELY STABILIZED SO AS NOT TO BLOCK OR IMPEDE STORM FLOW OR DRAINAGE.
7. ACCUMULATED SILT SHALL BE REMOVED WHEN IT REACHES A DEPTH OF HALF THE HEIGHT OF THE FENCE. THE SILT SHALL BE DISPOSED OF AT AN APPROVED SITE AND IN SUCH A MANNER AS TO NOT CONTRIBUTE TO ADDITIONAL SILTATION.

NORTH CENTRAL COUNCIL OF GOVERNMENTS
STD. SPEC. 02270.B DWG. NO. 2020 B
DEC. '92

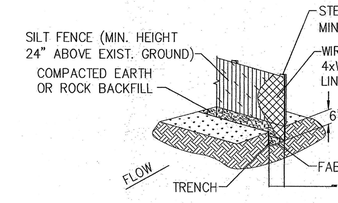


SILT FENCE

NORTH CENTRAL COUNCIL OF GOVERNMENTS
STD. SPEC. 02270.B DWG. NO. 2020 A DEC. '92

## ISOMETRIC PLAN VIEW

N.T.S.




## CURB INLET PROTECTION DETAIL

NOT TO SCALE

GENERAL NOTES:

1. WOODEN FRAME IS TO BE CONSTRUCTED OF 2X4 CONSTRUCTION GRADE LUMBER.
2. WIRE MESH BACKING MUST BE OF SUFFICIENT STRENGTH TO SUPPORT FILTER FABRIC, AND STONE FOR CURB INLETS, WITH WATER FULLY IMPOUNDED AGAINST IT.
3. FILTER CLOTH MUST BE OF A TYPE APPROVED FOR THIS PURPOSE. RESISTANT TO SUNLIGHT WITH SIEVE SIZE, EOS 40-85, TO ALLOW SUFFICIENT PASSAGE OF WATER AND REMOVAL OF SEDIMENT.
4. STONE IS 2" IN SIZE AND CLEAN, SINCE FINER WOULD CLOG THE CLOTH.
5. THE ASSEMBLY SHALL BE PLACED SO THAT THE ENDS OF THE SPACERS ARE A MINIMUM OF 1" BEYOND ENDS OF THE THROAT OPENING.
6. FORM THE WIRE MESH AND FILTER CLOTH TO THE CONCRETE GUTTER AND AGAINST THE FACE OF CURB ON BOTH SIDES OF THE INLET. PLACE CLEAN STONE OVER THE FILTER CLOTH IN SUCH A MANNER AS TO PREVENT WATER FROM ENTERING THE INLET UNDER OR AROUND THE CLOTH.
7. THIS TYPE OF INLET PROTECTION MUST BE INSPECTED FREQUENTLY AND THE FILTER CLOTH AND STONE REPLACED WHEN CLOGGED WITH SEDIMENT.
8. ASSURE THAT STORM FLOW DOES NOT BYPASS INLET BY INSTALLING TEMPORARY EARTH OR ASPHALT DIKES DIRECTING FLOW INTO INLET.
9. CONSTRUCT SIMILAR TYPE STRUCTURE AT BACK OF PROPOSED CURB INLETS WITH OPEN BACKS.


FREESE AND NICHOLS, INC.
TEXAS REGISTERED ENGINEERING FIRM F-2144


STATE OF TEXAS — REGISTERED — RANDALL G. KING — 81073 — LICENSED — PROFESSIONAL ENGINEER
1-19-11


FREESE NICHOLS
2220 San Jacinto Blvd. Suite 330
Denton, TX 76205
Phone (940) 382-4600
Fax (940) 387-4607
Web - www.freese.com


TOWN OF ADDISON, TEXAS

SURVEYOR 1.5 MG EST

CIVIL

EROSION CONTROL DETAILS

| NO. | ISSUES | BY | DATE |
|---|---|---|---|
| | | | |

F&N JOB NO. ADD08459
DATE 01/21/11
DESIGNED DAT
DRAWN SB
REVISED RJS
CHECKED RGK
FILE NAME CV-EST-DT-TYP07.SHT

VERIFY SCALE Bar is one inch on original drawing. If not one inch on this sheet, adjust scale.
0 1"

SHEET DT-07


MicroStation V8 User: amr Office: Denton
2008 Windows NT Version 5.1 (Build 2600) SP 3 CV-EST-DT-TYP07.SHT
Plotter: \\plot01-XM\Denton15x17-Mono.plt Model:Default
Plot Scale: 0.0000 x 0.0000 Inches Project:Freese and Nichols, Inc.
Plot Date/Time: 01/19/2011 01:40:40 PM 34Border.dgn

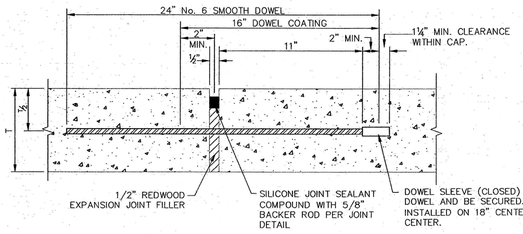


T=PAVEMENT THICKNESS

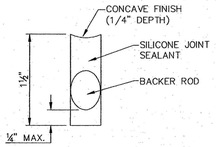


JOINT DETAIL
NTS

NOTES:
1. DOWELS AND REINFORCING BARS SHALL BE SUPPORTED BY AN APPROVED DEVICE AND MUST BE TIED OR CHAIRED ON EACH SIDE.
2. DOWELS MUST BE PERPENDICULAR TO FACE OF CONCRETE.
3. NO. 5 SMOOTH DOWEL BARS MAY BE USED IN 6" PAVEMENT.
4. TRANSVERSE EXPANSION JOINTS SHALL HAVE A MAXIMUM SPACING OF 600 FT.
5. TRANSVERSE EXPANSION JOINTS SHALL BE LOCATED AT INTERSECTIONS.

## 1 TRANSVERSE TITLE 2 EXPANSION JOINT

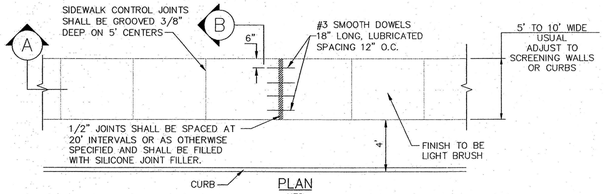


PLAN
NTS

1/2" THICKNESS PRE-MOULDED EXPASION JOINT FILLER SPACED 20'O.C.

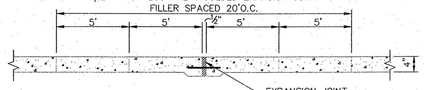


SECTION A
NTS

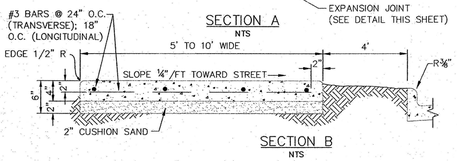


SECTION B
NTS

NOTE:
WHEN CONCRETE WALK IS ADJACENT TO CURB, DEPTH OF EXPANSION JOINT MATERIAL SHALL BE SUFFICIENT TO PREVENT CONCRETE TO CONCRETE CONTACT BETWEEN WALK AND CURB.

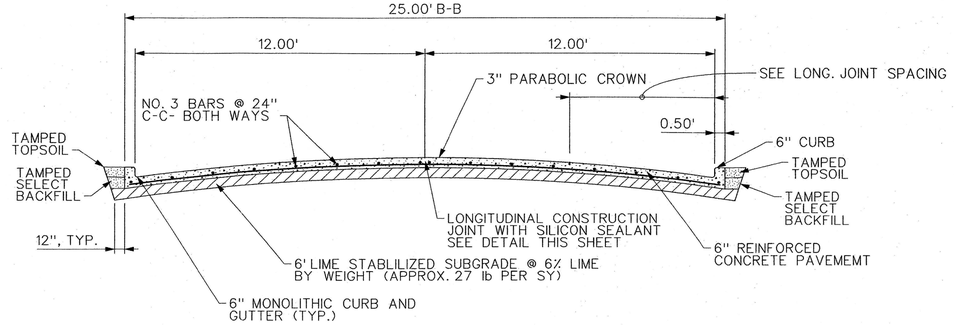


## 2 TYPICAL SECTION

NOT TO SCALE

NOTES:
1. THE FINISHED GRADE IN ALL AREAS DISTURBED DURING DRIVEWAY CONSTRUCTION SHALL RECEIVE SOLID SOD.
2. WHEN SIDEWALK CROSSES DRIVEWAYS, THE CROSS SLOPE SHALL NOT EXCEED 2%.

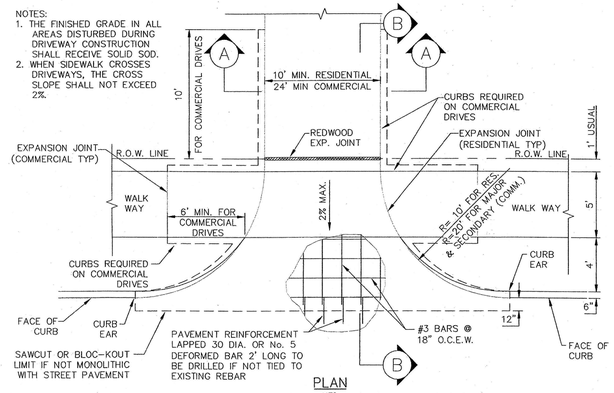


PLAN
NTS

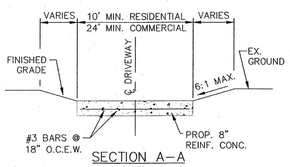


SECTION A-A
NTS

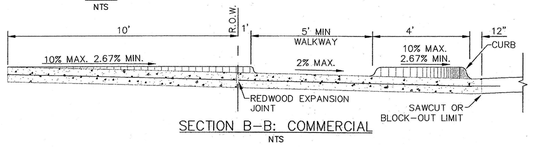


SECTION B-B: COMMERCIAL
NTS

## 4 TYPICAL DRIVEWAY APPROACH

NOT TO SCALE

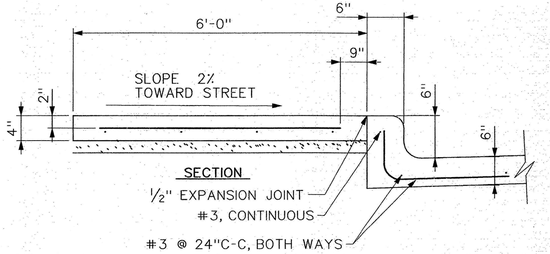


## 3 CONCRETE CURB & GUTTER

NOT TO SCALE

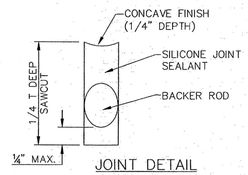


JOINT DETAIL
NTS

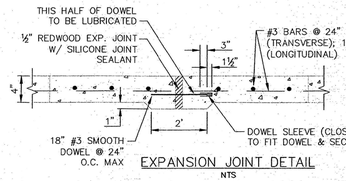


EXPANSION JOINT DETAIL
NTS

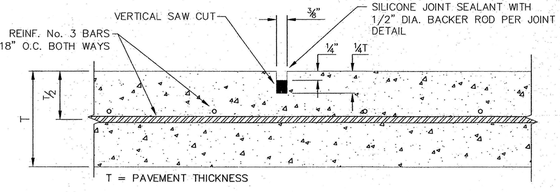


SAWED DUMMY JOINTS
NTS

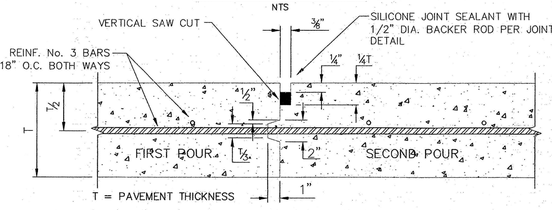


NOTE: CONTRACTOR SHALL PROTECT KEYWAY PRIOR TO SECOND POUR. IF LONGITUDINAL KEYWAY IS DAMAGED, CONTRACTOR SHALL REPAIR WITH THE USE OF LONGITUDINAL BUTT JOINT. DRILL AND GROUT DOWELS INTO FIRST POUR.

CONSTRUCTION JOINTS FOR PAVEMENT
NTS

TRANSVERSE AND LONGITUDINAL JOINTS

## 7 JOINT SEALANT DETAILS

NOT TO SCALE

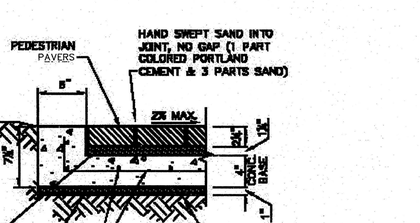


DETAIL 'A'
PAVERS SIDEWALK CROSS SECTION

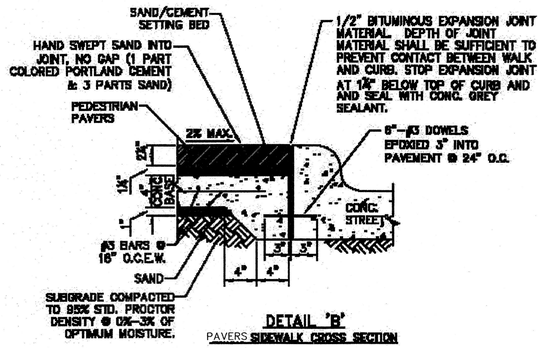


DETAIL 'B'
PAVERS SIDEWALK CROSS SECTION

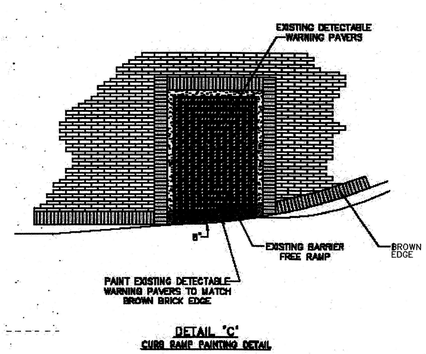


DETAIL 'C'
CURB RAMP PAINTING DETAIL

## 4 SIDEWALK DETAILS

NOT TO SCALE

NOTE:
PEDESTRIAN PAVERS SHALL BE PAVESTONE HOLLAND STONE. PROVIDE SAMPLES FOR TOWN COLOR SELECTION.

NOTES:
1. NO. 5 DEFORMED BAR MAY BE USED IN 6 INCH PAVEMENT.
2. LONGITUDINAL BUTT CONSTRUCTION MAY BE UTILIZED IN PLACE OF LONGITUDINAL HINGED (KEYWAY) JOINT AT CONTRACTORS OPTION.
3. DOWEL BARS SHALL BE DRILLED INTO PAVEMENT HORIZONTALLY BY USE OF A MECHANICAL RIG.
4. DRILLING BY HAND IS NOT ACCEPTABLE, PUSHING DOWEL BARS INTO GREEN CONCRETE IS NOT ACCEPTABLE.

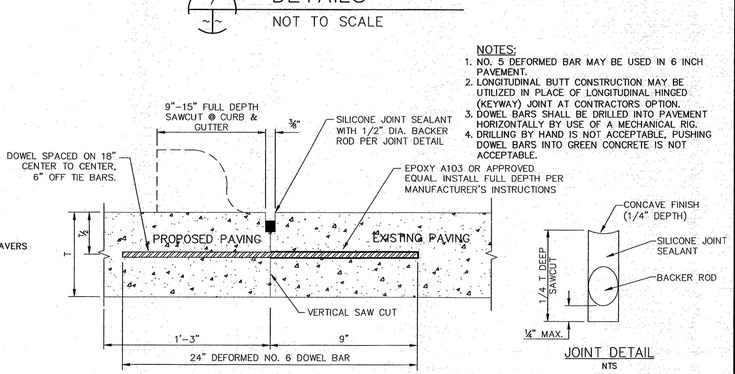


JOINT DETAIL
NTS

## 6 LONGITUDINAL BUTT JOINT

NOT TO SCALE

FREESE AND NICHOLS, INC.
TEXAS REGISTERED ENGINEERING FIRM F-2144
STATE OF TEXAS
81073
PROFESSIONAL ENGINEER
1-19-11
FREESE NICHOLS
2220 San Jacinto Blvd., Suite 330
Denton, Tx. 76205
Phone - (940)382-4600
Fax - (940)382-4707
Web - www.freese.com

TOWN OF ADDISON, TEXAS
SURVEYOR 1.5 MG EST
CIVIL
PAVING DETAILS

| NO. | ISSUES | BY | DATE |
|---|---|---|---|
| | | | |

FAN JOB NO. ADD08459
DATE 01/21/11
DESIGNED
DRAWN
REVISED DAT
CHECKED
FILE NAME CV-EST-DT-TYP08.SHT

VERIFY SCALE Bar is one inch on original drawing, if not one inch on this sheet, adjust scale.
0 1"

SHEET DT-08

MicroStation V8 User: amr Office: Denton
ADD08459 - N:\IF\Drawings\CV-EST-DT-TYP08.SHT
Level Mask: Default, Xrefs, Model, Raster, Non-Visible
Plot Scale: 1.0000 '/ ' in.
Date: 01\19\2011 - 01:41:40 PM
34Border.dgn
Project Freese and Nichols, Inc.
Office: Denton ADD08459 Date: 01\19\2011 - 01:41:40 PM User: amr File: N:\IF\Drawings\CV-EST-DT-TYP08.SHT

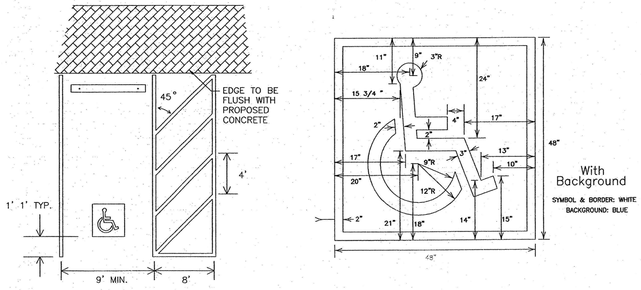


# TYPICAL ACCESSIBLE PARKING SPACE DIMENSIONS AND HANDICAP PAVEMENT MARKING

1

NOT TO SCALE

GENERAL NOTES:

1. All parking space limit lines shall be 4" solid white lines.
2. Aisle markings shown are examples only. Other methods to indicate a NO PARKING area are acceptable. Aisle markings shall be white.
3. Dimensions of limit lines, aisle markings, and symbol (with or without background) may vary + 10%.
4. Pavement marking symbols (with background):
   a) are REQUIRED unless stated elsewhere in the plans,
   b) should be placed toward the far end of the parking spaces so as to be visible to motorists in the travel lane,
   c) may be painted or prefabricated material, and
   d) shall be 30" x 30" minimum.
5. With approval of the Engineer, prefabricated pavement marking symbols with background of other dimensions exceeding the 30" x 30" minimum may be used. Alternative designs shall include a proportion sized symbol of accessibility, and shall conform to the illustrated colors for background, symbol and border.
6. An R7-8 sign:
   a) shall be REQUIRED for each accessible parking space,
   b) shall NOT be placed between two accessible parking spaces,
   c) shall NOT be placed in a location that restricts movement of wheelchairs within the adjacent sidewalk, and
   d) shall have a minimum mounting height of 7 feet. If mounted to wall or located so as not to be near pedestrian traffic minimum mounting height may be 5 feet.
7. Post mounted signs should be placed approximately 1 foot (or greater) behind the curb to prevent damage from vehicle overhang.
8. Signs may be mounted directly to an adjacent wall of a building when post mounting is impractical (see 6(d)). overhang.ignce.

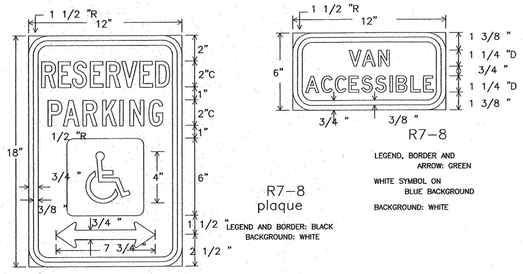


R7-8 plaque

LEGEND AND BORDER: BLACK
BACKGROUND: WHITE




R7-8

LEGEND, BORDER AND ARROW: GREEN
WHITE SYMBOL ON BLUE BACKGROUND
BACKGROUND: WHITE

| SPECIFICATION REFERENCE TABLE | |
|---|---|
| MATERIALS AND TESTS DIVISION SPECIFICATIONS | |
| ALUMINUM SIGN BLANKS | D-9-7110 |
| REFLECTIVE SHEETING, TYPE C (HIGH SPECIFIC INTENSITY) | D-9-8300 |

GENERAL SIGN NOTES:

The Alphabets and lateral spacing between letters and numerals shall conform with the Texas "Manual on Uniform Traffic Control Devices for Streets and Highways", latest edition, and any approved changes thereto. Lateral spacing of text shall provide a balanced appearance. All materials shall conform to Department Specifications.

Legend shall be applied by screening process of black and/or transparent colored ink, cut-out black vinyl non-reflective decal sheeting and/or reflective sheeting or combination thereof. Background shall be white reflective sheeting (Type C).

Sign blanks shall be one piece 0.08 inch thick sheet aluminum alloy (Type A). unless otherwise noted elsewhere in the plans.

# HANDICAP PARKING SIGN

4

NOT TO SCALE

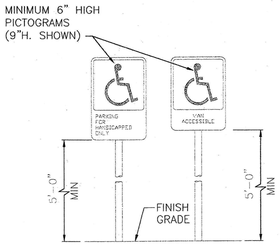


NOTES:

1. SIGNS SHALL BE 16 GAUGE STEEL WITH BAKED ENAMEL FINISH.
2. VAN ACCESSIBLE PARKING SPACE SHALL BE AS INDICATED.
3. ATTACH SIGNS AS PER TxDOT STANDARD MSX-76.

# ACCESSIBLE PARKING SIGNAGE

2

NOT TO SCALE

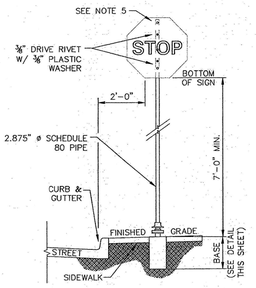


# TYPICAL POST DETAIL

3

NOT TO SCALE

TRAFFIC CONTROL NOTES:

1. ALL SIGNAGE, BARRICADES, AND PAVEMENT MARKINGS SHALL BE IN ACCORDANCE WITH THE LATEST EDITION OF THE TEXAS MANUAL ON UNIFORM TRAFFIC CONTROL DEVICES AND THE STANDARD HIGHWAY SIGN FOR TEXAS (1988D).
2. LOCATIONS SHOWN FOR SIGNAGE AND PAVEMENT MARKINGS ARE APPROXIMATE; FINAL LOCATIONS MAY CHANGE DUE TO POST CONSTRUCTION CONDITIONS AND PRESENCE OF OTHER PHYSICAL FEATURES. FINAL LOCATION OF ALL TRAFFIC CONTROL DEVICES SHALL BE FIELD VERIFIED WITH THE PUBLIC WORKS DEPARTMENT PRIOR TO INSTALLATION.
3. ALL SIGNS SHALL BE HIGH INTENSITY AND THE SIZES SHALL BE STANDARD UNLESS OTHERWISE NOTED.
4. ALL SIGNS, POSTS, AND MATERIALS SHALL BE INSTALLED PER DETAILS IN THIS MANUAL.
5. FOR STOP SIGNS THAT WILL ACCEPT FUTURE STREET SIGNS, EXTEND POST ABOVE THE STOP SIGN SO THAT 2 HOLES ARE AVAILABLE FOR MOUNTING. FOR ALL OTHERS, POST SHALL NOT EXTEND ABOVE THE SIGN.
6. CHANGES TO TYPICAL SIGN POST LOCATION MADE AT ENGINEER'S DISCRETION.

SPECIFICATIONS FOR SCHEDULE 80 PIPE (2.875" OUTSIDE DIAMETER)
- 0.087" NOMINAL WALL THICKNESS
- STEEL TUBING PER ASTM A500 Gr C
- OTHER SEAMLESS OR ELECTRIC-RESISTANCE WELDED STEEL TUBING PER ASTM A53 MAY BE USED
- OUTSIDE DIAMETER AND WALL THICKNESS MAY BE USED IF THEY MEET THE FOLLOWING.
  - 46,000 PSI MINIMUM YIELD STRENGTH
  - 62,000 PSI MINIMUM TENSILE STRENGTH
  - 21% MINIMUM ELONGATION IN 2"
- WALL THICKNESS (UNCOATED) SHALL BE WITHIN THE RANGE OF 0.248" TO 0.304"
- OUTSIDE DIAMETER (UNCOATED) SHALL BE WITHIN THE RANGE OF 2.855" TO 2.890"

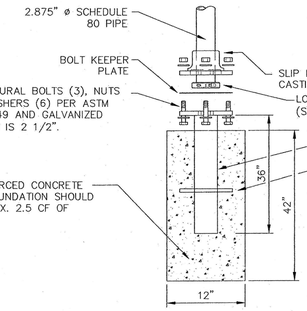


# SIGN BASE DETAIL

5

NOT TO SCALE

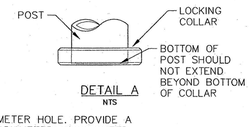


DETAIL A
NTS

R1-1 36"X36"

| DEPARTMENTAL MATERIAL SPECIFICATIONS | | |
|---|---|---|
| ALUMINUM SIGN BLANKS | | DMS-7110 |
| Square Ft. | Min. Thickness | |
| Less than 7.5 | 0.080 | |
| 7.5 to 15 | 0.100 | |
| Greater than 15 | 0.125 | |
| SIGN FACE MATERIALS | | DMS-8300 |
| USAGE | COLOR | SIGN FACE MATERIAL |
| BACKGROUND | ALL | TYPE C SHEETING |
| LEGEND & BORDERS | WHITE | TYPE C SHEETING |
| LEGEND & BORDERS | BLACK | ACRYLIC NON-REFLECTIVE FILM |

GENERAL NOTES:

1. Signs to be furnished shallbe as detailed elsewhere in the plans and/or as shown on sign tabulation sheet. Standard sign designs and arrow dimensions can be found in the "Standard Highway Sign Designs for Texas" (SHSD).
2. Regulatory sign legend shall use the Federal Highway Administration (FHWA) Standard Highway Alphabets (B, C, D, E, Emod or F).
3. Lateral spacing between letters and numerals shall conform with the SHSD, and any approved changes thereto. Lateral spacing of legend shall provide a balanced appearance when spacing is not shown.
4. Block legend and borders shallbe applied by screening process or cut-out acrylic non-reflective black film to white background sheeting, or combination thereof.
5. White legend and borders shallbe applied by screening process with transparent colored ink, transparent colored overlay film to white background sheeting or cut-out white sheeting to colored background sheeting, or combination thereof.
6. Colored legend shallbe applied by screening process with transparent colored ink, transparent colored overlay film or colored sheeting to background sheeting, or combination thereof.
7. Sign substrate shallbe any materialthat meets the Departmental Material Specification requirements of DMS-7110.
8. Mounting details for roadside mounted signs are shown in the "SMD series" Standard Plan Sheets.

# STOP SIGN DETAIL

6

NOT TO SCALE

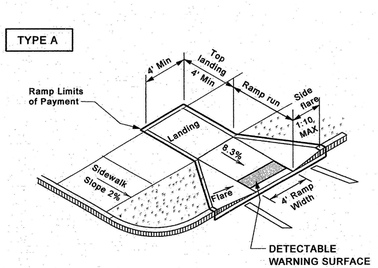


**PERPENDICULAR CURB RAMP**
**WITH SIDE FLARES NOT ADJACENT TO WALK SURFACE**

## SIDEWALK RAMP (CURB RAMP) GENERAL NOTES

1. All slopes are maximum allowable. The least possible slope that will still drain properly should be used. Adjust curb ramp length or grade of approach sidewalks as directed.
2. The minimum sidewalk width is 4'.
3. Landings shall be 4'x 4' minimum with a maximum 2% slope in any direction.
4. Maneuvering space at the bottom of curb ramps shall be a minimum of 4'x 4' wholly contained within the crosswalk and wholly outside the parallel vehicular travel path.
5. Maximum allowable cross slope on sidewalk and curb ramp surfaces is 2%.
6. Curb ramps with returned curbs may be used only where pedestrians would not normally walk across the ramp, either because the adjacent surface is planting or other non-walking surface or because the side approach is substantially obstructed. Otherwise, provide flared sides.
7. Details on this plan apply to all construction or reconstruction of streets, curbs, or sidewalks
8. To serve as a pedestrian refuge area, the median should be a minimum of 5' wide. Medians should be designed to provide accessible passage through them.
9. Curb cut ramps are to be located as shown on the plans or as directed by Engineer.
10. Crosswalk dimensions, crosswalk markings and stop bar locations shall be as shown elsewhere in the plans. At intersections where crosswalk markings are not required, curb ramps shall be aligned with theoretical crosswalks, or as directed by the Engineer.
11. Existing features that comply with TAS may remain in place unless changed on the plans.
12. Ramps shall be provided at all corners of street intersections where there is existing or proposed sidewalk and curb. Ramps shall also be provided at walk locations in mid-block in the vicinities of hospitals, medical centers, and stadiums.
13. Surface texture of the ramp shall be that obtained by a course brooming, transverse to the slope of the ramp except at detectable warning surface areas. See details A and B.
14. Separate curb ramp and landings from adjacent sidewalk and any other elements with premold or board joint of 3/4 " unless otherwise directed by the Engineer.
15. Provide a smooth transition where the curb ramps connect to the street.
16. Curbs shown on this sheet within the limits of payment are considered part of the curb ramp for payment, whether it is concrete curb, gutter, or combined curb and gutter.
17. Flare slope shall not exceed 10% measured along curb line and where pedestrians could walk across the ramp, then Maximum slope shall be 1:12. (8.3 %).
18. Sidewalks shall be ramped where the driveway curb is extended across the walk.
19. If possible, drainage structures should not be placed in line with ramps. Location of the ramps should take precedence over location of the drainage structure.
20. The normal gutter line profile shall be matained through the area of the ramp.
21. The actual limits of existing curb and gutter and sidewalk shall be directed by the engineer in the field.
22. Contraction joints, expansion joints and silicone sealing shall be subsidiary to unit price bid for sidewalks and ramps.

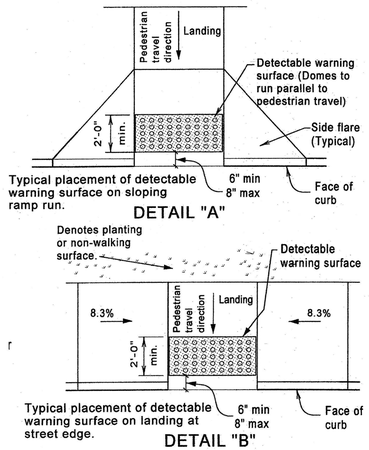


# SIDEWALK RAMP DETAIL

7

NOT TO SCALE

## GENERAL NOTES FOR DETECTABLE WARNINGS ON SIDEWALK RAMPS (CURB RAMPS)

1. Curb ramps must contain a detectable warning surface that consists of raised truncated domes complying with Section 4.29 of the Texas Accessibility Standards (TAS). The surface must contrast visually with adjoining surfaces, including side flares. Furnish dark brown or dark red detectable warning surface adjacent to uncolored concrete, unless specified elsewhere in the plans.
2. Detectable warning surfaces must be slip resistant and not allow water to accumulate.
3. Align truncated domes in the direction of pedestrian travel when entering the street.
4. Shaded areas indicate the approximate location for the detectable warning surface for each curb ramp type.
5. Detectable warning surfaces shall be a minimum of 24" in depth in the direction of pedestrian travel, and extend the full width of the curb ramp or landing where the pedestrian access route enters the street.
6. Detectable warning surfaces shall be located so that the edge nearest the curb line is a minimum of 6" and a maximum of 8" from the extension of the face of curb. Detectable warning surfaces may be curved along the corner radius.
7. The following is an approved list of Cast-In-Place Detectable Warning Materials and their manufacturers:
   7a. Armor Tile (vitrified polymer composite) by Engineered Plastics, Inc., Williamsville, NY.
   7b. Tactile Pavers (fired clay pavers) by Pine Hall Brick; Winston-Salem, NC.
   7c. Detectable Warning Paver (fired clay pavers) by Western Brick Co., Houston, Tx.
8. The above list of Detectable Warning Materials or their approved equal shall be used as the Detectable Warning surface on sidewalk (curb) ramps as shown on the plans and or details on this sheet.

FREESE AND NICHOLS, INC.
TEXAS REGISTERED ENGINEERING FIRM F-2144
STATE OF TEXAS
EDWARD C. CUNNINGHAM
81073
LICENSED PROFESSIONAL ENGINEER
1-19-11
FREESE NICHOLS
2220 San Jacinto Blvd., Suite 330
Denton, Tx. 76205
Phone: (940) 383-4600
F. (940) 383-4677
Web - www.freese.com

TOWN OF ADDISON, TEXAS
SURVEYOR 1.5 MG EST
CIVIL
PAVEMENT MARKING & SIGNAGE DETAILS

| NO. | ISSUES | BY | DATE |
|---|---|---|---|
| | | | |

FAN JOB NO. ADD08459
DATE 01/21/11
DESIGNED
DRAWN
REVISED DAT
CHECKED
FILE NAME CV-EST-DT-TYP09.SHT

VERIFY SCALE Bar is one inch on original drawing. If not one inch on this sheet, adjust scale.
0 1"

SHEET DT-09

MicroStation V8 User: amr Office: Denton
ADD08459 - N:\IF\Drawings\CV-EST-DT-TYP09.SHT
Plot Driver: HP Designjet 800 PS (Postscript).pltcfg Model: Default
Plot Scale: 1.0000 '=' in. Project: Freese and Nichols, Inc.
Date: 01\19\2011 - 01:43:46 PM 34Border.dgn
Office: Denton ADD08459 Date: 01\19\2011 - 01:43:46 PM User: amr File: N:\IF\Drawings\CV-EST-DT-TYP09.SHT

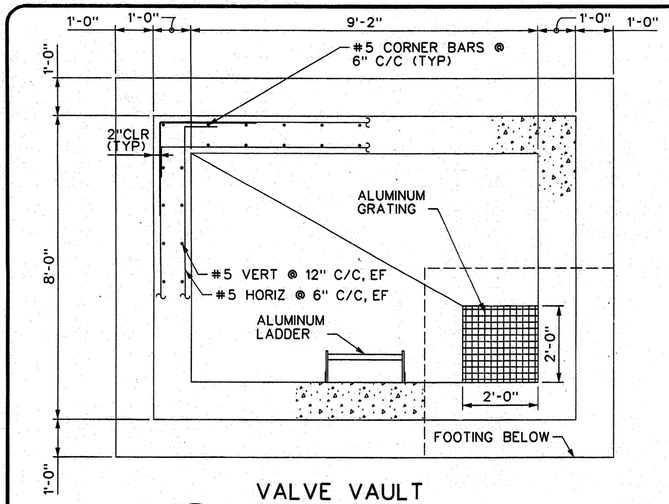


## VALVE VAULT SECTIONAL PLAN

1 — ½" = 1'-0"

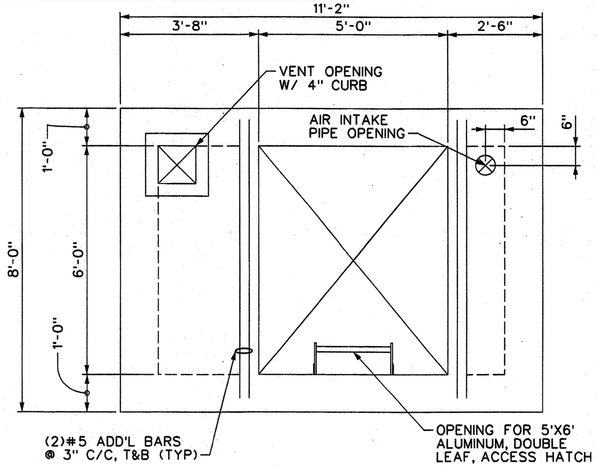


## VALVE VAULT TOP PLAN

2 — ½" = 1'-0"

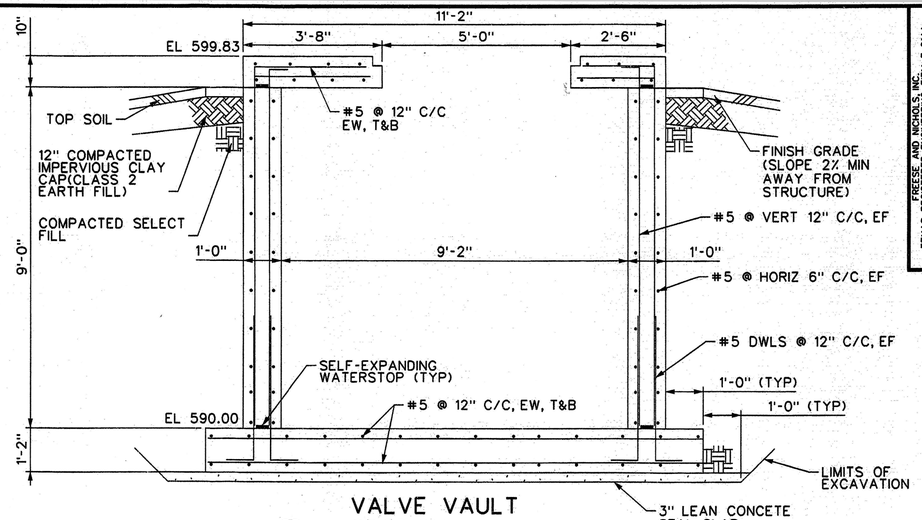


## VALVE VAULT SECTION

3 — ½" = 1'-0"

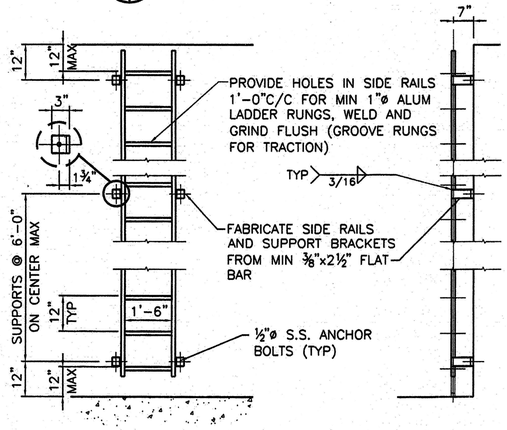


## ALUMINUM LADDER

4 — NOT TO SCALE

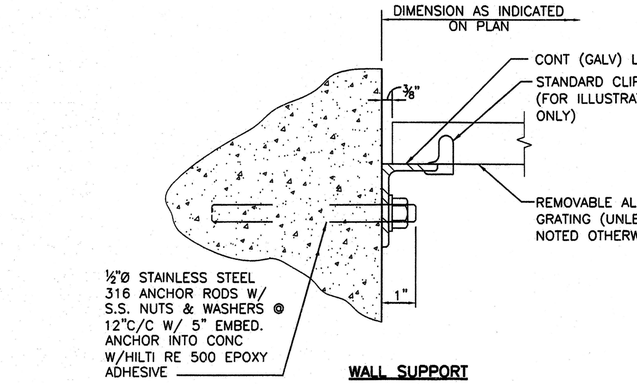


WALL SUPPORT

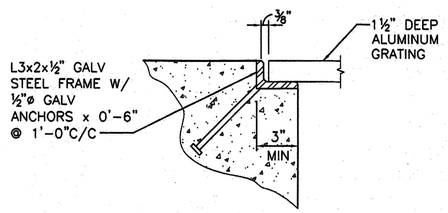


EMBEDMENT SUPPORT

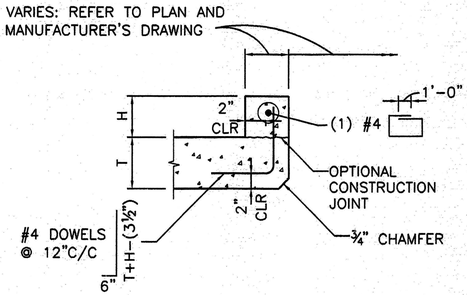


DETAIL NOTE:
COORDINATE CURB SIZE & ANCHOR BOLTS WITH MECHANICAL AND EQUIPMENT MANUFACTURER.

## CURB AT VENT OPENING

6 — NOT TO SCALE

## ALUMINUM GRATING SUPPORT DETAIL

5 — NOT TO SCALE

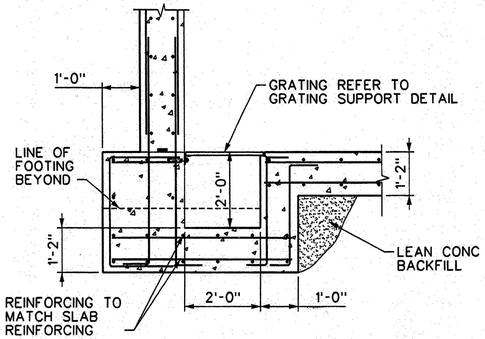


## SUMP PIT SECTION

7 — ½" = 1'-0"

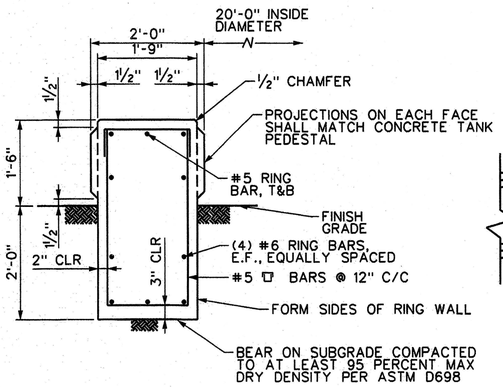


SECTION

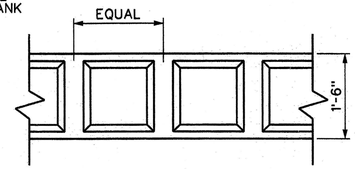


ELEVATION

## LANDSCAPE WALL

8 — ¾" = 1'-0"

1' 0 1' 2' 5'
½"=1'-0"

1' 0 1' 2' 3'
¾"=1'-0"

FREESE AND NICHOLS, INC.
TEXAS REGISTERED ENGINEERING FIRM F-2144
STATE OF TEXAS
MICHAEL KEITH MATSON
59701
PROFESSIONAL ENGINEER
1-18-11
Michael K Matson

FREESE NICHOLS
2220 San Jacinto Blvd. Suite 330
Denton, Tx. 76205
Phone - (940) 387-4500
Fax - (940) 387-4567
Web - www.freese.com

TOWN OF ADDISON, TEXAS
SURVEYOR 1.5 MG EST
CIVIL
STRUCTURAL DETAILS

| NO. | ISSUES | BY | DATE |
|---|---|---|---|

FAM JOB NO. ADD08459
DATE 01/21/11
DESIGNED MRR
DRAWN RJS
REVISED
CHECKED RCK
FILE NAME ST-EST-DT-TYP10.SHT

VERIFY SCALE Bar is one inch on original drawing. If not one inch on this sheet, adjust scale.
0 1"

SHEET ST-01
SEQ.

ST-EST-DT-TYP10.SHT
ST-EST-DT-TYP10.SHT
ST-EST-DT-TYP10.SHT
ST-EST-DT-TYP10.SHT
ST-EST-DT-TYP10.SHT
ST-EST-DT-TYP10.SHT
ST-EST-DT-TYP10.SHT
ST-EST-DT-TYP10.SHT
MicroStation V8 User: KAC Office: Fort Worth 34Border.dgn
ADD08459 N:\IF\Drawings\ST-EST-DT-TYP10.SHT
Plotter: \\Plotter_NAT\FortWorth_2nd_Xerox_Mono_Plotter_WT_Full_Bond.plt
Plot Scale: 1.000 '= 1.000 ' Project: Freese and Nichols, Inc.
Date: 01\18\2011 - 10:15:37 AM
Office: Fort Worth ADD08459 Date: 01\18\2011 - 10:15:37 AM User: KAC File: N:\IF\Drawings\ST-EST-DT-TYP10.SHT

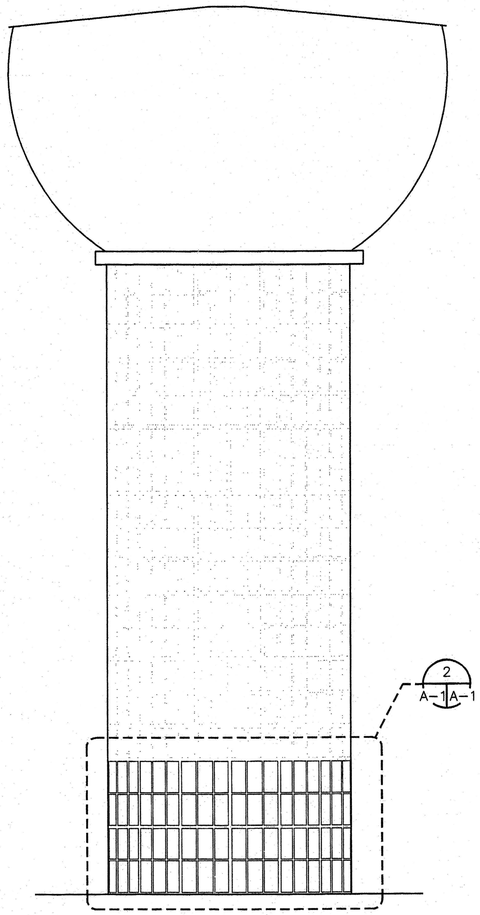


1 A-1|A-1 EXTERIOR ELEVATION 1/16" = 1'-0"

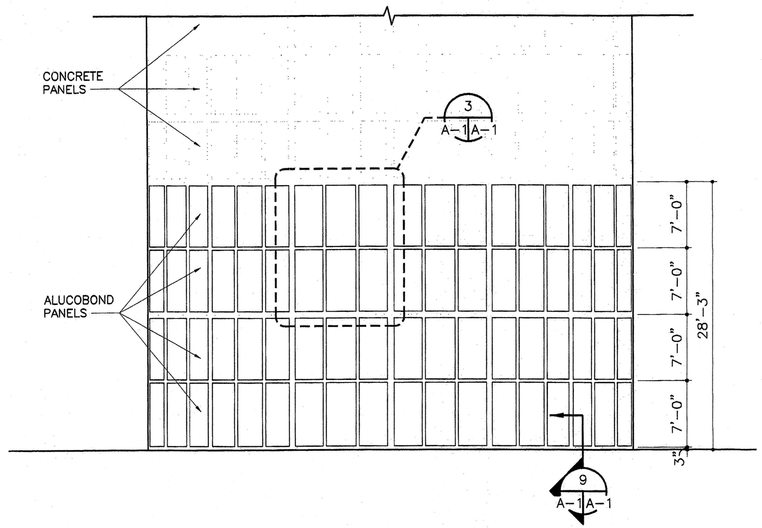


2 A-1|A-1 PARTIAL EXTERIOR ELEVATION 1/8" = 1'-0"

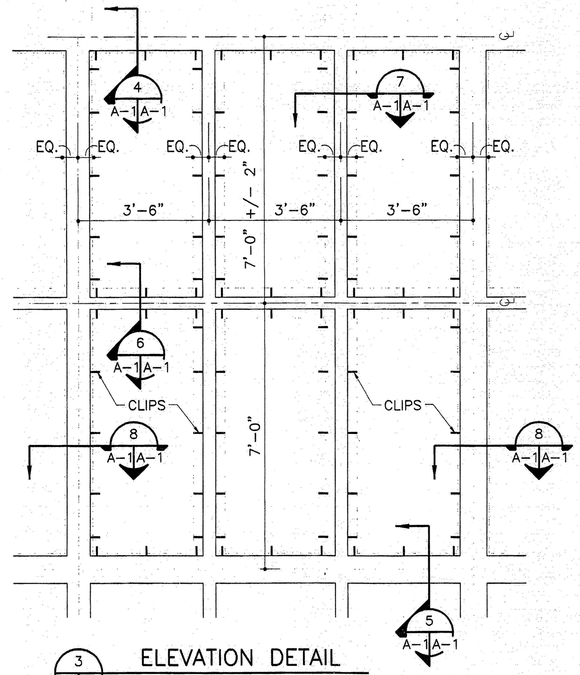


3 A-1|A-1 ELEVATION DETAIL 1/2" = 1'-0"

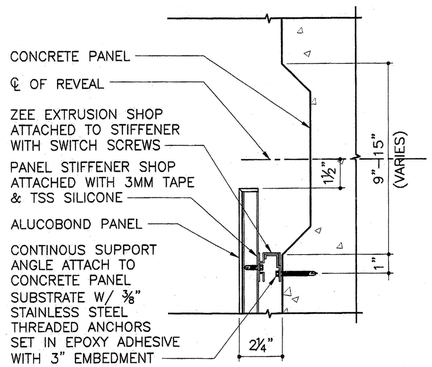


4 AT-01|AT-01 DETAIL AT HORIZONTAL 3"=1'-0"

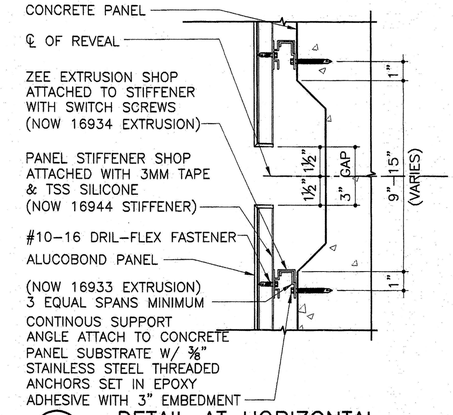


5 AT-01|AT-01 DETAIL AT HORIZONTAL 3"=1'-0"

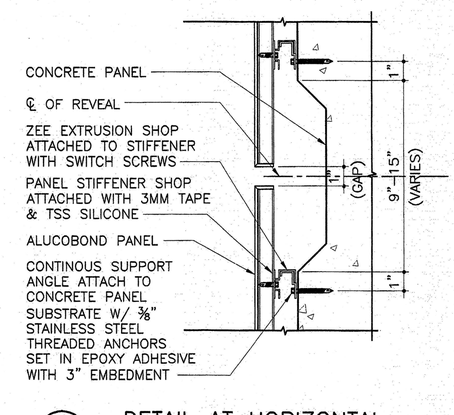


6 AT-01|AT-01 DETAIL AT HORIZONTAL 3"=1'-0"

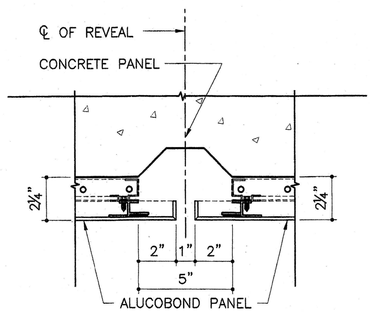


7 AT-01|AT-01 DETAIL AT VERTICAL 3"=1'-0"

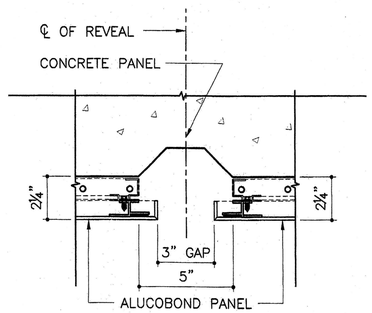


8 AT-01|AT-01 DETAIL AT VERTICAL 3"=1'-0"

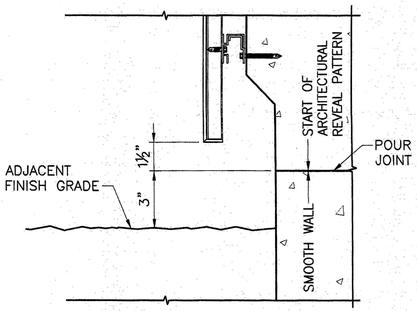


9 AT-01|AT-01 BASE DETAIL 3"=1'-0"

## GENERAL NOTES

1. FIELD VERIFY PANEL LOCATIONS BEFORE FABRICATION.
2. REFER 5/AT-01 FOR PART NUMBERS (TYP).

0 1" 2" 4" 8"
3"=1'-0"
0 1' 2' 4'
1/2"=1'-0"
0 4' 8' 16'
1/8"=1'-0"
0 8' 16' 32'
1/16"=1'-0"

VERIFY SCALE Bar is one inch on original drawing. If not one inch on this sheet, adjust scale.
0 1

Freese and Nichols, Inc.
Texas Registered Engineering Firm F-2144
FREESE NICHOLS
2220 San Jacinto Blvd., Suite 330
Denton, Texas 76205-7588
Phone - (940) 387-4600
Fax - (940) 387-4677

TOWN OF ADDISON, TEXAS

# SURVEYOR 1.5 MG EST

ARCHITECTURE

# EXTERIOR ELEVATIONS AND DETAILS

| FNI JOB NO. | AD00845 |
|---|---|
| DATE | 01/21/11 |
| DESIGNED | - |
| DRAWN | - |
| REVISED | |
| CHECKED | |
| FILE NAME | cv-util-pl-tank2.dwg |

| NO. | ISSUE | BY | DATE |
|---|---|---|---|

SHEET AT-01
SEQ.

ACAD Rel 18.1s (LMS Tech) User: ck
[AD00845g][DTNSRV2] N:\Arc\cv-util-pl-tank2.dwg LAYOUT: Layout1
Jan 14, 2011 - 9:14am PSLTS: 0 TWIST: CLUAU.FREESE.COM
REFERENCES: N:\Arc\34BORDER.DWG LTS: 1
Date: Jan 14, 2011 - 9:14am User: ck File: N:\Arc\cv-util-pl-tank2.dwg

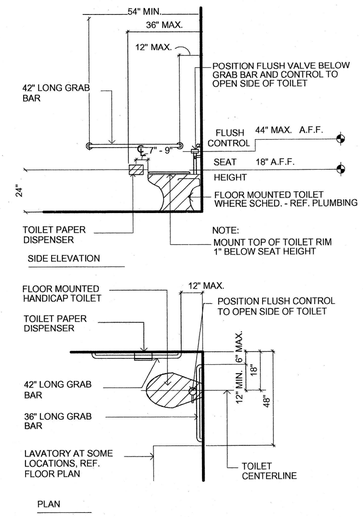


## 1 ACCESSIBLE TOILET WITHOUT STALL

SCALE: 3/8"=1'-0"

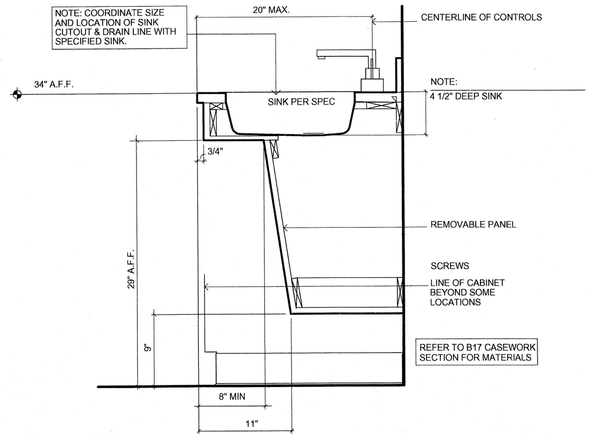


## 2 ACCESSIBLE SINK

SCALE 1 1/2" = 1'- 0"

NOTE: REFER ARCHITECTURAL FLOOR PLANS FOR LOCATION OF ACCESSIBLE SINKS (ACCESSIBLE SINKS ARE INDICATED BY SHADING)

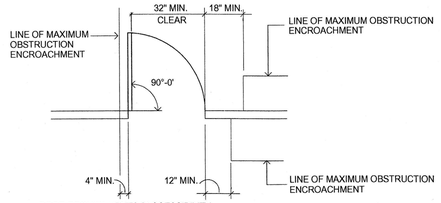


DOOR REQUIREMENTS / ACCESSIBILITY:

1. DOORS ON AN ACCESSIBLE ROUTE MUST BE 36" WIDE MINIMUM TO PROVIDE 32" MINIMUM CLEARANCE. NOTIFY THE ARCHITECT OF CONFLICTS FOR RESOLUTION PRIOR TO CONSTRUCTION.
2. ALL DOOR LOCKSETS, LATCHSETS, AND PANIC HARDWARE SHALL COMPLY WITH TEXAS ACCESSIBILITY STANDARDS, TAS (ADA) STANDARDS 4, 9, AND 13 AND HAVE A MAXIMUM OPERATING FORCE OF 5 LBS. AT INTERIOR DOORS AND 8 LBS. AT EXTERIOR DOORS.
3. MANEUVERING CLEARANCES AT ALL DOORS SHALL COMPLY WITH TEXAS ACCESSIBILITY STANDARDS, AND A.D.A. STANDARDS.

## 3 ACCESSIBLE DOOR DIAGRAM

SCALE: 3/8"=1'-0"

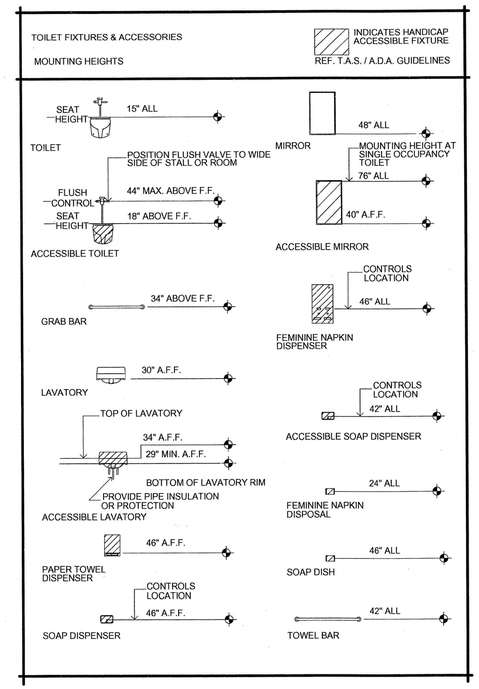


GENERAL NOTE:

DETAILS SHOWN ON THIS SHEET ARE TYPICAL AND APPLY TO WHEREVER CONDITION SHOWN IN DETAIL OCCURS.

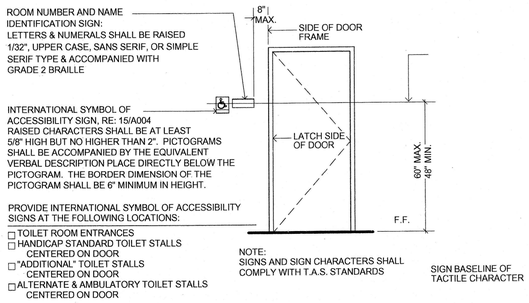


## 4 DOOR / ENTRANCE SIGN

SCALE 3/8" = 1'- 0"

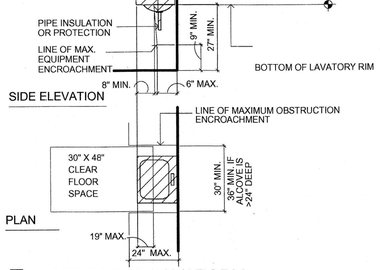


## 5 ACCESSIBLE LAVATORY

SCALE: 3/8"=1'-0"

NOTE: REFER ARCHITECTURAL FLOOR PLANS FOR LOCATION OF ACCESSIBLE FIXTURES (ACCESSIBLE FIXTURES ARE INDICATED BY SHADING)

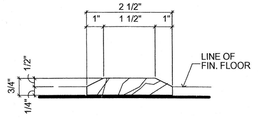


## 6 MARBLE THRESHOLD

SCALE 6" = 1'-0"

## GENERAL DEVICES & ACCESSORIES MOUNTING HEIGHTS

REF. T.A.S. / A.D.A. GUIDELINES

| NAME & DESCRIPTION | | HEIGHT ABOVE FINISHED FLOOR |
|---|---|---|
| LIGHT SWITCHES, THERMOSTATS, WALL MOUNTED COMMUNICATION AND FIRE ALARM PULL DEVICES<br>HEIGHT TO CENTER OF DEVICE | | 48" SIDE APPROACH |
| ELECTRICAL OUTLETS, TELEPHONE OUTLETS, & DATA RECEPTACLES<br>HEIGHT TO CENTER OF OUTLET OR RECEPTACLE | | 15" |
| BUILDING PLAQUE | | 60" |
| FIRE EXTINGUISHER CABINET<br>HEIGHT TO DOOR HANDLE | | 48" |
| ROOM NAME AND/OR ROOM NUMBER SIGNAGE<br>HEIGHT TO BASELINE OF TACTILE CHARACTER<br>NOTE: LOCATE SIGN EDGE WITHIN 8" OF JAMB AT LATCH SIDE OF DOOR | | 60" MAX.<br>48" MIN. |
| DOOR HARDWARE | DOOR KNOB OR LEVER | 38" |
| | DOOR PULL | 42" |
| | PANIC BAR | 38" |

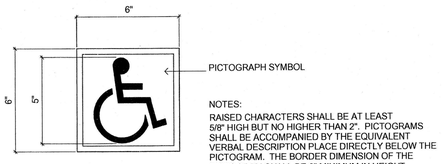


NOTES:

RAISED CHARACTERS SHALL BE AT LEAST 5/8" HIGH BUT NO HIGHER THAN 2". PICTOGRAMS SHALL BE ACCOMPANIED BY THE EQUIVALENT VERBAL DESCRIPTION PLACE DIRECTLY BELOW THE PICTOGRAM. THE BORDER DIMENSION OF THE PICTOGRAM SHALL BE 6" MINIMUM IN HEIGHT.

## 7 INTERNATIONAL SYMBOL OF ACCESSIBILITY

SCALE 3" = 1'- 0"

1/18/2011 3:25:26 PM


WRA Architects, Inc.
13727 Noel Road
Suite 1500
Dallas, Texas 75251
214.720.0011 fax
214.720.0077 tel
www.wraarchitects.com

FREESE NICHOLS
2220 San Jacinto Blvd., Suite 330
Denton, Texas 76205
Phone - (940) 387-4600
Fax - (940) 387-4677
Web - www.freese.com


Town of Addison, Texas
SURVEYOR 1.5 MG EST
ARCHITECTURE
Accessibility

| FAN JOB NO. | ADD08459 |
|---|---|
| DATE | 01/18/11 |
| DESIGNED | SMA |
| DRAWN | SMA |
| REVISED | * |
| CHECKED | * |

DATE | BY | ISSUE | NO. | FILE NAME

VERIFY SCALE Bar is one inch on origianl drawing. If not one inch on this sheet, adjust scale.

0" 1"

SHEET
A-100

# GENERAL NOTES

**1. CONSTRUCTION DOCUMENT COORDINATION:**
- A.) REVIEW ALL DRAWINGS AND SPECIFICATIONS FOR COMPLETE REQUIREMENTS AS COORDINATION IS REQUIRED BETWEEN VARIOUS PORTIONS OF THE WORK. (EXAMPLE: REFER ARCHITECTURAL DRAWINGS FOR LOCATING SOME MECHANICAL, PLUMBING, ELECTRICAL & LIGHTING)
- B.) ANY WORK NOTED AS BY THE GENERAL CONTRACTOR OR BY OTHERS WILL BE ASSIGNED BY THE CONSTRUCTION MANAGER TO THE WORK OF THE TRADE CONTRACTOR GENERALLY PROVIDING THAT TYPE WORK.

**2. ITEMS NOT INCLUDED:**
- A.) REFER TO FLOOR PLAN SYMBOLS LEGEND FOR INDICATIONS ON DRAWINGS.
- B.) ITEMS TYPICALLY PROVIDED BY OWNER:
  - I) LOOSE FURNITURE
  - II) COMPUTER SYSTEMS.

**3. DIMENSIONS:**
- A.) DO NOT SCALE DRAWINGS UNLESS AUTHORIZED BY ARCHITECT FOR SPECIFIC ITEMS.
- B.) DIMENSIONS ARE TYPICALLY SHOWN TO CENTERLINE OF COLUMN, FACE OF METAL STUD (NOT FACE OF DRYWALL), OR FACE OF MASONRY UNLESS SPECIFICALLY NOTED OTHERWISE.
- C.) DIMENSIONS ARE TO BE CAREFULLY REVIEWED BY CONTRACTORS AND DISCREPANCIES REPORTED TO ARCHITECT FOR CORRECTION BEFORE PROCEEDING WITH THE AFFECTED AREA OF THE WORK.
- E.) COORDINATE OPENINGS REQUIRED FOR ITEMS SUCH AS DOORS, WINDOWS, LOUVERS, CASEWORK, ETC. WITH SCHEDULED SIZE.

**4. SCHEDULED ITEMS:**
- A.) FOR ITEMS ON THE SYMBOL LEGEND OR TREATMENT OF THE FOLLOWING TYPICAL ITEMS, REFERENCE THE FOLLOWING INFORMATION:

| | |
|---|---|
| DOORS/ WINDOWS | REFER TO A301 |
| PARTITION TYPE | REFER TO A301 |
| HANDICAP MOUNTING HEIGHTS | REFER TO A100 |
| CASEWORK/ MILLWORK ELEVATIONS | REFER TO A210 |

- B.) KEY BOX TO BE RECESSED (10'-0" AFF) INTO METAL CLADDING AT FRONT ENTRIES OF MAIN BUILDING. CONTACT FIRE MARSHALL FOR PURCHASE REQUIREMENTS, AND TO CONFIRM LOCATIONS.

**5. DRYWALL:**
- A.) PROVIDE MOISTURE RESISTANT GYPSUM BOARD AT PARTITIONS AT ALL TOILET AND SHOWER AREAS.
- B.) ALL GYPSUM BOARD SHALL BE TYPE 'X' EXCEPT AS OTHERWISE REQ'D FOR TESTED ASSEMBLY RATING.
- C.) PROVIDE FIRE TREATED WOOD BLOCKING OR WHERE SPECIFICALLY INDICATED STEEL BACKING PLATES AND HORIZONTAL REINFORCING IN THE WALL FOR ANCHORAGE OF TOILET PARTITIONS, GRAB BARS, WALL CABINETS, AND MARKER OR TACK BOARDS.
- D.) GYPSUM BOARD AS PART OF A FIRE RATED ASSEMBLY IS TO BE EXTENDED AS NECESSARY TO PROVIDE FIRE RATED PROTECTION. CUT GYPSUM BOARD TO A CLOSE FIT TO IRREGULARITIES SUCH AS BAR JOISTS AND SEAL AS REQUIRED FOR FIRE RATINGS.

**6. PENETRATIONS / EXPANSION JOINTS:**
- A.) MECHANICAL PENETRATIONS THRU FIRE RATED PARTITIONS OR FLOORS ARE TO BE PROVIDED WITH FIRE DAMPERS. (REFER TO MECHANICAL DRAWINGS.)
- B.) PENETRATIONS THRU WALLS FLOOR CEILING/ROOF WHICH ARE FIRE RATED (AS NOTED OR SCHEDULED) AR TO BE SEALED AIR TIGHT WITH FIRE RATED SEALANT PER SPECIFICATION.
- C.) 3/8" CONTROL JOINT IN GYPSUM BOARD IS TO BE USG #093. PROVIDE GYPSUM BOARD CONTROL JOINTS ABOVE AND BELOW EACH EDGE OF DOORS/WINDOWS AND AT OTHER LOCATIONS AS INDICATED ON ELEVATIONS AND AS SPECIFIED.

**7. DOORS, WINDOWS, AND GLAZING:** - REFER TO A 301
- A.) HARDWARE: ALL DOOR LOCKSETS SHALL COMPLY WITH T.A.S. (ADA) STANDARDS 4.13.9 AND HAVE A MAXIMUM OPERATING FORCE OF 5 LBS. MAXIMUM. DOOR CLOSER OPENING FORCE SHALL NOT EXCEED 5 LBS. FOR INTERIOR DOORS WHEN MEASURED 30" FROM THE HINGE SIDE OF THE DOOR. SET DOORS AT 8 LBS. FOR EXTERIOR DOORS.
- B.) ALL EXTERIOR WINDOW GLASS (EXCLUDING ENTRY DOORS) IS TO BE 1" DOUBLE GLAZED INSULATED UNITS (TINTED) PER SPECIFICATIONS.

**8. FINISHES:**
- D.) INTERIOR FINISHES:
  - I.) REFER TO "FINISH CODE" ON EACH FLOOR PLANS FOR FINISHES.
  - II.) EXTEND FLOORING OF ROOM INTO CASEWORK KNEESPACE AND TOE SPACES. FINISH REAR WALL OF KNEESPACE TO MATCH WALL FINISH OF ROOM.
  - III.) PAINT - FOR BID DAY PURPOSE ALLOW FOR A MINIMUM OF 6 COLORS FOR WALLS, FURRDOWNS, AND ACCENTS.
  - IV.) CERAMIC TILE - ALLOW FOR ACCENT TILES (AS STIPULATED IN SPECIFICATIONS) TO BE LAID IN A PATTERN PROVIDED BY THE ARCHITECT OR AS INDICATED ON DRAWINGS WHERE SHOWN.
  - V.) PROVIDE RESILIENT TRANSITION STRIP AT ALL CHANGES OF FLOORING TYPE. TRANSITION BETWEEN ROOMS IS TO OCCUR AT THE CLOSED DOOR LOCATION.

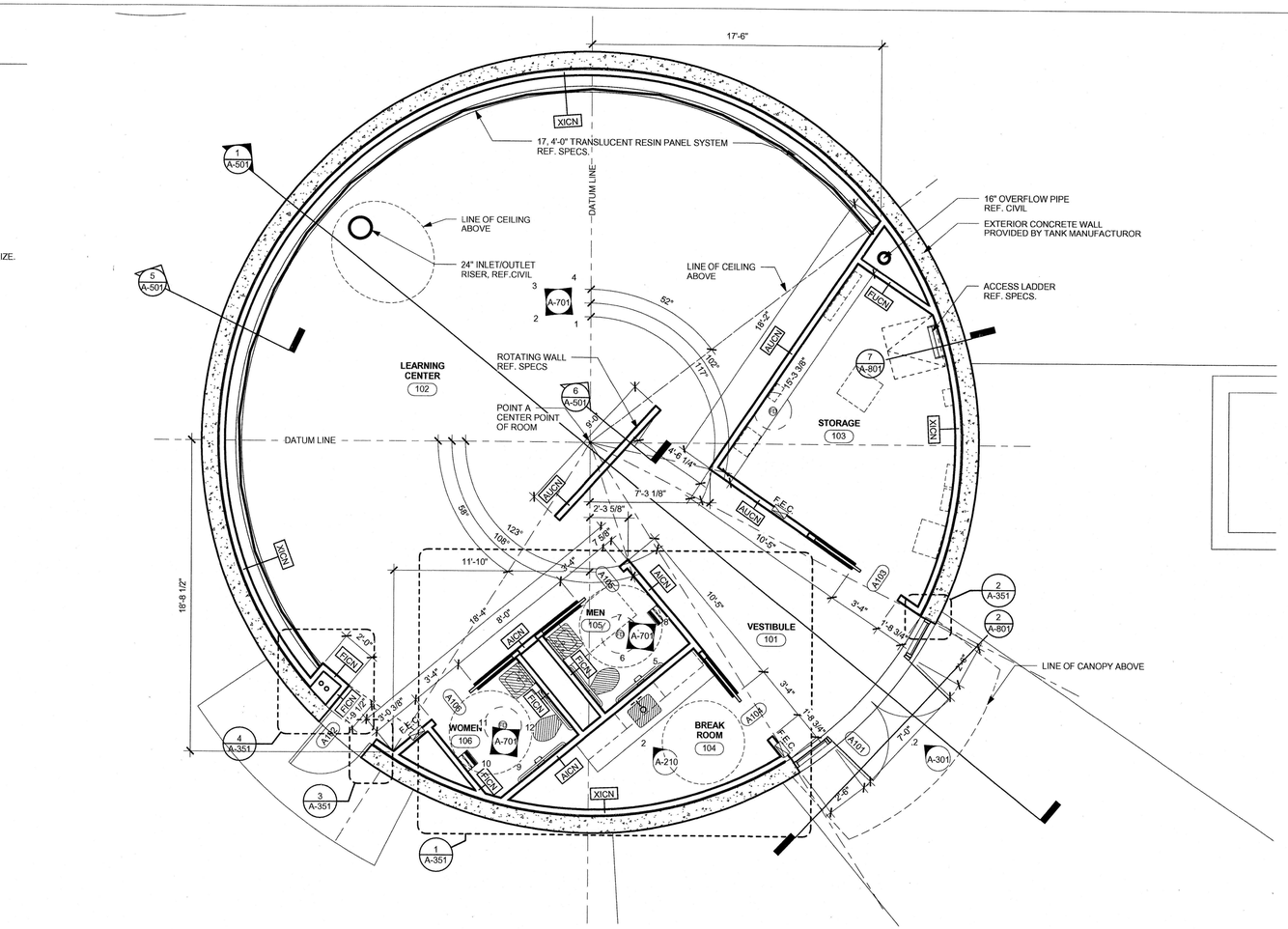


1 Floor Plan - Level 1
1/4" = 1'-0"
PLAN NORTH

## PARTITION SYMBOL LEGEND

XXXX

- Partition type - See schedule sheet A301
- U - Uninsulated
  I - Insulated with 3" Sound Attenuation Batt Insulation Regardless of Cavity Size
- D - Extend wall to underside of structural deck
  C - Top of wall to extend to 12" above finished ceiling height
- N - Non-rated partition
  S - Construction capable of resisting the passage of smoke, run drywall on room side continuous to deck and fire seal.
- 1 - 1 Hour partition
- 2 - 2 Hour partition
- 3 - 3 Hour partition
- 4 - 4 Hour partition

AUDN

## FLOOR PLAN SYMBOLS LEGEND

| | |
|---|---|
| 1 SIM / A101 | Callout Tag |
| A101B | Door Tag |
| X / AXXX | Interior Elevation |
| X / A40X | Exterior Elevation |
| | Floor Drain |
| | Furniture and Equipment, By Owner |
| 1 SIM / A101 | Building Section Tag |
| 1 SIM / A101 | Wall Section Tag |
| X'-X' | Spot Elevation Tag |
| | Centerline |
| ROOM NAME / A101 | Room Tag and Number |
| F.E.C. | Fire Extinguisher Cabinet |

N

0' 2' 4' 8'
1/4"=1'-0"

WRA Architects, Inc.

REGISTERED ARCHITECT STATE OF TEXAS


WRA Architects, Inc.
13277 Merit Drive
Suite #1650
Dallas, Texas 75251
214.750.0377 voice
214.750.3959 fax
www.wraarchitects.com



FREESE NICHOLS
2220 San Jacinto Blvd., Suite 330
Denton, Texas 76205
Phone - (940) 387-4600
Fax - (940) 387-4677
Web - www.freese.com


Town of Addison, Texas
SURVEYOR 1.5 MG EST
ARCHITECTURE

Level 1 Floor Plan

| NO. | ISSUE | BY | DATE |
|---|---|---|---|
| - | - | | |

FILE NAME
CHECKED
REVISED
DRAWN
DESIGNED
DATE
FKN JOB NO.
ADD08459
01/18/11
SMA
SMA

VERIFY SCALE
Bar is one inch on origiant drawing. If not one inch on this sheet, adjus scale.
0 1"

SHEET
A-201

1/18/2011 3:25:57 PM

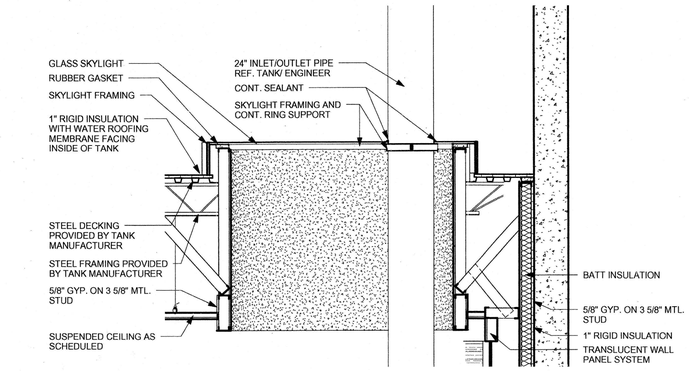


1 Skylight Section
1/2" = 1'-0"

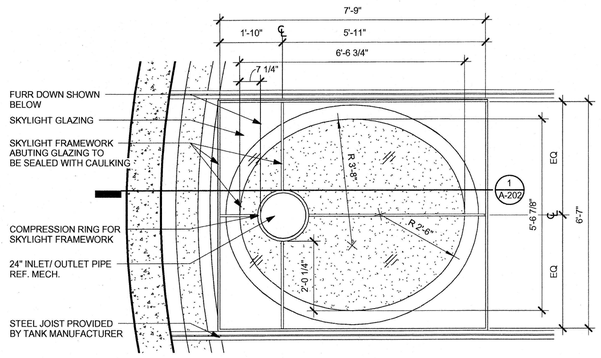


2 Skylight Plan Detail
1/2" = 1'-0"

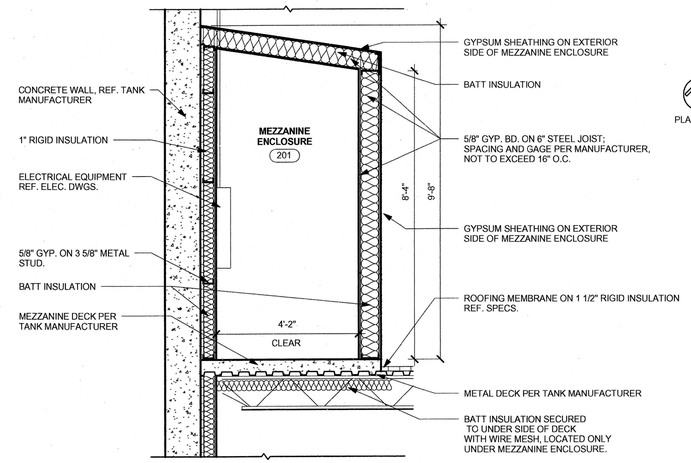


4 Mezzanine Enclosure
1/2" = 1'-0"

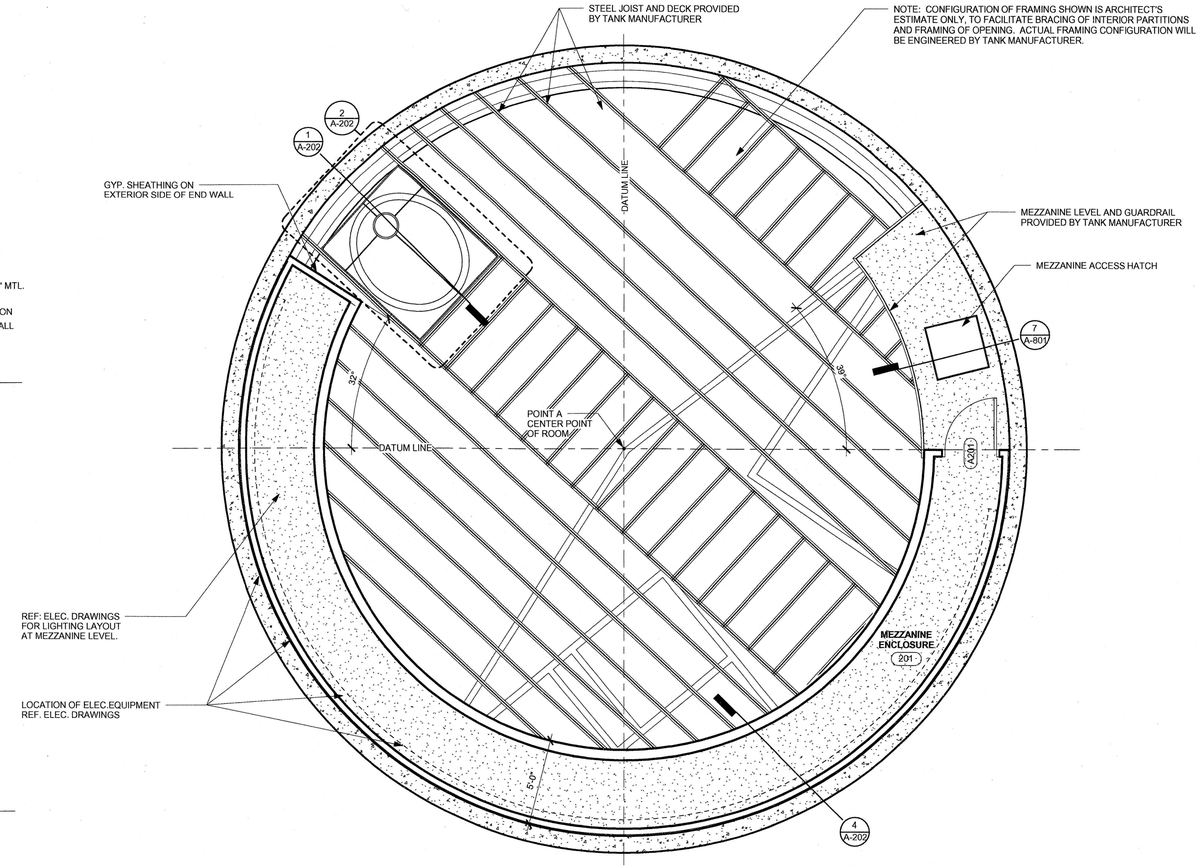


PLAN NORTH

3 Mezzanine Level - Level 2
1/4" = 1'-0"

WRA Architects, Inc.
12377 Merit Drive
Suite 1900
Dallas, Texas 75251
214.750.0077 voice
214.750.0031 fax
www.wraarchitects.com

FREESE NICHOLS
2220 San Jacinto Blvd., Suite 330
Denton, Texas 76205
Phone - (940) 387-4600
Fax - (940) 387-4677
Web - www.freese.com

Town of Addison, Texas
SURVEYOR 1.5 MG EST

ARCHITECTURE

Level 2 - Mezzanine

| NO. | ISSUE | BY | DATE |
|---|---|---|---|

F&N JOB NO. ADD08459
DATE 01/18/11
DESIGNED SMA
DRAWN SMA
REVISED -
CHECKED -
FILE NAME

VERIFY SCALE
Bar is one inch on origianl drawing. If not one inch on this sheet, adjust scale.

SHEET
A-202

1/18/2011 3:26:16 PM

| Finish Schedule | | | | | | | | | |
|---|---|---|---|---|---|---|---|---|---|
| Number | Name | Floor | Base | Wainscot | North Wall | East Wall | South Wall | West Wall | Ceiling |
| 101 | VESTIBULE | Carpet | 4" Resilient Cove | None | Vinyl Wall Covering | Vinyl Wall Covering | Vinyl Wall Covering | Vinyl Wall Covering | Painted Gypsum Board |
| 102 | LEARNING CENTER | Carpet | 4" Resilient Cove | None | Varies, Ref. Elevations | Varies, Ref. Elevations | Varies, Ref. Elevations | Varies, Ref. Elevations | 2 x 2 Lay-in Acoust. - Type 1 (Standard) Black in Black Grid |
| 103 | STORAGE | Sealed Concrete | 4" Resilient Cove | None | Painted Gypsum Board | Painted Gypsum Board | Painted Gypsum Board | Painted Gypsum Board | 2 x 2 Lay-in Acoust. - Type I (Standard) |

| Finish Schedule | | | | | | | | | |
|---|---|---|---|---|---|---|---|---|---|
| Number | Name | Floor | Base | Wainscot | North Wall | East Wall | South Wall | West Wall | Ceiling |
| 104 | BREAK ROOM | Sealed Concrete | 4" Resilient Cove | None | Painted Gypsum Board | Painted Gypsum Board | Painted Gypsum Board | Painted Gypsum Board | 2 x 2 Lay-in Acoust. - Type I (Standard) |
| 105 | MEN | Terrazzo Tile (12" x 12") | Varies; Ref. Elevations | None | Mosaic Ceramic Tile | None | Mosaic Ceramic Tile | Mosaic Ceramic Tile | Painted Gypsum Board |
| 106 | WOMEN | Terrazzo Tile (12" x 12") | Varies; Ref. Elevations | None | Mosaic Ceramic Tile | Mosaic Ceramic Tile | Mosaic Ceramic Tile | Mosaic Ceramic Tile | Painted Gypsum Board |
| 201 | MEZZANINE ENCLOSURE | (none) | (none) | (none) | (none) | (none) | (none) | (none) | (none) |

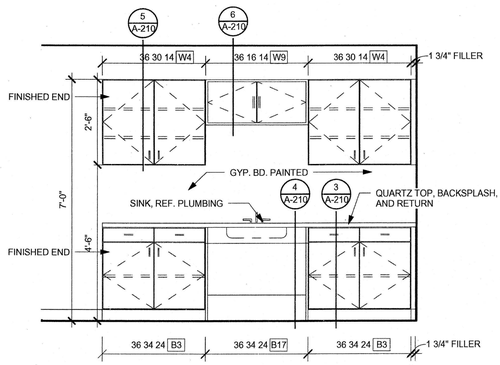


2 Casework Elevation - Breakroom
1/2" = 1'-0"

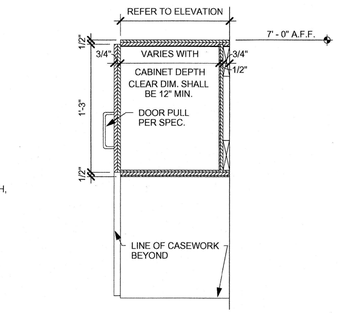


6 W9 CASEWORK SECTION
1 1/2" = 1'-0"

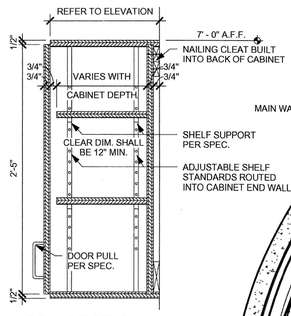


5 W4 CASEWORK SECTION
1 1/2" = 1'-0"

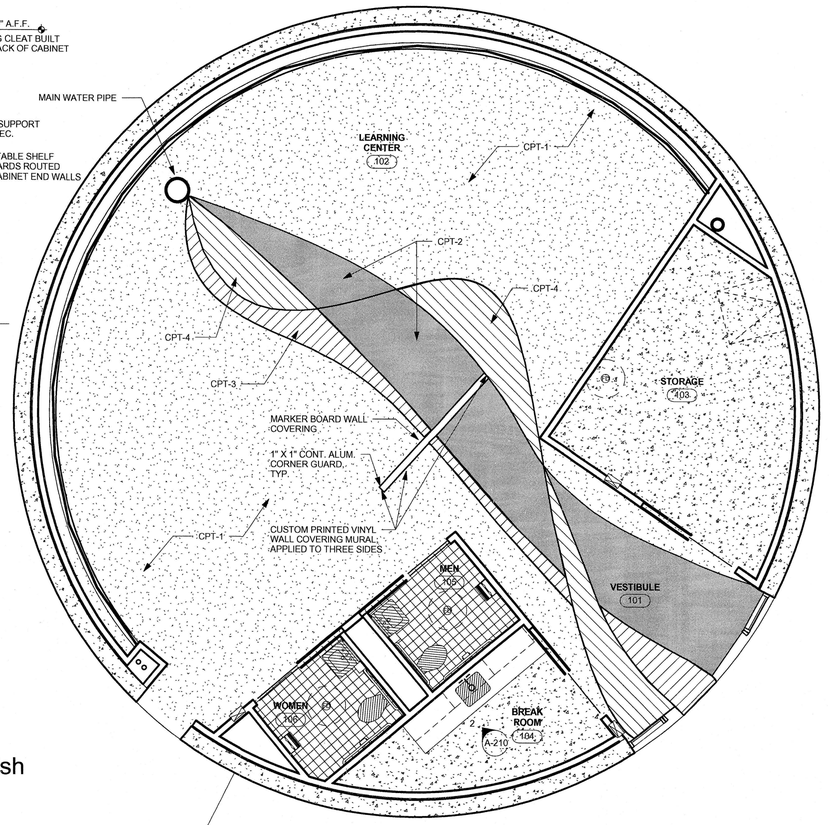


## Floor Finish

- Carpet
- Sealed Concrete
- Terrazzo Tile (12" x 12")

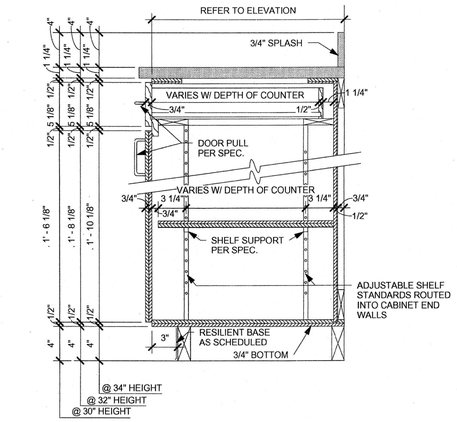


3 B3 CASEWORK SECTION
1 1/2" = 1'-0"

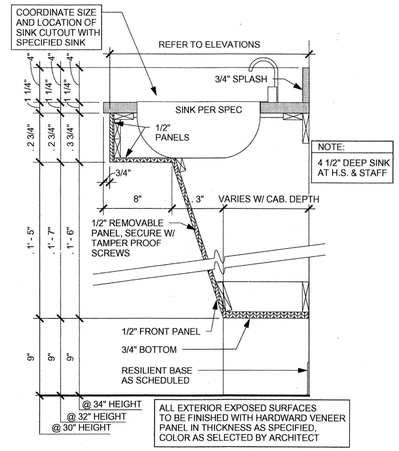


4 B17 CASEWORK SECTION
1 1/2" = 1'-0"

PLAN NORTH

1 Finish Floor Plan - Level 1
1/4" = 1'-0"

N

0' 2' 4' 8'
1/4"=1'-0"

WRA Architects, Inc.

REGISTERED ARCHITECT STATE OF TEXAS 12118


WRA Architects, Inc.
2277 Manor Drive
Suite 1600
Dallas, Texas 75201
214.720.0077 voice
214.720.0078 fax
www.wraarchitects.com



FREESE NICHOLS
2220 San Jacinto Blvd., Suite 330
Denton, Texas 76205
Phone - (940) 387-4600
Fax - (940) 387-4677
Web - www.freese.com


Town of Addison, Texas

# SURVEYOR 1.5 MG EST

ARCHITECTURE

# Level 1 - Finish Floor Plan

| NO. | ISSUE | BY | DATE |
|---|---|---|---|
| | | | |

VERIFY SCALE
Bar is one inch on origiant drawing. If not one inch on this sheet, adjust scale.

| FAN-JOB NO. | ADD08459 |
|---|---|
| DATE | 01/18/11 |
| DESIGNED | SMA |
| DRAWN | SMA |
| REVISED | - |
| CHECKED | - |
| FILE NAME | |

SHEET
A-210

1/18/2011 3:30:15 PM

## Door Schedule

| Arch No. | Ext. | S / PR. | Width | Height | Thickness | Fire Label | Frame Mat. | Frame Type | Jamb Depth | Head | Jamb | Door Mat. | Door Type | HDW. | Comments |
|---|---|---|---|---|---|---|---|---|---|---|---|---|---|---|---|
| A101 | Yes | PR | 6'-8" | 7' - 10" | 2" | | Alum. | H2 | | 12/A301 | 13/A301 | Alum | B | Set 10.10.73 | |
| A102 | Yes | S | 3'-0" | 7' - 0" | 1 3/4" | | H.M. | H1 | 5 7/8" | 13/A301 | 13A301 | H.M. | A | Set 26.00.73 | |
| A103 | No | S | 3'-4" | 7' - 0" | 1 3/4" | | Wd. | - | 6 1/2" | 8/A301 | 9/A301 | Wd. | A | Set 96.30.00 | |
| A104 | No | S | 3'-4" | 7' - 0" | 1 3/4" | | Wd. | - | 6 1/2" | 8/A301 | 9/A301 | Wd. | A | Set 96.30.00 | |
| A105 | No | S | 3'-4" | 7' - 0" | 1 3/4" | | Wd. | - | 6 1/2" | 8/A301 | 9/A301 | Wd. | A | Set 96.60.00 | |
| A106 | No | S | 3'-4" | 7' - 0" | 1 3/4" | | Wd. | - | 6 1/2" | 8/A301 | 9/A301 | Wd. | A | Set 96.60.00 | |
| A201 | No | S | 3'-0" | 7' - 0" | 1 3/4" | | H.M. | - | 5 7/8" | 3/A301 | 4/A301 | H.M. | A | Set 26.40.01 | |

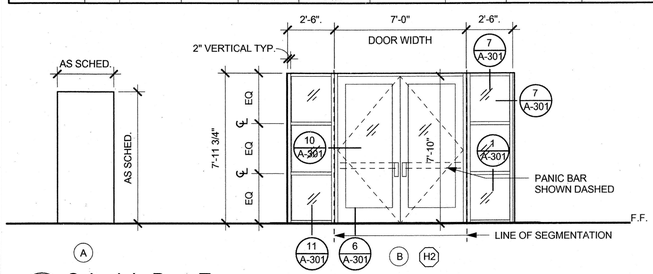


## 2 Schedule Door Type
1/4" = 1'-0"

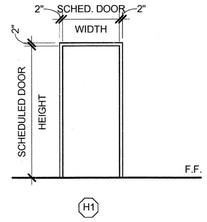


## 3 Hollow Metal Frame Type
1/4" = 1'-0"

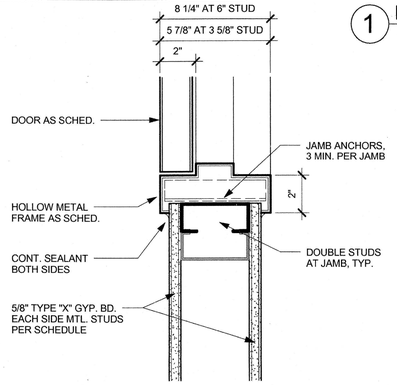


## 4 Int. H.M. Door Jamb at Metal Stud
3" = 1'-0"

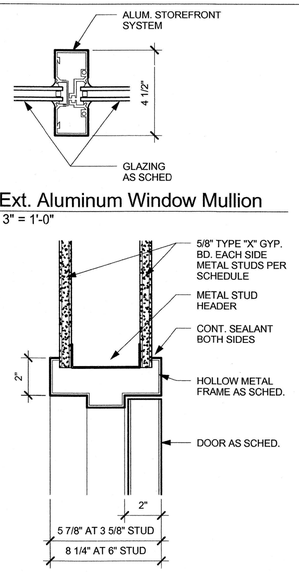


## 1 Ext. Aluminum Window Mullion
3" = 1'-0"




## 5 Int. H.M. Door Head at Metal Stud
3" = 1'-0"

## PARTITION HEAD DETAIL SCHEDULE

| TYPE | DESCRIPTION |
|---|---|
| CN | BRACE TO STRUCTURE ABOVE AS REQUIRED<br>ACOUSTICAL BATTS WHERE SCHEDULED<br>LAY-IN CEILING<br>PARTITION AS SCHEDULED |

## PARTITION SCHEDULE

| TYPE | WALL THICKNESS | DESCRIPTION | U.L. DESIGN NUMBER WHERE SCHEDULED |
|---|---|---|---|
| A 3 5/8" STUDS<br>B 6" STUDS | 4 7/8"<br>7 1/4" | 1 LAYER OF 5/8" GYPSUM BOARD<br>PARTITION TYPE A - 3 5/8" METAL STUDS AT 16" O.C.<br>PARTITION TYPE B - 6" METAL STUDS AT 16" O.C.<br>1 LAYER OF 5/8" GYPSUM BOARD | U465 - 1HR |
| F 3 5/8" STUDS<br>G 6" STUDS | 4 1/4"<br>6 5/8" | METAL STUDS AT 16" O.C.<br>2 LAYERS OF 5/8" GYPSUM BOARD | |
| X | 5 7/8" | 1" VERTICAL Z-FURRING @ 16" O.C. HORIZONTALLY<br>TYPE 'X': EXTERIOR CONCRETE WALL<br>1 LAYER OF 5/8" GYPSUM BOARD<br>1" RIGID INSULATION WHERE SCHEDULED<br>METAL STUDS AT 16" O.C. | |

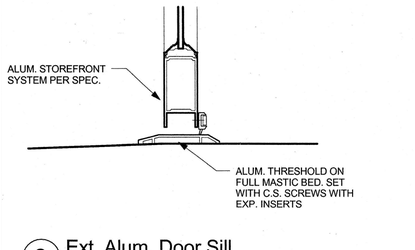


## 6 Ext. Alum. Door Sill
3" = 1'-0"

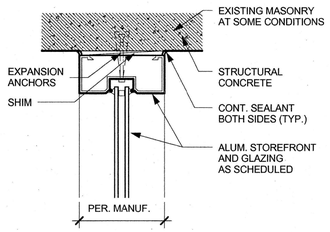


## 7 Aluminum Window Head/Jamb
3" = 1'-0"

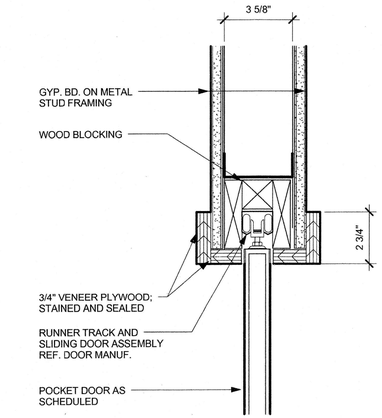


## 8 Pocket Door Head
3" = 1'-0"

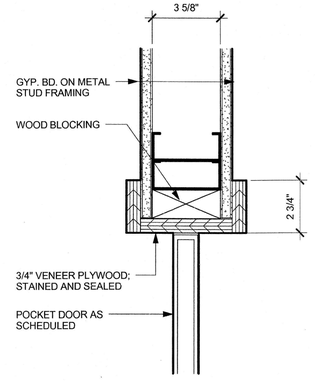


## 9 Pocket Door Jamb
3" = 1'-0"

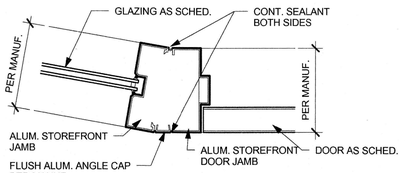


## 10 Ext. Alum. Angle Window Mullion
3" = 1'-0"

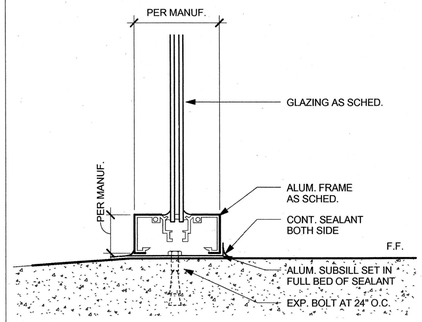


## 11 Ext. Aluminum Storefront Sill
3" = 1'-0"

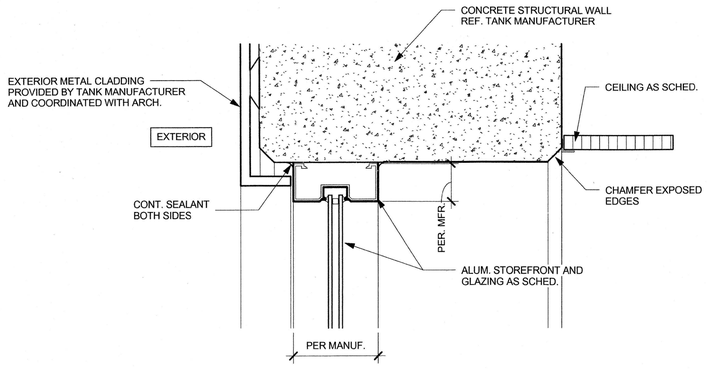


## 12 Ext. Alum. Window Head (Jamb Sim.) - Concrete
3" = 1'-0"

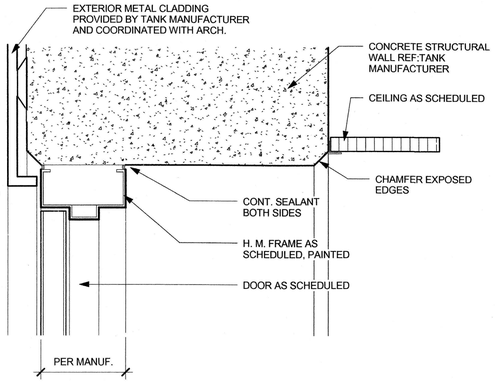


## 13 Ext. H.M. Door Head (Jamb Sim.) - Concrete
3" = 1'-0"

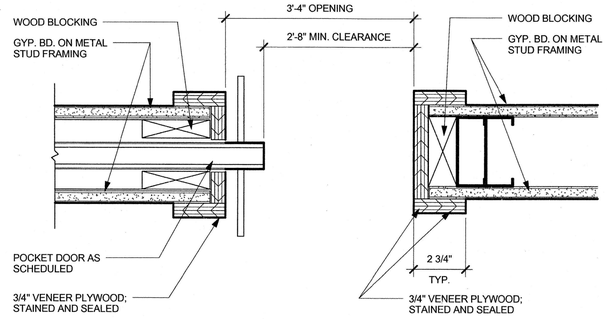


## 14 Pocket Door Closing Detail
3" = 1'-0"


WRA Architects, Inc.
WRA Architects, Inc.
12377 Merit Drive
Suite 1600
Dallas, Texas 75251
214.750.6000 phone
214.750.6001 fax
www.wraarchitects.com



FREESE NICHOLS
2220 San Jacinto Blvd., Suite 330
Denton, Texas 76205
Phone - (940) 387-4600
Fax - (940) 387-4677
Web - www.freese.com


REGISTERED ARCHITECT STATE OF TEXAS 12158

Town of Addison, Texas
SURVEYOR 1.5 MG EST
ELEVATED STORAGE TANK
ARCHITECTURE

Door Schedules/ Details

| NO. | ISSUE | BY | DATE |
|---|---|---|---|

FAN JOB NO. ADD08459
DATE 01/18/11
DESIGNED SMA
DRAWN SMA
REVISED -
CHECKED -
FILE NAME

VERIFY SCALE Bar is one inch on origianl drawing. If not one inch on this sheet, adjust scale.
0 1"

SHEET
A-301

1/19/2011 9:09:07 AM

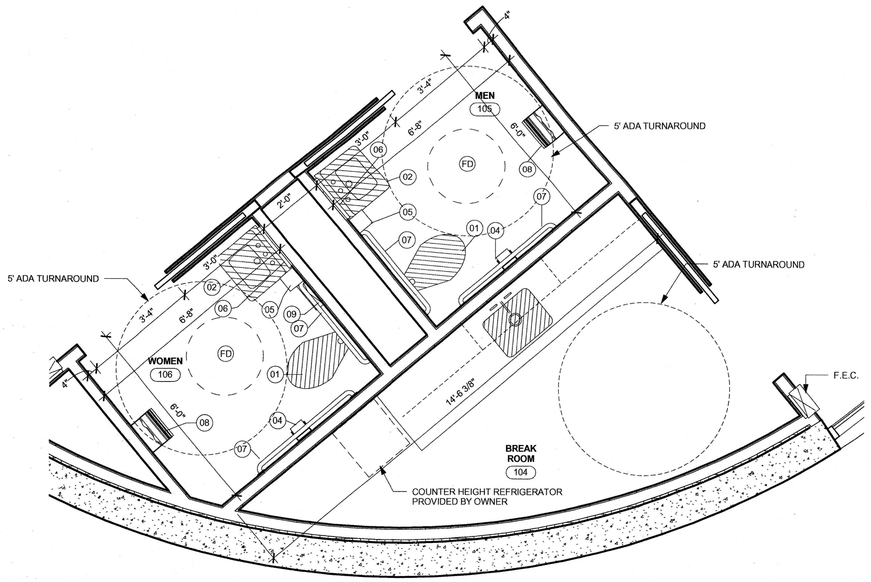


1 Enlarged Restroom Plan
1/2" = 1'-0"

## TOILET FIXTURES AND ACCESSORIES SCHEDULE

| | |
|---|---|
| 01 | ACCESSIBLE WATER CLOSET (SHADED) |
| 02 | ACCESSIBLE LAVATORY (SHADED) |
| 03 | ACCESSIBLE SINK |
| 04 | TOILET PAPER DISPENSER |
| 05 | SOAP DISPENSER |
| 06 | ACCESSIBLE MIRROR 18" W x 42" H |
| 07 | GRAB BARS |
| 08 | ELECTRIC HAND DRYER |
| 09 | FEMININE NAPKIN DISPOSAL |

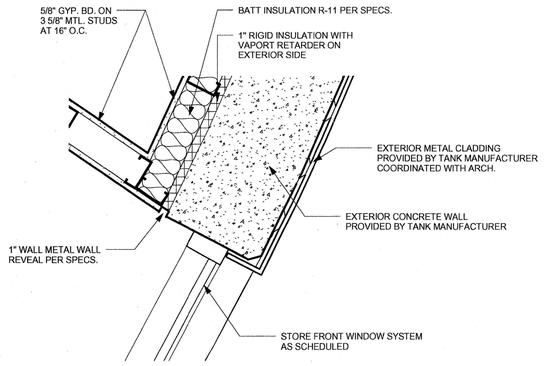


2 Plan Detail - 1
1 1/2" = 1'-0"

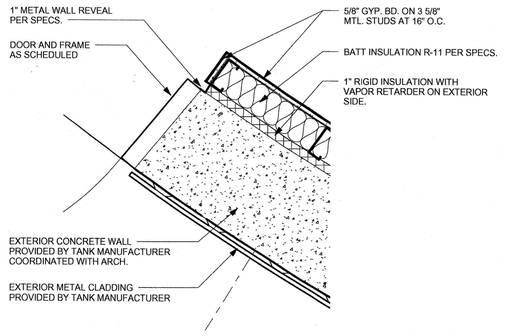


3 Plan Detail - 2
1 1/2" = 1'-0"

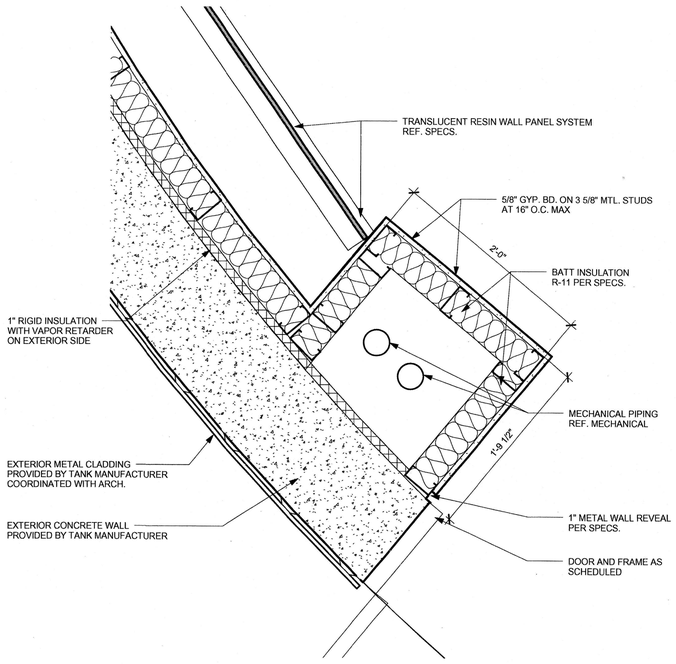


4 Plan Detail - 3
1 1/2" = 1'-0"

WRA Architects, Inc.

WRA Architects, Inc.
12377 Merit Drive
Suite 1800
Dallas, Texas 75251
214.750.0077 voice
214.750.0091 fax
www.wraarchitects.com

REGISTERED ARCHITECT
STATE OF TEXAS
10135

FREESE NICHOLS
2220 San Jacinto Blvd., Suite 330
Denton, Texas 76205
Phone - (940) 387-4600
Fax - (940) 387-4677
Web - www.freese.com

Town of Addison, Texas
SURVEYOR 1.5 MG EST

ARCHITECTURE

Plan Details

| NO. | ISSUE | BY | DATE |
|---|---|---|---|

F&N JOB NO. ADD08459
DATE 01/18/11
DESIGNED SMA
DRAWN SMA
REVISED -
CHECKED -
FILE NAME

VERIFY SCALE 0 1
Bar is one inch on origianl drawing. If not one inch on this sheet, adjust scale.

SHEET
A-351

1/18/2011 3:27:46 PM

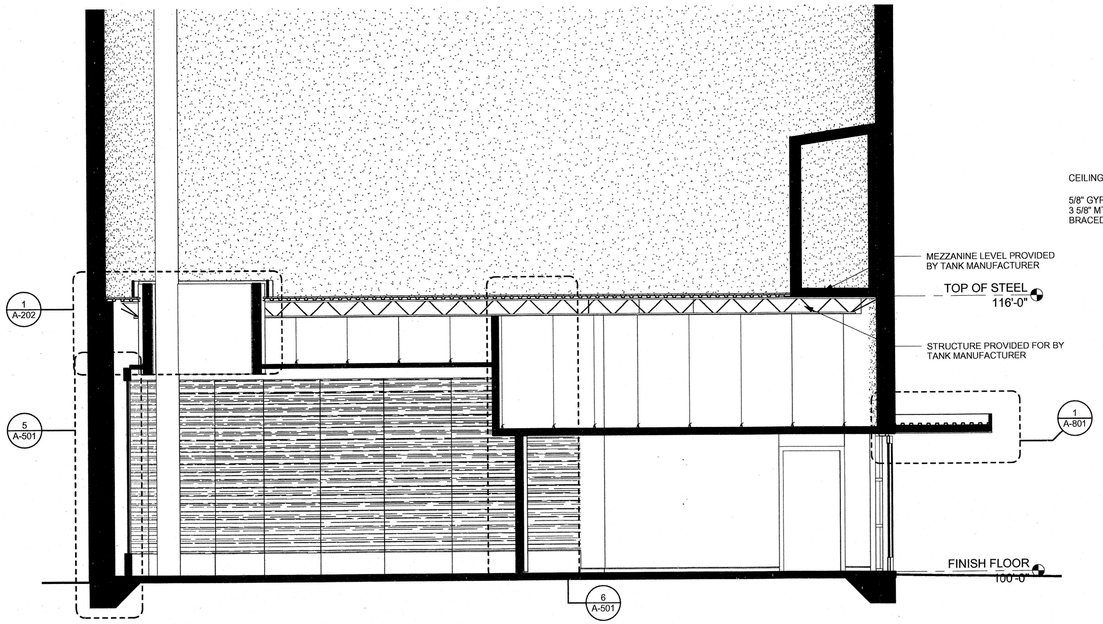


1 Building Section
1/4" = 1'-0"

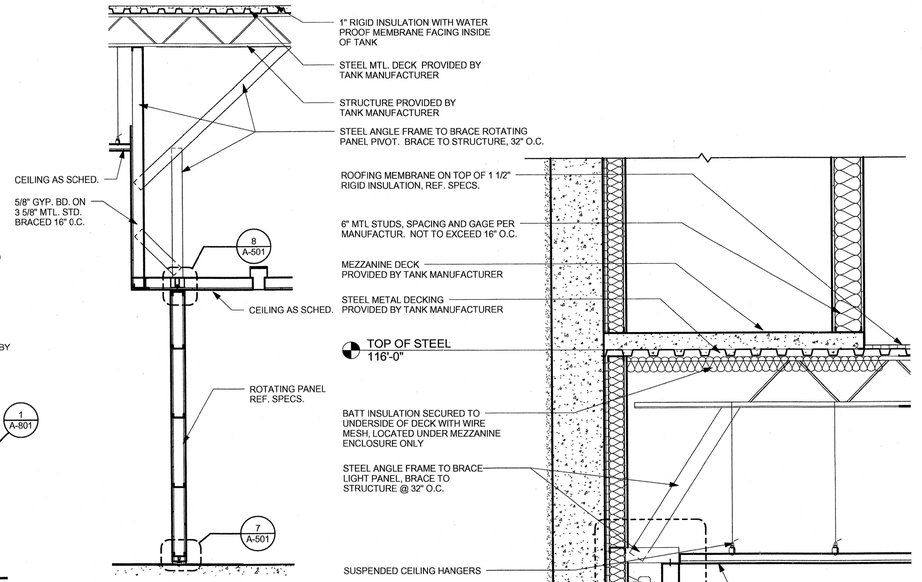


6 Rotating Wall Section
1/2" = 1'-0"

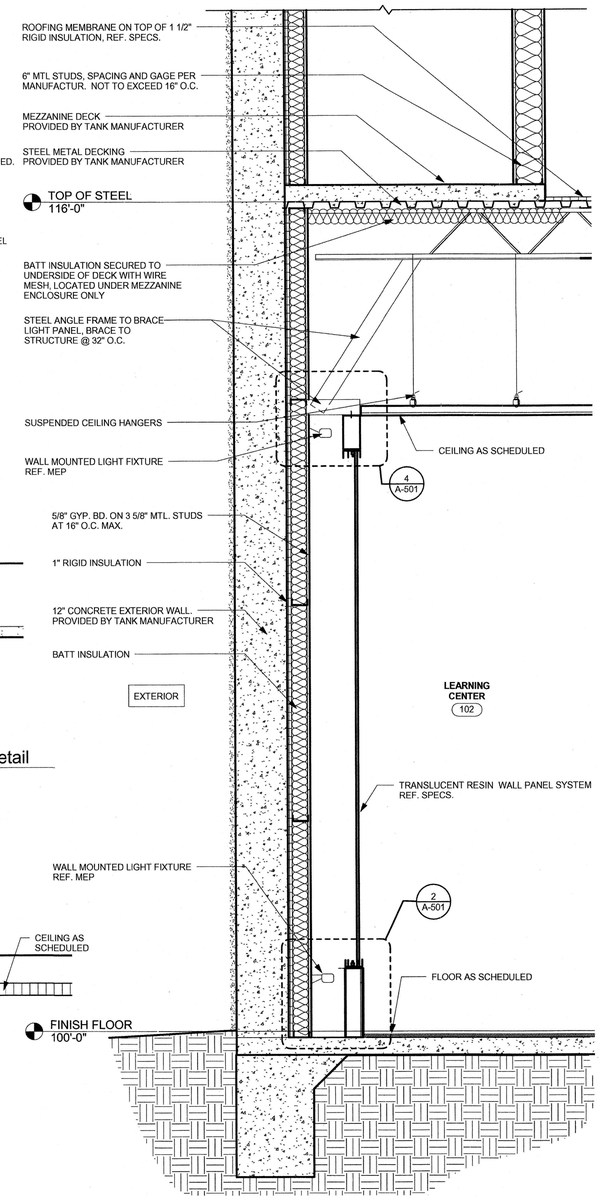


5 Wall Section 1
3/4" = 1'-0"

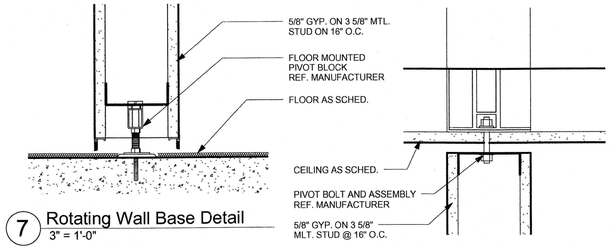


7 Rotating Wall Base Detail
3" = 1'-0"




8 Rotating Wall Head Detail
3" = 1'-0"

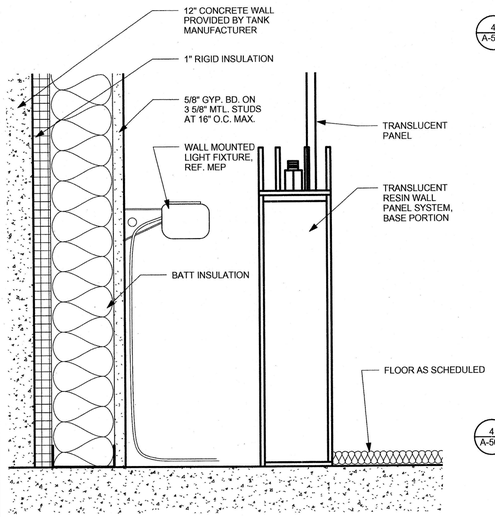


2 Wall Section Detail - 2
3" = 1'-0"

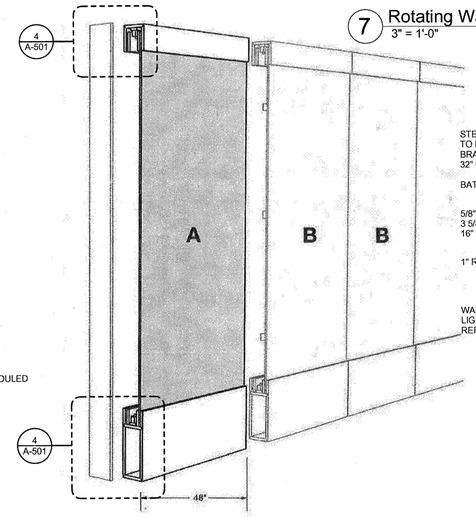


3 Light Wall Perspective
12" = 1'-0"

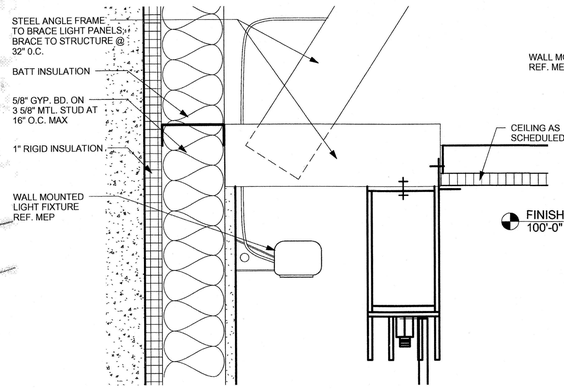


4 Wall Section Detail -1
3" = 1'-0"

1/18/2011 3:28:11 PM

WRA Architects, Inc.
WRA Architects, Inc.
12377 Merit Drive
Suite 1600
Dallas, Texas 75251
214.432.8282 phone
214.750.8931 fax
www.wraarchitects.com

REGISTERED ARCHITECT STATE OF TEXAS 12116

FREESE NICHOLS
2220 San Jacinto Blvd., Suite 330
Denton, Texas 76205
Phone - (940) 387-4600
Fax - (940) 387-4677
Web - www.freese.com

Town of Addison, Texas
SURVEYOR 1.5 MG EST
ARCHITECTURE

# Wall Sections

| FNI JOB NO. | A0D08459 |
|---|---|
| DATE | 01/18/11 |
| DESIGNED | SMA |
| DRAWN | SMA |
| REVISED | * |
| CHECKED | * |

DATE | BY | ISSUE | NO

FILE NAME

Bar is one inch on original drawing. If not one inch on this sheet, adjust scale.

VERIFY SCALE 0 1"

SHEET
A-501

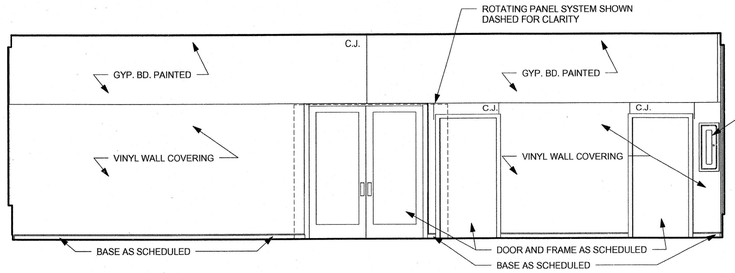


1 Interior Elevation 1-A
1/4" = 1'-0"

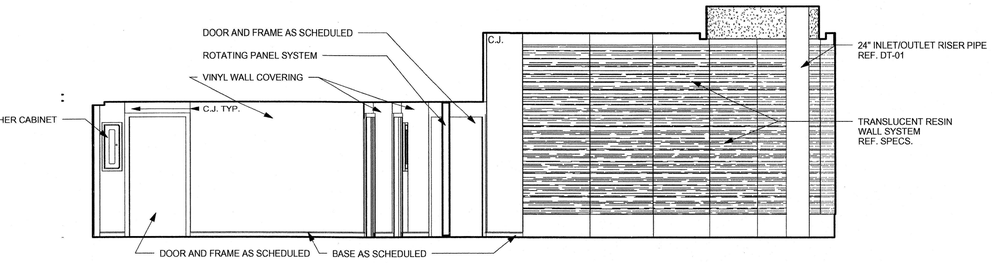


2 Interior Elevation 1 - B
1/4" = 1'-0"

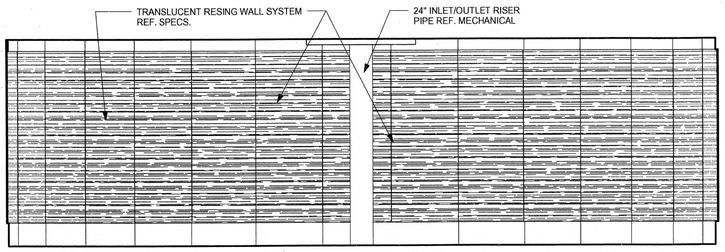


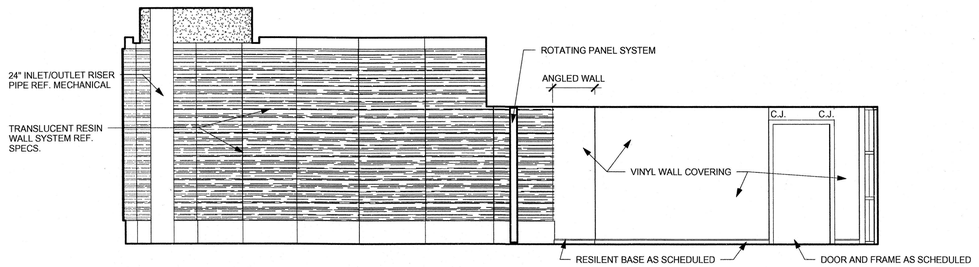


3 Interior Elevation 1 - C
1/4" = 1'-0"

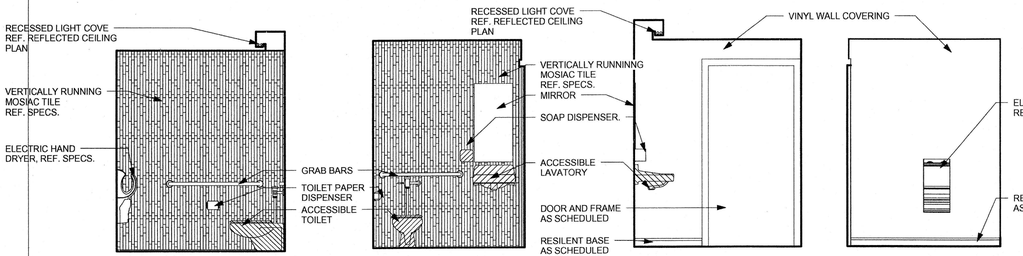


4 Interior Elevation 1 - D
1/4" = 1'-0"

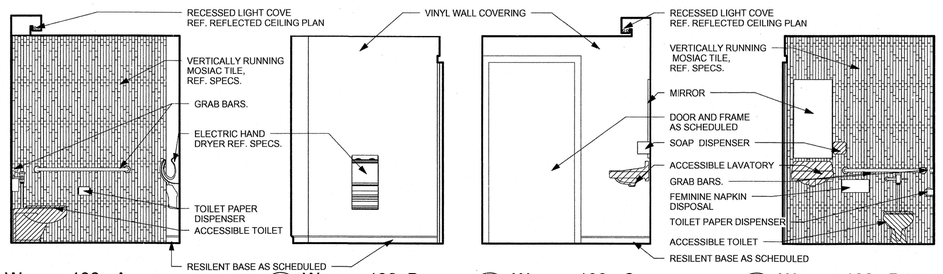


5 Men 105 - A
3/8" = 1'-0"

6 Men 105 - B
3/8" = 1'-0"

7 Men 105 - C
3/8" = 1'-0"

8 Men 105 - D
3/8" = 1'-0"

9 Women 106 - A
3/8" = 1'-0"

10 Women 106 -B
3/8" = 1'-0"

11 Women 106 - C
3/8" = 1'-0"

12 Women 106 - D
3/8" = 1'-0"

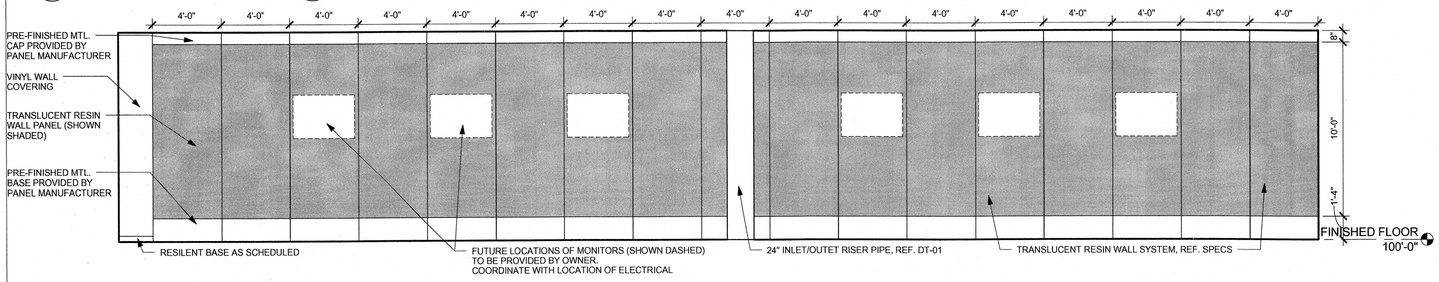


13 Interior Elevation - Panel Layout (SEGMENTED CURVED WALL DRAWN FLAT)
1/4" = 1'-0"

1/18/2011 3:28:45 PM

WRA Architects, Inc.
WRA Architects, Inc.
13277 Merit Drive
Suite 1600
Dallas, Texas 75251
214.750.0077 voice
214.750.0078 fax
www.wraarchitects.com
FREESE NICHOLS
2220 San Jacinto Blvd., Suite 330
Denton, Texas 76205
Phone - (940) 387-4600
Fax - (940) 387-4677
Web - www.freese.com

REGISTERED ARCHITECT STATE OF TEXAS

Town of Addison, Texas
SURVEYOR 1.5 MG EST
ARCHITECTURE
Interior Elevations

| NO. | ISSUE | BY | DATE |
|---|---|---|---|
| | | | |

FAN JOB NO. ADD08459
DATE 01/18/11
DESIGNED SMA
DRAWN SMA
REVISED -
CHECKED -
FILE NAME

VERIFY SCALE Bar is one inch on origianl drawing. If not one inch on this sheet, adjust scale.

SHEET
A-701

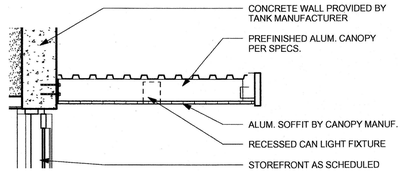


1 Canopy Detail
1/2" = 1'-0"

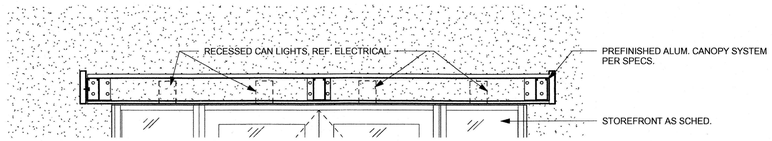


2 Canopy Detail 2
1/2" = 1'-0"

## REFLECTED CEILING PLAN LEGEND

- SURFACE MOUNTED LIGHT FIXTURE - REF. ELEC.
- RECESSED DOWN LIGHT FIXTURE - REF. ELEC.
- RECESSED DOWN LIGHT FIXTURE - REF. ELEC. (EMERGENCY CIRCUIT)
- CEILING MOUNTED EXIT LIGHT - REF. ELEC.
- SPEAKER LOCATION - REF. ELEC.
- FIRE HORN, ALARM, AND STROBE
- FIRE STROBE
- PROJECTOR, BY OWNER
- PROJECTOR SCREEN
- RECESSED DOWN LIGHT FIXTURE - WALL WASHER- REF. ELEC.
- SMOKE DETECTOR
- H.V.A.C. DIFFUSER - REF. MECH.
- H.V.A.C. RETURN AIR GRILLE - REF. MECH.
- ROOF ACCESS HATCH
- 2' X 2' LAY-IN CEILING AND GRID
- GYP. BOARD CEILING, TAPE, BED, TEXTURE AND PAINT
- GYP. BOARD CEILING WITH ACOUSTICAL CEILING ABOVE; TAPE, BED, TEXTURE AND PAINT
- STUCCO/PLASTER,TEXTURE AND PAINT
- X'-XX" A.F.F. CEILING HEIGHT ABOVE FINISH FLOOR

NOTE: SYMBOLS ARE TYPICAL; ALL MAY NOT BE APPLICABLE

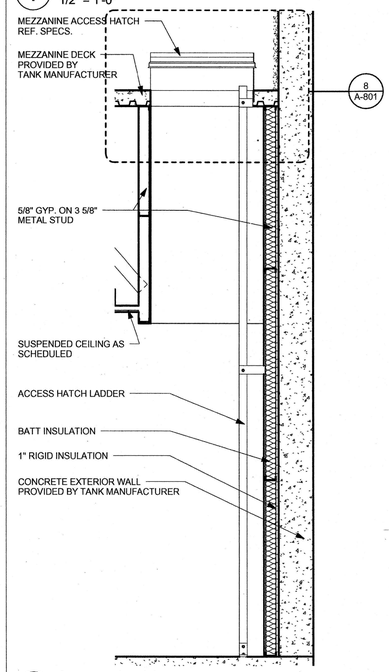


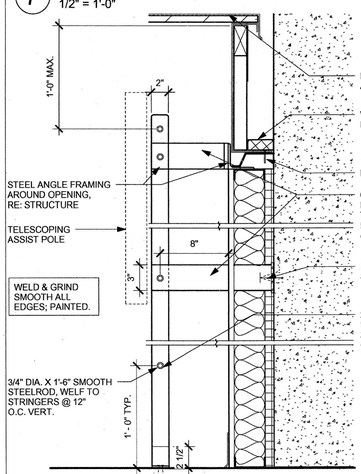


7 Access Ladder
1/2" = 1'-0"

8 Access Hatch Detail
1 1/2" = 1'-0"

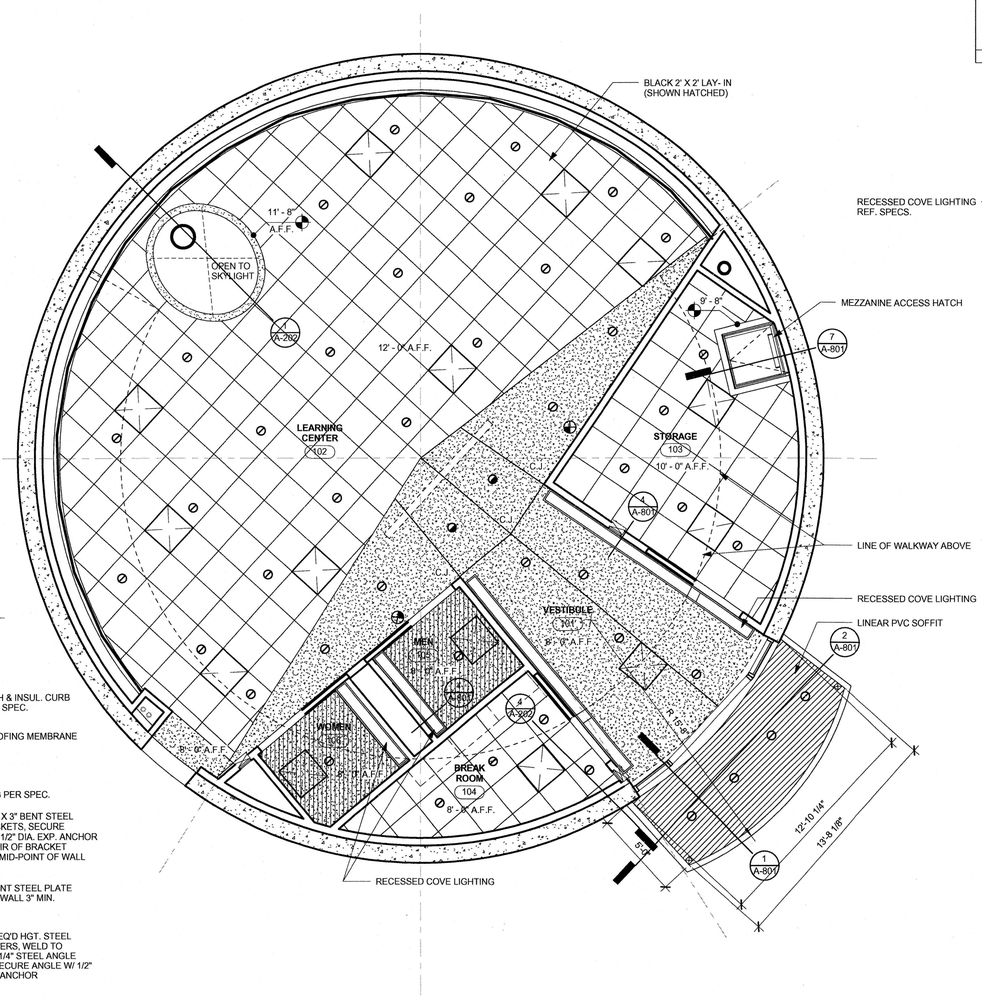


PLAN NORTH

3 Reflected Ceiling Plan - Level 1
1/4" = 1'-0"

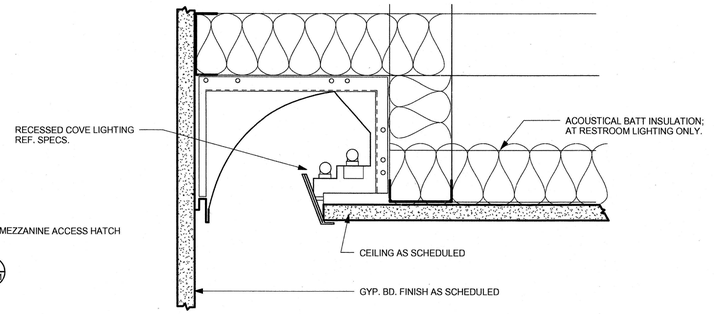


4 Recessed Cove Lighting
3" = 1'-0"

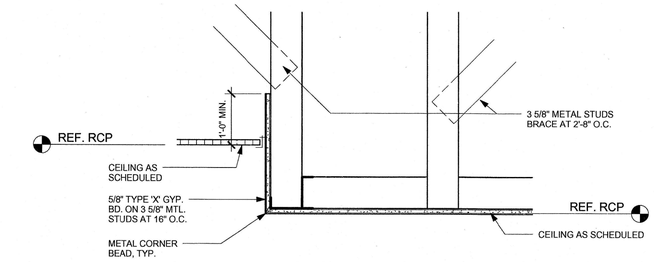


5 Furr Down Detail
1 1/2" = 1'-0"

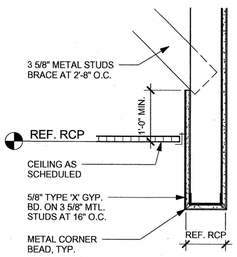


6 Furr Down Detail 2
1 1/2" = 1'-0"

N

0' 2' 4' 8'
1/4"=1'-0"

WRA Architects, Inc.
12377 Merit Drive
Suite 1700
Dallas, Texas 75251
214.780.0077 voice
214.780.0076 fax
www.wraarchitects.com

REGISTERED ARCHITECT - SKYLER MICHAEL WRIGHT - STATE OF TEXAS - 19218

FREESE NICHOLS
2220 San Jacinto Blvd., Suite 330
Denton, Texas 76205
Phone - (940) 387-4600
Fax - (940) 387-4677
Web - www.freese.com

Town of Addison, Texas
SURVEYOR 1.5 MG EST
ARCHITECTURE
Level 1 - R.C. Plan

| FNI JOB NO. | A0D08459 |
|---|---|
| DATE | 01/18/11 |
| DESIGNED | SMA |
| DRAWN | SMA |
| REVISED | - |
| CHECKED | - |

| NO. | ISSUE | BY | DATE | FILE NAME |
|---|---|---|---|---|

VERIFY SCALE Bar is one inch on origianl drawing. If not one inch on this sheet, adjust scale.

SHEET
A-801

1/18/2011 3:29:10 PM

# MEP ABBREVIATIONS

| | |
|---|---|
| ABV. | ABOVE |
| AC | ALTERNATING CURRENT |
| A/C | AIR CONDITIONER |
| AFC | ABOVE FINISHED CEILING |
| AFF | ABOVE FINISHED FLOOR |
| AFG | ABOVE FINISHED GRADE |
| AG | ABOVE GRADE AND GFI |
| AHAP | AS HIGH AS POSSIBLE |
| AHU | AIR HANDLING UNIT |
| ALT. | ALTERNATE |
| AMB. | AMBIENT TEMPERATURE (°F) |
| AMP. | AMPERE |
| APPROX. | APPROXIMATELY |
| ARCH. | ARCHITECTURAL |
| AVG. | AVERAGE |
| B | BOILER |
| B.G. | BELOW GRADE |
| BMS | BUILDING MANAGEMENT SYSTEM |
| BRD | BAROMETRIC RELIEF DAMPER |
| BTU | BRITISH THERMAL UNIT |
| CD | CONSTRUCTION DOCUMENTS |
| CFH | CUBIC FEET PER HOUR |
| CFM | CUBIC FEET PER MINUTE |
| CH | CHILLER |
| CHEM. | CHEMICAL |
| CHP | CHILLED WATER PUMP |
| CKT. | CIRCUIT |
| CLG. | CEILING |
| CMPR. | COMPRESSOR |
| CT | COOLING TOWER |
| CWP | CONDENSER WATER PUMP |
| CU | CONDENSING UNIT |
| DB | DRY BULB |
| DEFL. | DEFLECTION |
| DEG. F | DEGREES FAHRENHEIT |
| DET. | DETAIL |
| DD | DESIGN DEVELOPMENT |
| DIA. | DIAMETER |
| DISC. | DISCONNECT SWITCH |
| DIM. | DIMENSION |
| EA | EXHAUST AIR |
| EDB | ENTERING DRY BULB |
| EF | EXHAUST FAN |
| ELEC. | ELECTRICAL |
| ELEV. | ELEVATION |
| EMCS. | ENERGY MGMT. CONTROL SYSTEM |
| E.S.P. | EXTERNAL STATIC PRESS. (IN. W.G.) |
| EWB | ENTERING WET BULB |
| EWT | ENTERING WATER TEMPERATURE |
| EXH. | EXHAUST |
| EXIST. | EXISTING |
| F/A | FREE AREA OPENING (SQ. FT.) |
| FCU | FAN COIL UNIT |
| FHP | FRACTIONAL HORSE POWER |
| FLR. | FLOOR |
| FPI | COIL FINS PER INCH. |
| FPM | FEET PER MINUTE |
| FPS | FEET PER SECOND |
| FT. | FOOT OR FEET |
| GFI | GROUND FAULT INTERRUPTER |
| GPM | GALLONS PER MINUTE |
| HD. | HEAD |
| HOA | HANDS/OFF/AUTO. MOTOR STARTER |
| HP | HORSE POWER |
| HPU | HEAT PUMP UNIT |
| HR. | HOUR(S) |
| HT. | HEIGHT |
| HTG. | HEATING |
| HTR. | HEATER |
| HVAC | HEAT,VENT AND AIR CONDITIONING |
| HWP | HOT WATER PUMP |
| HX | HEAT EXCHANGER |
| HZ. | FREQUENCY (HERTZ) |
| ID | INSIDE DIAMETER OR DIMENSION |
| IN. | INCHES |
| KW | KILOWATT |
| KWH | KILOWATT HOUR |
| LAT | LEAVING AIR TEMPERATURE |
| LWT | LEAVING WATER TEMPERATURE |
| MAX. | MAXIMUM |
| MCA | MINIMUM CURRENT AMPS. |
| MOCP | MAX. OVER CURRENT PROTECTION |
| MBH | 1000 BTU PER HOUR |
| MECH. | MECHANICAL |
| MFR. | MANUFACTURER |
| MIN. | MINIMUM |
| MVD | MANUAL VOLUME DAMPER |
| N/A | NOT APPLICABLE |
| NC | NOISE CRITERIA |
| NIC | NOT IN CONSTRUCTION |
| NK | NECK DIMENSION |
| NO. | NUMBER |
| OA | OUTSIDE AIR |
| OAR | OWNERS AUTHORIZED REPRESENTATIVE |
| OBD | OPPOSED BLADE DAMPER |
| OD | OUTSIDE DIAMETER |
| ORIG. | ORIGINAL |
| P.D. | PRESSURE DROP (FT) |
| PH. | PHASE |
| PMB | POWERED MIXING BOX |
| PLBG. | PLUMBING |
| PNL. | PANEL |
| PRESS. | PRESSURE |
| RA | RETURN AIR |
| RAG | RETURN AIR GRILLE |
| RD. | RADIUS |
| REF. | REFERENCE |
| RPM | REVOLUTIONS PER MINUTE |
| RTU | ROOF TOP UNIT |
| S/S | SINGLE SPEED MOTOR |
| S/S/S | START/STOP/STATUS |
| SA | SUPPLY AIR |
| SAG | SUPPLY AIR GRILLE |
| SDC | STAND ALONE DIGITAL CONTROLLER |
| SEER | SEASON ENERGY EFFICIENCY RATIO |
| SENS. | SENSIBLE |
| SP | STATIC PRESSURE |
| SQ. | SQUARE |
| STR. | MOTOR STARTER |
| TEMP. | TEMPERATURE |
| T.S.P. | TOTAL STATIC PRESSURE (IN. W.G.) |
| UH | UNIT HEATER |
| UNO | UNLESS NOTED OTHERWISE |
| V | VOLT |
| VAV | VARIABLE AIR VALVE |
| VEL. | VELOCITY |
| W | WATT |
| W/ | WITH |
| W/O | WITHOUT |
| W.G. | WATER GUAGE |
| WB | WET BULB |
| WP | WEATHERPROOF |
| WPD | WATER PRESSURE DROP |
| WPG | WEATHERPROOF GFI |
| XFMR. | TRANSFORMER |

# ELECTRICAL SYMBOLS

| | |
|---|---|
| A○3 | RECESSED OR SURFACE, TYPE 'A' DOWNLIGHT FIXTURE ON CIRCUIT #3. |
| A□3 | RECESSED OR SURFACE, TYPE 'A' LIGHTING TROFFER FIXTURE ON CIRCUIT #3. |
| | WALL MOUNTED OR BRACKET MOUNTED LIGHTING FIXTURE. |
| A●3 | RECESSED OR SURFACE, TYPE 'A' WALL WASHER FIXTURE ON CIRCUIT #3. |
| | HATCHED FIXTURE INDICATING A NIGHT LIGHT OR AN EMERGENCY LIGHTING FIXTURE. |
| | CEILING MOUNTED EXIT SIGN AND WALL MOUNTED EXIT SIGN. |
| | UNITARY EMERGENCY LIGHTING FIXTURE |
| J | JUNCTION BOX, SIZED BY E.C. PER NEC. |
| | GRID SYSTEM JUNCTION BOXES, SIZED BY E.C. PER NEC. |
| | DUPLEX RECEPTACLE, 20A, 125V, GROUNDED. |
| | DUPLEX RECEPTACLE, 20A, 125V, ISOLATED GROUND. |
| | DUPLEX RECEPTACLE, 20A, 125V, GROUND, HALF SWITCHED. |
| | SIMPLEX RECEPTACLE, 20A (U.N.O.), 125V, GROUNDED. |
| 30 | POWER RECEPTACLE, 2 POLE, 250V SINGLE PHASE. AMPS GREATER THAN 20A TO BE NOTED. |
| | QUADPLEX RECEPTACLE, 20A, 125V, GROUNDED. |
| 30 | 3 PHASE RECEPTACLE, AMPS GREATER THAN 20A TO BE NOTED. |
| | TELEPHONE OUTLET, DATA OUTLET, COMBINATION TELEPHONE/DATA OUTLET. |
| | TELEVISION OUTLET. |
| | CEILING MOUNTED SPEAKER, WALL MOUNTED SPEAKER. |
| M | MICROPHONE OUTLETS. |
| | FLOOR BOX WITH DUPLEX RECEPTACLE. |
| | FLOOR BOX WITH TELEPHONE OUTLET, FLOOR BOX WITH DATA. |
| | MULTI-USE FLOOR BOXES. |
| | MULTI-OUTLET STRIP. |
| | BUZZER, BELL. |
| | SINGLE FACE CLOCK, DOUBLE FACE CLOCK. |
| L | FIRE ALARM HORN, FIRE ALARM HORN AND STROBE ASSEMBLY, FIRE ALARM STROBE. |
| LF F | FIRE ALARM HORN AND STROBE ASSEMBLY WITH MANUAL PULL STATION, MANUAL PULL STATION. |
| S T | FIRE ALARM WATER FLOW SWITCH, TAMPER SWITCH. |
| P PD | FIRE ALARM CEILING MOUNTED SMOKE DETECTOR, DUCT MOUNTED SMOKE DETECTOR. |
| H | FIRE ALARM HEAT DETECTOR. |
| S | SINGLE POLE SWITCH. |
| S3 | THREE WAY SWITCH. |
| S4 | FOUR WAY SWITCH. |
| SD | DIMMER SWITCH. |
| SK | KEY OPERATED SWITCH. |
| SK3 | KEY OPERATED THREE WAY SWITCH. |
| SP | MOMENTARY CONTACT SWITCH. |
| | PUSH BUTTON SWITCH. |
| | START - STOP PUSH BUTTON SWITCH |
| | H.O.A. PUSH BUTTON SWITCH. |
| SM | SINGLE THROW THERMAL SWITCH. |
| | PUSH BUTTON START / STOP SWITCH. |
| | MAGNETIC MOTOR STARTER. |
| | FUSED SWITCH. |
| | DISCONNECT SWITCH. |
| F | FUSED DISCONNECT SWITCH. |
| | MOTOR. |
| | WIRING SYMBOLS: NEUTRAL, HOT, SWITCH, GROUND. |
| | CONDUIT CONCEALED IN OR BELOW FLOOR. |
| | PANELBOARD (250 VOLT OR BELOW). |
| | PANELBOARD (480 VOLT OR 600 VOLT). |
| | DRY TYPE TRANSFORMER. |
| G | GROUNDING BUS BAR |
| | TELEPHONE CABINET OR BACKBOARD |
| A G AG | ABOVE COUNTER, GFCI RECEPTACLE, ABOVE COUNTER GFCI RECEPTACLE. |

NOTE: NOT ALL SYMBOLS SHOWN ARE NECESSARILY USED.

# HVAC LEGEND

| SINGLE LINE | DESCRIPTION | DOUBLE LINE |
|---|---|---|
| | 90½ ELBOW DOWN | |
| | 90½ ELBOW UP | |
| | OFFSET TO CHANGE ELEVATION ( AT 30½ WHEN POSSIBLE ARROW SLOPES DN. ) | |
| | ROUND RADIUS ELBOW | |
| | 45½ ELBOW | |
| | 90½ STRAIGHT TEE | |
| | 90½ CONICAL TEE | |
| | 45½ BRANCH | |
| | 45½ CONICAL TEE | |
| | SIZE TRANSITION | |
| | SHAPE TRANSITION | |
| | ROUND FLEXIBLE DUCT | |
| | 90½ ELBOW DOWN W/ TURNING VANES (U.N.O.) | |
| | 90½ ELBOW UP W/ TURNING VANES (U.N.O.) | |
| | TEE WITH SPLITTER & TURNING VANES IN VERTICAL | |
| | OFFSET TO CHANGE ELEVATION (AT 30½ WHEN POSSIBLE ARROW SLOPES DN. ) | |
| | RECTANGULAR RADIUS ELBOW | |
| | RECTANGULAR ELBOW WITH TURNING VANES | |
| | SPLIT BRANCH TAKE-OFF WITH SQUARE ELBOW AND SPLITTER DAMPER. | |
| | SPLIT BRANCH TAKE-OFF WITH RADIUS ELBOW AND SPLITTER DAMPER. | |
| | BRANCH TAKE-OFF WITHOUT AIR BALANCING DAMPER. | |
| | BRANCH TAKE-OFF WITH AIR BALANCING DAMPER. (SCOOP DAMPER) | |
| | TEE WITH SPLITTER DAMPER | |
| | SPIN-IN TAP WITH DAMPER | |
| | SQUARE NECK CLG. DIFFUSER 4-WAY DIRECTIONAL THROW UNLESS INDICATED OTHERWISE. | |
| | SQUARE NECK CLG. DIFFUSER 4-WAY DIRECTIONAL THROW UNLESS INDICATED OTHERWISE. | |
| | SIDEWALL SUPPLY GRILLE OR REGISTER WITH O.B.D. | |
| | SUPPLY DUCT RISER | |
| | RETURN, EXHAUST OR OUTSIDE AIR DUCT RISER. | |
| | CEILING RETURN AIR GRILLE OR REGISTER | |
| | DOOR GRILLE | |
| | VOLUME DAMPER | |
| | FIRE DAMPER | |
| | MOTORIZED DAMPER | |
| | GRAVITY BACKDRAFT DAMPER | |
| S | AUTO SMOKE DAMPER | S |
| P | DUCT MOUNTED SMOKE DETECTOR | P |
| | SMOKE/FIRE DAMPERS (CLASS II MIN.) | |
| T | THERMOSTAT OR TEMPERATURE SENSOR | T |
| H / C | ROOM HUMIDISTAT / CARBON DIOXIDE SENSORS | H / C |

NOTE: NOT ALL SYMBOLS SHOWN ARE NECESSARILY USED.

ROUND (Ø) OR OVAL (⌀)

RECTANGULAR

MISCELLANEOUS

# PLUMBING SYMBOL LEGEND

| | |
|---|---|
| | SANITARY SEWER (SS) |
| | SANITARY VENT (V) |
| SD | STORM DRAIN (SD) |
| OD | STORM OVERFLOW DRAIN (OD) |
| GW | GREASE WASTE (GW) |
| AW | ACID WASTE (AW) |
| AV | ACID VENT (AV) |
| | DOMESTIC COLD WATER (CW) |
| | DOMESTIC HOT WATER (110°F HW) |
| 140° | DOMESTIC HOT WATER (140°F HW) |
| | DOMESTIC HOT WATER RETURN (RECIRC) |
| 140° | DOMESTIC HOT WATER RETURN (140°F RECIRC) |
| F | FIRE LINE (F) |
| G | NATURAL GAS (G) |
| A | COMPRESSED AIR (A) |
| $O_2$ | OXYGEN |
| V | VACUUM |
| $N_2$ | NITROGEN (N) |
| $N_2O$ | NITROUS OXIDE (NO) |
| | RISER DOWN (ELBOW) |
| | RISER UP (ELBOW) |
| | BRANCH-BOTTOM CONNECTION |
| | BRANCH-TOP CONNECTION |
| | TEE CONNECTION |
| | 90° ELBOW |
| | CAP ON END OF PIPE |
| | UNION |
| | FLOOR CLEANOUT |
| | CLEANOUT PLUG |
| | BALL VALVE |
| | PRESSURE REDUCING VALVE |
| | CHECK VALVE |
| | FLOW CONTROL VALVE |
| | GAS COCK |
| | TEMPERATURE-PRESSURE RELIEF VALVE |
| | THERMOMETER |
| | PRESSURE GAUGE WITH GAUGE COCK |
| | DIRECTION OF SLOPE |
| | DIRECTION OF FLOW |
| | OUTLET (SPECIFY TYPE) |
| AC | COMPRESSED AIR OUTLET |
| N.F.W.H. | NON-FREEZE WALL HYDRANT |
| H.B. | HOSE BIBB |
| | FLOOR SINK |
| | FLOOR DRAIN |
| H.D. | HUB DRAIN |
| R.D. | ROOF DRAIN |
| O.D. | OVERFLOW DRAIN |
| | EXISTING PIPING TO BE REMOVED |
| | NEW CONNECTION TO EXISTING |

NOTE: NOT ALL SYMBOLS SHOWN ARE NECESSARILY USED.

N

0 8' 16' 32'

1/16"=1'-0"


S. Toub & Associates, Inc.
Consulting Engineer Mechanical / Electrical
Firm Registration No. - F-1584
1550 Hi-Line Drive, Suite 1600 Dallas, Texas 76207
972/386-5629

The seal on this document was authorized by Richard L. Norris, P.E. 100089 on the date shown below.

STATE OF TEXAS Richard L. Norris 100089 LICENSED PROFESSIONAL ENGINEER

cn=Richard L Norris
P.E., o=S Toub &
Associates Inc, ou=
email=rnorris@toubandassociates.com, c=US
2021.11.11 14:44:34 -06'00'

FREESE NICHOLS

2220 San Jacinto Blvd., Suite 330
Denton, Texas 76205-7589
(940) 387-4600
Fax - (940) 387-4677


TOWN OF ADDISON, TEXAS

SURVEYOR 1.5 MG EST

M.E.P.

SYMBOLS & ABBREVIATIONS

| NO. | ISSUE | BY | DATE |
|---|---|---|---|

FAN JOB NO. ADD08459
DATE 01/18/11
DESIGNED GCH
DRAWN TRB
REVISED
CHECKED RLN
FILE NAME 4049-MEP-1.dwg

VERIFY SCALE Bar is one inch on original drawing. If not one inch on this sheet, adjust scale.
0 1"

SHEET MEP-1

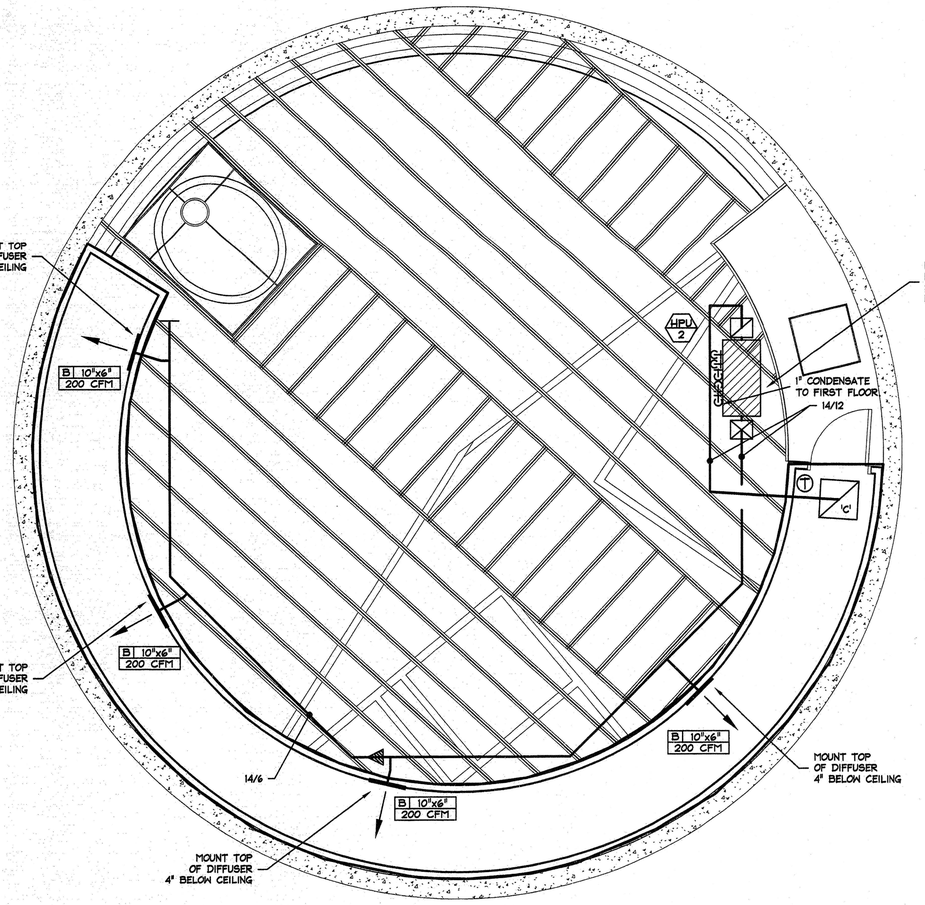


## 02 FLOOR PLAN – MEZZANINE MECHANICAL

SCALE: 1/4" = 1'-0"

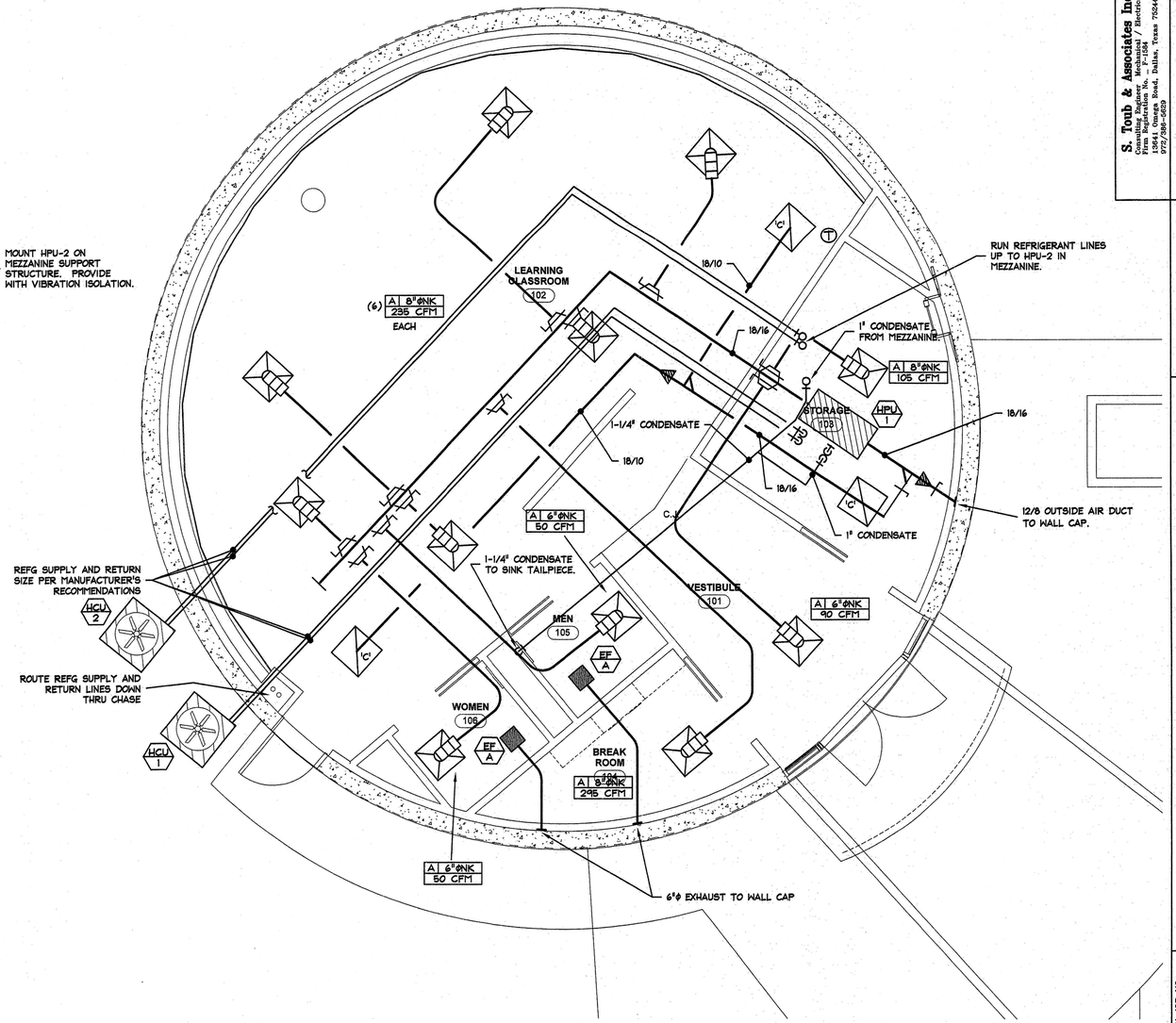


## 01 FLOOR PLAN – MECHANICAL

SCALE: 1/4" = 1'-0"

N

0 8' 16' 32'

1/16"=1'-0"

S. Toub & Associates Inc.
Consulting Mechanical Engineers
Firm Registration No. – F-1584
2584 E. Kiest Blvd.
Dallas, Texas 75216
972-376-4500

FREESE NICHOLS
2220 San Jacinto Blvd., Suite 330
Denton, Texas 76205-7599
Phone (940) 387-4600
Fax (940) 387-4677

The seal on this document was authorized by Richard L. Norris, P.E. 100089 on the date shown below.

STATE OF TEXAS
Richard L. Norris
100089
REGISTERED PROFESSIONAL ENGINEER

cn=Richard L. Norris P.E., o=S. Toub & Associates Inc., ou=mechanical, email=rlnorris@stoubandassociates.com, c=US
2011.01.18 11:45:23 -06'00'

TOWN OF ADDISON, TEXAS

SURVEYOR 1.5 MG EST

M.E.P.

FLOOR PLAN – MECHANICAL

| NO. | ISSUE | BY | DATE |
|---|---|---|---|
| | | | |

F&N JOB NO. AD008459
DATE 01/18/11
DESIGNED GCH
DRAWN TRB
REVISED
CHECKED RLN
FILE NAME 4049-M-1.dwg

VERIFY SCALE Bar is one inch on original drawing. If not one inch on this sheet, adjust scale.
0 1"

SHEET M-1

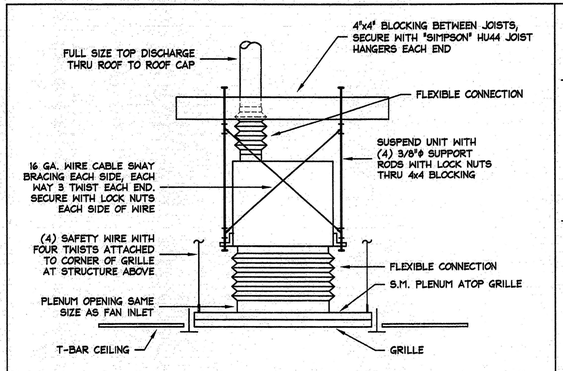


## 01 EXHAUST FAN – CEILING TYPE

SCALE: NTS

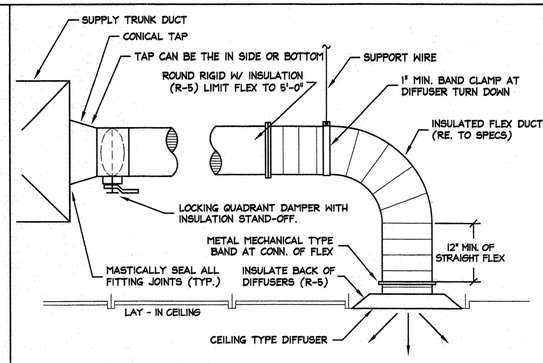


## 02 TYPICAL CEILING SUPPLY DIFFUSER

SCALE: NTS

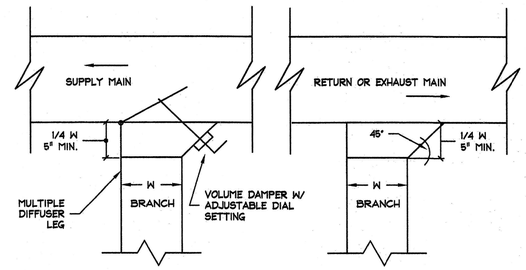


## 03 LOW PRESSURE BRANCH TAKE OFF

SCALE: NTS

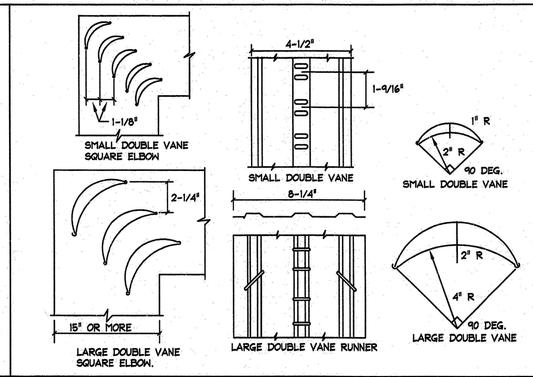


## 04 VANED DUCT ELBOW DETAIL

SCALE: NTS

## AIR DEVICE SCHEDULE

| MARK | DESCRIPTION | * CEILING TYPE | ** FACE DIMENSION | TYPE | VOLUME DAMPER | FINISH | MANUF. | MODEL NO. | REMARKS *** |
|---|---|---|---|---|---|---|---|---|---|
| A | LOUVER FACE | * | 24"x24" | SUPPLY | NO | PER ARCH. | TITUS | TMS | SQUARE STEEL CONCENTRIC LOUVER FACE CEILING DIFFUSER. W/ ROUND NECK INLET. |
| B | LOUVER FACE | SIDE WALL | SIZE AS INDICATED | SUPPLY | O.B.D. | PER ARCH. | TITUS | 300FL | DOUBLE DEFLECTION ALUMINUM REGISTER WITH ADJUSTABLE BLADES ON 3/4" BLADE SPACING WITH FRONT BLADES PARALLEL TO LONG DIMENSION. |
| C | LOUVER FACE | * | 24"x24" | RETURN | NO | PER ARCH. | TITUS | 350RL | 35° FIXED DEFLECTION STEEL GRILLE WITH BLADES ON 3/4" BLADE SPACING WITH BLADES PARALLEL TO LONG DIMENSION. |

NOTES:
1. MULTIPLE DEVICES HAVE THE SAME DESIGNATION. VERIFY EXACT NUMBER OF DEVICES WITH THE FLOOR PLANS.
2. * VERIFY FRAME STYLE REQUIREMENTS WITH ARCHITECTURAL REFLECTIVE CEILING PLANS.

## FAN SCHEDULE

| MARK | LOCATION | TYPE | CFM | S.P. ("W.G.) | MAX FAN RPM | TYPE DRIVE | MOTOR DATA | | | | | MANUFACTURER | MODEL NO. | REMARKS |
|---|---|---|---|---|---|---|---|---|---|---|---|---|---|---|
| | | | | | | | H.P. | RPM | VOLTS | PHASE | STARTER | | | |
| EF-A | ABOVE CLG. | CENTRIF. | 125 | 0.375 | 1100 | DIRECT | 98W | 1750 | 120 | 1 | F.H.P. | COOK | GC-144 | 7,8,9 |

MULTIPLE UNITS HAVE THE SAME DESIGNATION. VERIFY EXACT NUMBER OF UNITS WITH THE FLOOR PLANS.
NOTES:
(1. MINIMUM LEAKAGE GRAVITY BACKDRAFT DAMPER, (2. AUTOMATIC DAMPER WITH ACTUATOR, (3. 2-SPEED MOTOR, (4. BIRDSCREEN (5. MANUFACTURER'S ROOF CURB, (6. INLET SAFETY GUARD, (7. PREMIUM EFFICIENCY ELECTRIC MOTOR, (8. MANUFACTURER'S DISCONNECT SWITCH, (9. SPEED CONTROLLER, (10. THROW AWAY FILTERS, (11. 24" VENTED ROOF CURB, (12. EXPLOSION PROOF MOTOR AND DRIVE WITH NON SPARKING WHEEL, (13. SWITCH WITH DOOR LATCH CONTACTS.

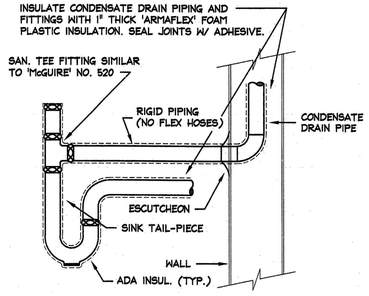


SINK TAIL-PIECE

## 05 CONDENSATE TERMINATION

SCALE: NTS

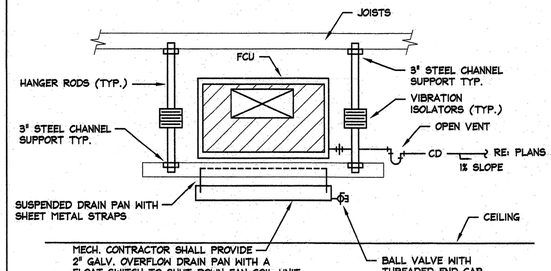


## 06 FCU SUPPORT

SCALE: NTS

## HEAT PUMP (DX) – INDOOR SECTION SCHEDULE

| MARK | SUPPLY CFM | O.A. CFM | FAN E.S.P. (IN. W.G.) | FAN HP | ENT. AIR (F) | | COOLING CAPACITY (MBH) | | VOLTS/ PHASE | AUXILIARY HEAT (KW) | MCA | MOCP | NOMINAL TONS | MANUFACTURER | MODEL NO. | REMARKS |
|---|---|---|---|---|---|---|---|---|---|---|---|---|---|---|---|---|
| | | | | | DB | WB | SENSIBLE | TOTAL | | | | | | | | |
| HPU-1 | 2000 | 300 | 0.375 | 1 | 79.5 | 66.5 | 36.0 | 50.6 | 208/3 | 18.8 | 44/27 | 50/40 | 5 | LENNOX | CBX32MV-060 | -- |
| HPU-2 | 800 | --- | 0.375 | 1 | 75.0 | 65.0 | 12.5 | 20.0 | 208/1 | 3.0 | 23 | 25 | 2 | LENNOX | CBX32MV-024 | -- |

NOTES:
1. MULTIPLE UNITS HAVE THE SAME DESIGNATION. VERIFY EXACT NUMBER OF UNITS WITH THE FLOOR PLANS.
2. EXTERNAL STATIC PRESSURE (E.S.P.) IS DUCTWORK AND GRILLES ONLY. BHP SHOULD INCLUDE TWICE INITIAL FILTER LOSSES.
3. PROVIDE RELAYS, XFMRS, CONTROLS, ETC. FOR A SINGLE POINT ELECTRICAL CONNECTION.
4. PROVIDE MANUFACTURERS 7-DAY PROGRAMMABLE T-STAT WITH SUBBASE.
5. PROVIDE ANTI SHORT CYCLE TIMER, HIGH AND LOW PRESSURE SWITCH.
6. PROVIDE VIBRATION ISOLATION PACKAGE.

## HEAT PUMP (DX) – OUTDOOR SECTION SCHEDULE

| MARK | SERVES | TOTAL COOLING CAPACITY AT 105F AMB. (MBH) | HEATING CAPACITY AT 17F AMB. (MBH) | MINIMUM SUCTION TEMP. (F) | ELECTRICAL DATA | | | | MIN. EER | NOMINAL TONS | MANUFACTURER | MODEL NO. | REMARKS | OPERATING WEIGHT (>200 LBS.) |
|---|---|---|---|---|---|---|---|---|---|---|---|---|---|---|
| | | | | | VOLTS | PHASE | MCA | MOCP | | | | | | |
| HCU-1 | HPU-1 | 50.6 | 52.5 | 42 | 208 | 3 | 23.9 | 40 | 12 | 5 | LENNOX | SPB060H4 | -- | 331 |
| HCU-2 | HPU-2 | 20.0 | 12.9 | 42 | 208 | 1 | 15.7 | 25 | 12 | 2 | LENNOX | XP19-024 | -- | 304 |
| | | | | | | | | | | | | | | |
| | | | | | | | | | | | | | | |

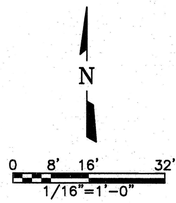


S. Taub & Associates Inc.
Consulting Mechanical / Electrical Engineers
Firm Registration No. – F-1584
13164 Omega Road, Dallas, Texas 75244
(972) 490-4949

The seal on this document was authorized by Richard L. Norris, P.E. 100089 on the date shown below.

cn=Richard L Norris
P.E. ou=S. Taub & Associates Inc.
email=rnorris@staub
andassociates.com,
c=US
2011.01.19 11:43:43
-06'00'

STATE OF TEXAS
Richard L. Norris
100089
LICENSED
PROFESSIONAL
ENGINEER

FREESE NICHOLS
2220 San Jacinto Blvd., Suite 330
Denton, Texas 76205-7599
Phone – (940) 387-4600
Fax – (940) 387-4677

TOWN OF ADDISON, TEXAS
SURVEYOR 1.5 MG EST
M.E.P.
MECHANICAL SCHEDULES

| NO. | ISSUE | BY | DATE |
|---|---|---|---|

F&N JOB NO. ADD08459
DATE 01/18/11
DESIGNED GCH
DRAWN TRB
REVISED
CHECKED RLN
FILE NAME 4049-M-2.dwg

VERIFY SCALE Bar is one inch on original drawing. If not one inch on this sheet, adjust scale.
0 1"

SHEET M-2

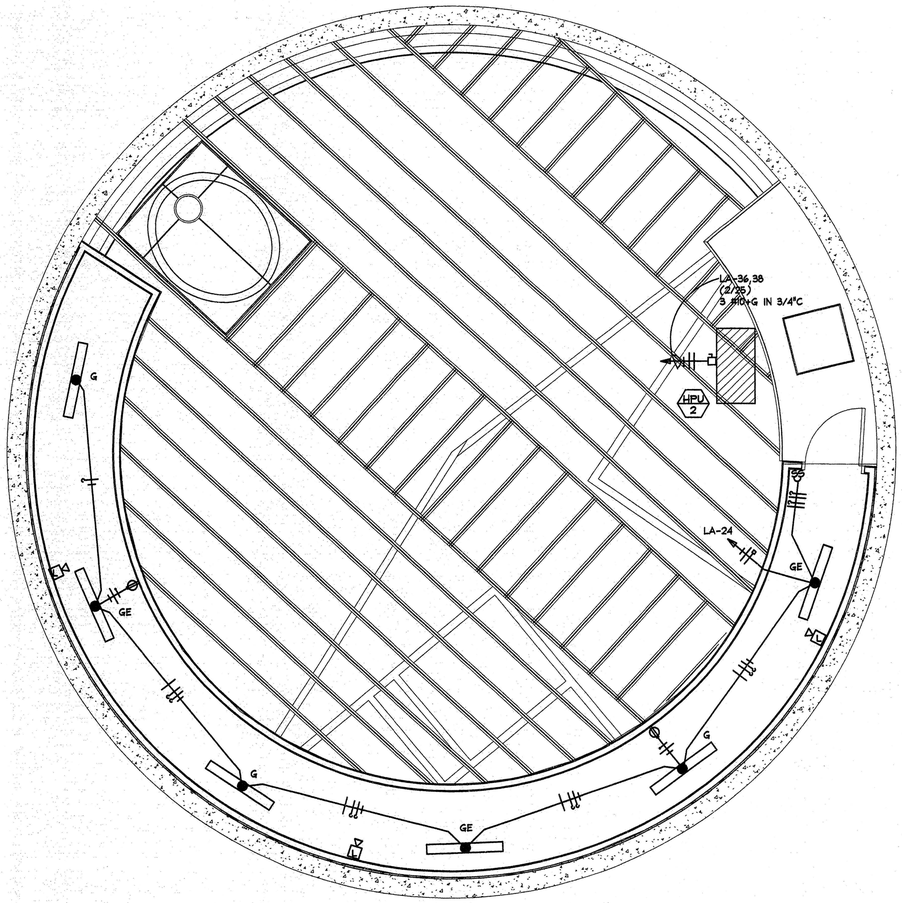


## 02 FLOOR PLAN – MEZZANINE ELECTRICAL

SCALE: 1/4" = 1'-0"

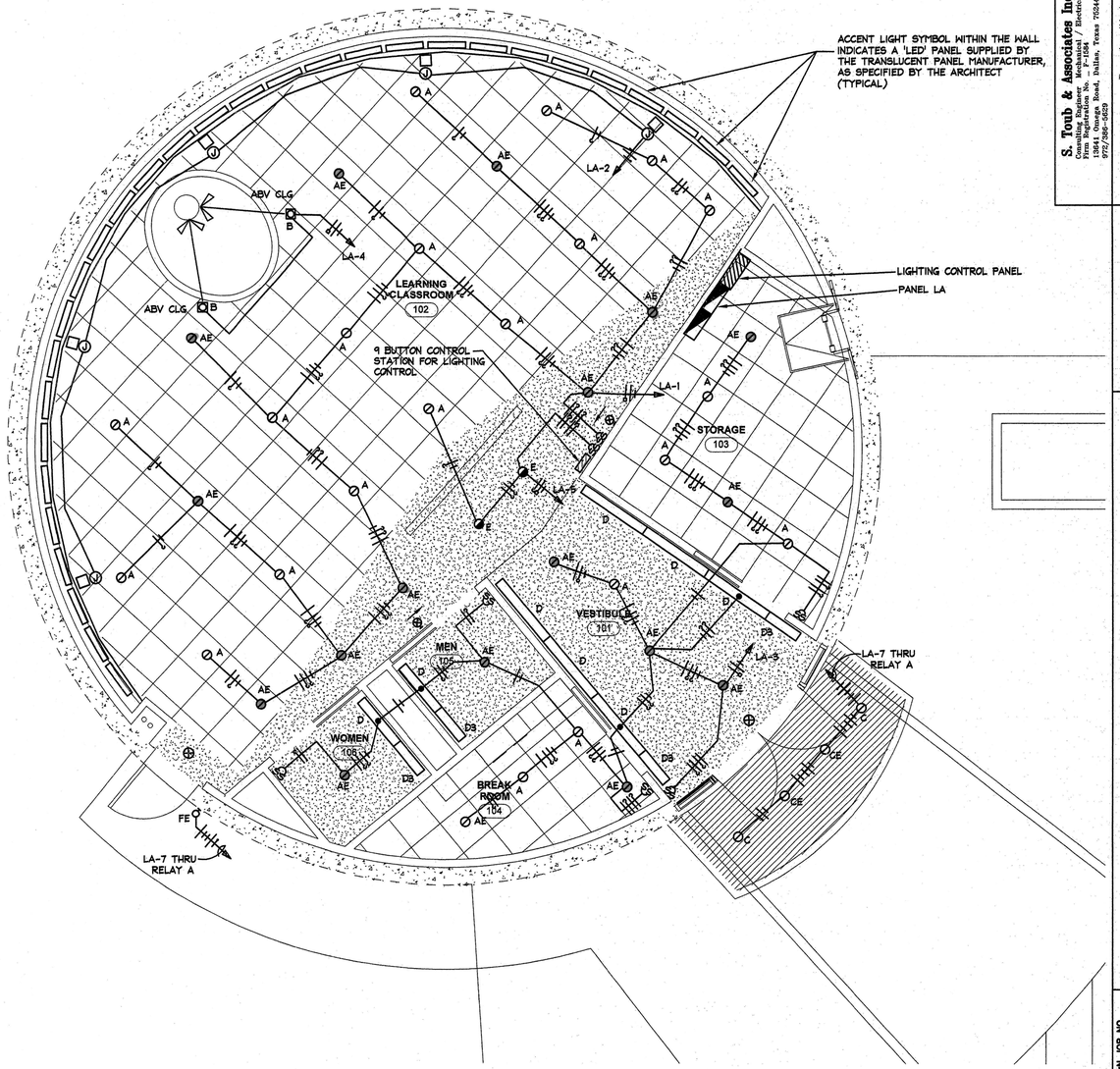


## 01 FLOOR PLAN – LIGHTING

SCALE: 1/4" = 1'-0"

NOTES

1 ALL LIGHT FIXTURES SHALL BE TYPE "A" UNLESS NOTED OTHERWISE

2 ALL CONDUITS SHALL CONTAIN A SWITCH LEG, NEUTRAL, AND GROUND UNLESS INDICATED OTHERWISE

3 ALL EXIT SIGNS SHALL BE CONNECTED TO CIRCUIT LA-20 UNLESS INDICATED OTHERWISE

N

0 8' 16' 32'

1/16"=1'-0"

S. Taub & Associates Inc.
Consulting Engineer Mechanical / Electrical
Firm Registration No. – F-1264
1512 Main Street, Suite 200, Dallas, Texas 75201
972/386-6650

FREESE NICHOLS
2220 San Jacinto Blvd., Suite 330
Denton, Texas 76205-7588
(940) 387-8557
Fax - (940) 387-4677

The seal on this document was authorized by Richard L. Norris, P.E. 100089 on the date shown below.

STATE OF TEXAS Richard L. Norris 100089 REGISTERED PROFESSIONAL ENGINEER

cn=Richard L. Norris P.E., o=S Taub & Associates, ou=Mechanical, email=rnorris@staubandassociates.com, c=US
2011.01.18 11:46:05 -06'00'

TOWN OF ADDISON, TEXAS

SURVEYOR 1.5 MG EST

M.E.P.

FLOOR PLAN – LIGHTING

| NO. | ISSUE | BY | DATE |
|---|---|---|---|
| | | | |

F&N JOB NO. ADD08459
DATE 01/18/11
DESIGNED GCH
DRAWN TRB
REVISED
CHECKED RLN
FILE NAME 4049-E-1.dwg

VERIFY SCALE Bar is one inch on original drawing. If not one inch on this sheet, adjust scale.
0 1"

SHEET EP-1

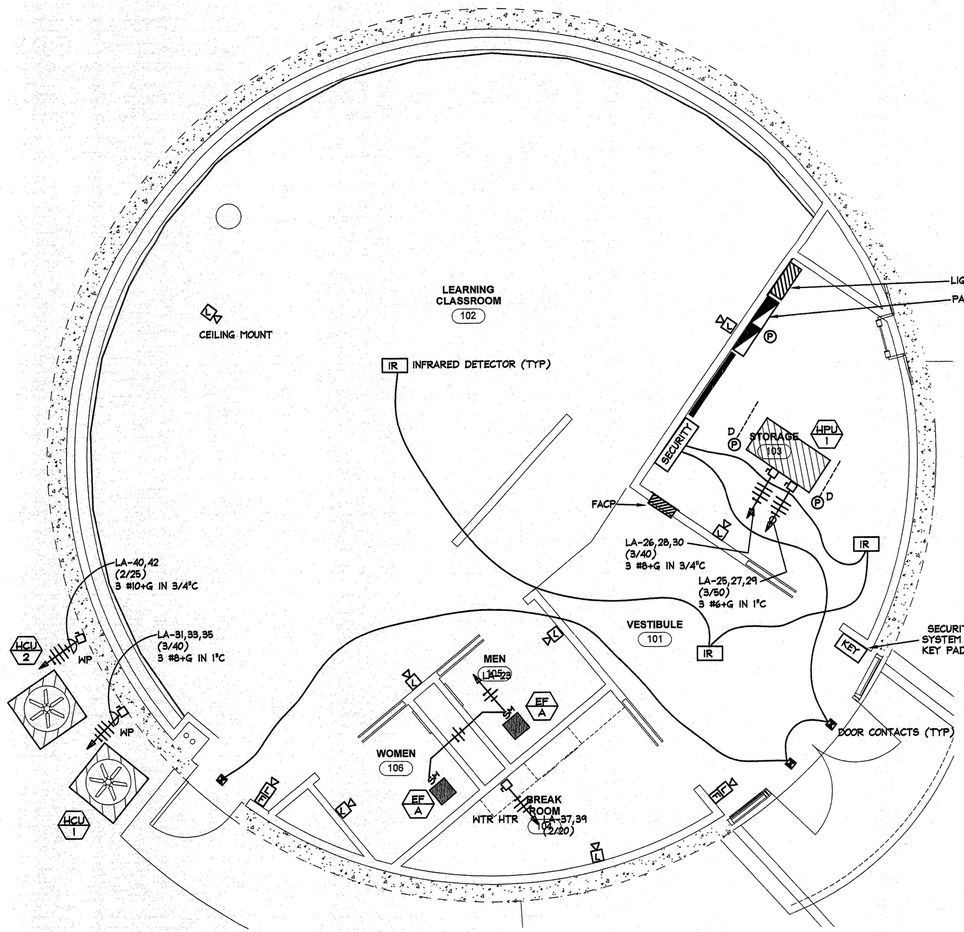


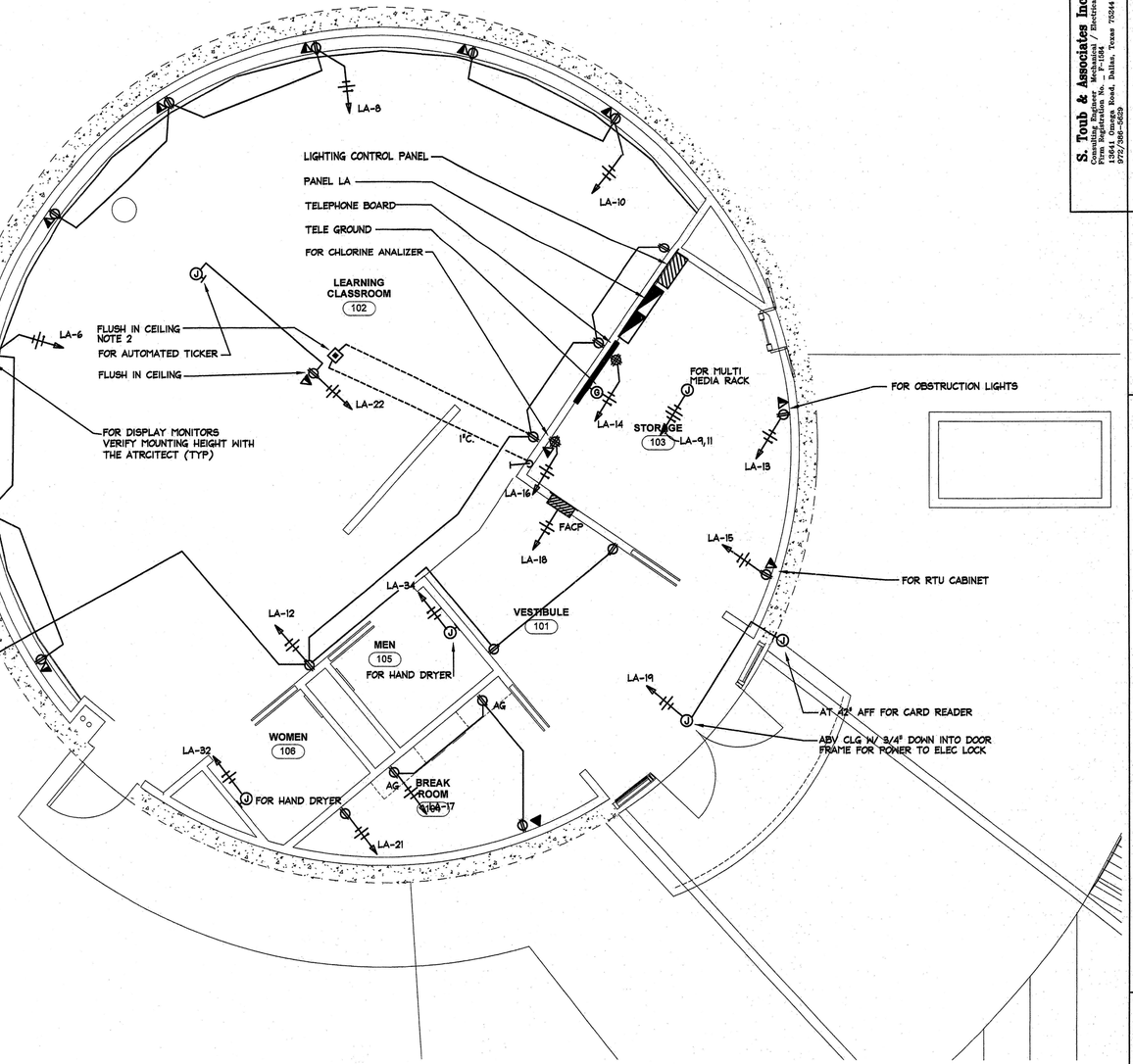


## 02 FLOOR PLAN – MECHANICAL POWER

SCALE: 1/4" = 1'-0"

## 01 FLOOR PLAN – POWER

SCALE: 1/4" = 1'-0"

NOTES

1 ALL CONDUITS SHALL CONTAIN A HOT LEG, NEUTRAL AND GROUND UNLESS INDICATED OTHERWISE

2 FLUSH FLOOR BOX FOR POWER AND DATA SHALL BE WIREMOLD
BOX = 2 GANG, #880MP (2)
COVER = BRASS, 2 GANG, #827B
POWER INSERT = BRASS #828R
DATA INSERT = BRASS #828SPTC
(1) DUPLEX RECEPTACLE/IVORY
(1) TELE/DATA JACK

N

0 8' 16' 32'
1/16"=1'-0"

S. Toub & Associates Inc.
Consulting Engineer Mechanical / Electrical
Firm Registration No. F-1584
13641 Omega Road, Dallas, Texas 75244
972/386-5629

The seal on this document was authorized by Richard L. Norris, P.E. 10089 on the date shown below.

STATE OF TEXAS
Richard L. Norris
100089
REGISTERED PROFESSIONAL ENGINEER

FREESE AND NICHOLS
2220 San Jacinto Blvd., Suite 330
Denton, Texas 76205-7589
Phone – (940) 387-4600
Fax – (940) 387-4677

TOWN OF ADDISON, TEXAS
SURVEYOR 1.5 MG EST

M.E.P.
FLOOR PLAN – POWER

| NO. | ISSUE | BY | DATE |
|---|---|---|---|
| | | | |

F&N JOB NO. ADD08459
DATE 01/18/11
DESIGNED GCH
DRAWN TRB
REVISED
CHECKED RLN
FILE NAME 4049-E-2.dwg

VERIFY SCALE 0 1
Bar is one inch on original drawing. If not one inch on this sheet, adjust scale.

SHEET EP-2

## LIGHT FIXTURE SCHEDULE

| MARK | DESCRIPTION | LENS / LAMPS | REMARKS |
|---|---|---|---|
| A | 6" APERTURE ROUND VERTICAL RECESSED FLUORESCENT DOWNLIGHT WITH CLEAR SEMI-SPECULAR REFLECTOR AND ELECTRONIC BALLAST. 120 VOLT<br>LITHONIA #LP6FN-32TRT-609AZ-MVOLT | (1)-32W CFL | TYPE 'AE' IS THE SAME AS TYPE 'A' EXCEPT WITH BATTERY PACK TO DRIVE ONE LAMP FOR 90 MIN.<br>LITHONIA #EL OPTION |
| B | FLOOD LIGHT MOUNTED ABOVE CEILING ON A BOX SUSPENDED FROM STRUCTURE ABOVE. 4x4 DISTRIBUTION - 120 VOLT<br>LITHONIA #TFM100M-RG-120-TFMTS | CLEAR GLASS<br>(1)-100 W MH CLEAR | |
| C | 6" DOWNLIGHT, SHALLOW HOUSING, HORZ LAMP WITH DAMP LOCATION LABEL - 120 VOLT - 8" MAX DEPTH<br>LITHONIA #AF-132-6AR-MVOLT-DL | (1)-32W CFL | TYPE 'CE' IS THE SAME AS TYPE 'C' EXCEPT WITH BATTERY PACK TO DRIVE ONE LAMP FOR 90 MIN.<br>LITHONIA #EL OPTION |
| D | WALL THROUGH PERIMETER WALL WASH LIGHTING SYSTEM OF CUSTOM LENGTHS. NATURAL ALZAK BAFFLE, ELECTRONIC BALLAST - 120 V.<br>MARK ARCHITECTURAL LIGHTING PPL-XX-SL-0-2T8S-E8PR-120 | NATURAL ALZAK REFLECTOR<br>(2)-32W T8 | TYPE 'D3' IS THE SAME AS TYPE 'D' EXCEPT 3 FT LONG. |
| E | RECESSED FLUORESCENT LENSED WALL WASHER, WIDE DISTRIBUTION, 120 VOLT<br>GOTHAM #DLWF-132TRT-8-AR-120 | RIBBED GLASS LENS<br>(1)-32W CFL TRIPLE TUBE | |
| F | WALL MOUNTED SECURITY LIGHT W/ ELECTRONIC BALLAST. 120 VOLT<br>ECLIPSE #KVA-WS-DTT-120-WH | CLEAR GLASS<br>(2)-26W CFL | |
| G | SURFACE MOUNTED FLUORESCENT STRIP LIGHT W/ ELECTRONIC BALLAST. 120 VOLT<br>LITHONIA # C132-120 | (1)-32W T8 | TYPE 'GE' IS THE SAME AS TYPE 'G' EXCEPT WITH BATTERY PACK TO DRIVE ONE LAMP FOR 90 MIN.<br>LITHONIA #EL OPTION |
| X | EXIT LIGHT - UNIVERSAL MOUNT, UNIVERSAL ARROWS, STENCLED FACE, RED LETTERS, LED LAMPS, 120 VOLT, WHITE PLACTIC FINISH<br>LITHONIA #LQM-S-W-1-R-120-ELN | RED LENS<br>LED LAMP PANEL | |

## PANEL 'LA'

| DESCRIPTION | POLES | TRIP | CIRCUIT | LIGHTING | POWER | POWER | LIGHTING | CIRCUIT | TRIP | POLES | DESCRIPTION |
|---|---|---|---|---|---|---|---|---|---|---|---|
| Lights | 1P | 20 | 1 | 600 | | | 670 | 2 | 20 | 1P | Lighted Wall |
| Lights | 1P | 20 | 3 | 800 | | | 500 | 4 | 20 | 1P | Spot Lights |
| Spot Lights | 1P | 20 | 5 | 160 | | 540 | | 6 | 20 | 1P | 3 Recepts |
| Outdoor Lights | 1P | 20 | 7 | 750 | | 540 | | 8 | 20 | 1P | 3 Recepts |
| Multi Media Rack | 1P | 20 | 9 | | 1000 | 360 | | 10 | 20 | 1P | 2 Recepts |
| Multi Media Rack | 1P | 20 | 11 | | 1000 | 1200 | | 12 | 20 | 1P | 6 Recepts |
| Obstruction Lights | 1P | 20 | 13 | 1500 | | 500 | | 14 | 20 | 1P | Tele Board |
| RTU Cab | 1P | 20 | 15 | | 500 | 500 | | 16 | 20 | 1P | Chlorine Recepts |
| Kitchen Recepts | 1P | 20 | 17 | | 1200 | 500 | | 18 | 20 | 1P | F.A.C.P. |
| Door Locks | 1P | 20 | 19 | | 100 | | 100 | 20 | 20 | 1P | Exit Lights |
| Refrigerator | 1P | 20 | 21 | | 750 | 250 | | 22 | 20 | 1P | Automated Ticker |
| Toilet Ex Fans | 1P | 20 | 23 | | 300 | 360 | 390 | 24 | 20 | 1P | Mezzanine Lighting & Receptacles |
| Heat Pump - Indoor Unit Ckt 1 | 3P | 50 | 25 | | 4000 | 2700 | | 26 | 40 | 3P | Heat Pump Indoor Unit Ckt 2 |
| | | | 27 | | 4000 | 2700 | | 28 | | | |
| | | | 29 | | 4000 | 2700 | | 30 | | | |
| Heat Pump - Outdoor Unit | 3P | 40 | 31 | | 2500 | 1000 | | 32 | 20 | 1P | HAND DRYER |
| | | | 33 | | 2500 | 1000 | | 34 | 20 | 1P | HAND DRYER |
| | | | 35 | | 2500 | 1500 | | 36 | | 2P | Heat Pump Indoor HPU-2 |
| Water Heater | 2P | 20 | 37 | | 1000 | 1500 | | 38 | 25 | | |
| | | | 39 | | 1000 | 1632 | | 40 | | 2P | Heat Pump Outdoor HCU-2 |
| | 1P | 20 | 41 | | | 1632 | | 42 | 25 | | |
| | | | | | | | | | | | |
| Pedistal Ladder Lighting | 1P | 20 | 43 | 1000 | | | 650 | 44 | | 2P | Bowl Lighting |
| Pedistal Emergency Ltg. | 1P | 20 | 45 | 200 | | | 650 | 46 | 20 | | |
| Demonstration Turbo | 1P | 20 | 47 | | 800 | 450 | | 48 | 20 | 1P | Valve Vault Fan |
| Pedistal Base Ltg. | 1P | 20 | 49 | 1000 | | | 1400 | 50 | 20 | 1P | Turbine Lighting |
| Valve Vault Ltg. | 1P | 20 | 51 | 240 | | | | 52 | 20 | 1P | Spare |
| Valve Vault Recepts. (2) | 1P | 20 | 53 | | 360 | 180 | | 54 | 20 | 1P | Gazebo Receptacle. (1) |
| East Gate | 1P | 20 | 55 | | 600 | 800 | | 56 | 20 | 1P | Tank Mixer |
| South Gate | 1P | 20 | 57 | | 600 | 300 | | 58 | 20 | 1P | Irrigation Controller |
| | 1P | 20 | 59 | | | 180 | | 60 | 20 | 1P | Receptacle On Bowl |
| | 1P | 20 | 61 | | | | | 62 | 20 | 1P | |
| | 1P | 20 | 63 | | | | | 64 | 20 | 1P | |
| | 1P | 20 | 65 | | | | | 66 | 20 | 1P | |
| | 1P | 20 | 67 | | | | | 68 | 20 | 1P | |
| | 1P | 20 | 69 | | | | | 70 | 20 | 1P | |
| | 1P | 20 | 71 | | | | | 72 | 20 | 1P | |
| | 1P | 20 | 73 | | | | | 74 | 20 | 1P | |
| | 1P | 20 | 75 | | | | | 76 | 20 | 1P | |
| | 1P | 20 | 77 | | | | | 78 | 20 | 1P | |
| | 1P | 20 | 79 | | | | | 80 | | 3P | |
| | 1P | 20 | 81 | | | | | 82 | | | WIND TURBINE ELEC PANEL |
| | 1P | 20 | 83 | | | | | 84 | 400 | | |
| GROUND BUSS | | | | | | | | | | | |

| | | |
|---|---|---|
| CONNECTED LIGHTING | 10610 X 1.25 | 13263 |
| CONNECTED POWER | | 51734 |
| TOTAL DESIGN LOAD | | 64997 |
| TOTAL CONNECTED AMPS | | 180.63 |

| | |
|---|---|
| DESIGNATION | PANEL 'LA' |
| MOUNTING | SURFACE |
| VOLTAGE-PHASE-WIRE | 120/208 3 PH 4 WIRE |
| MAINS TYPE | MCB |
| MAINS AMPS | 400 |

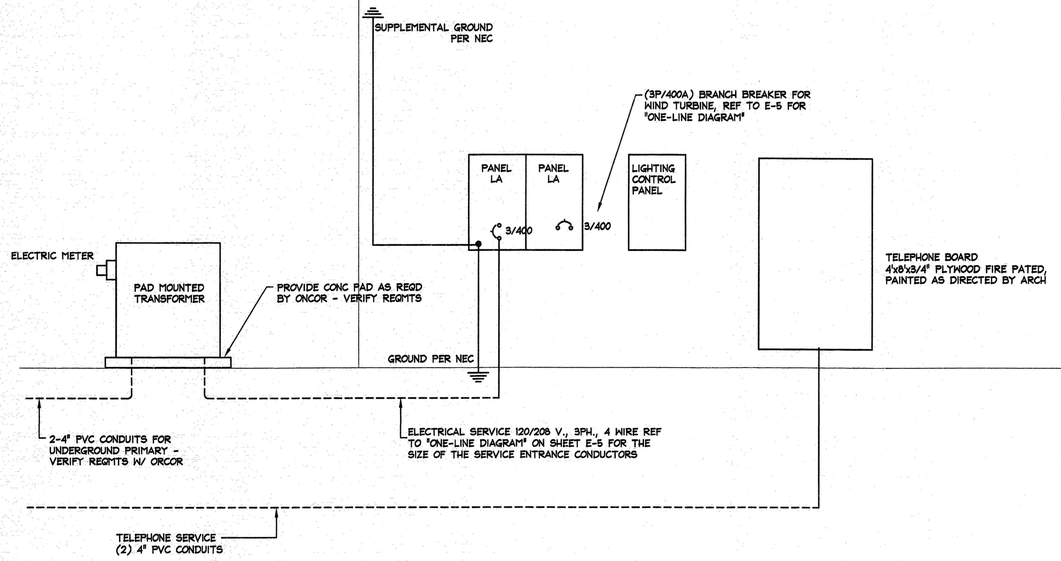


01 ELECTRICAL RISER DIAGRAM

SCALE: NONE

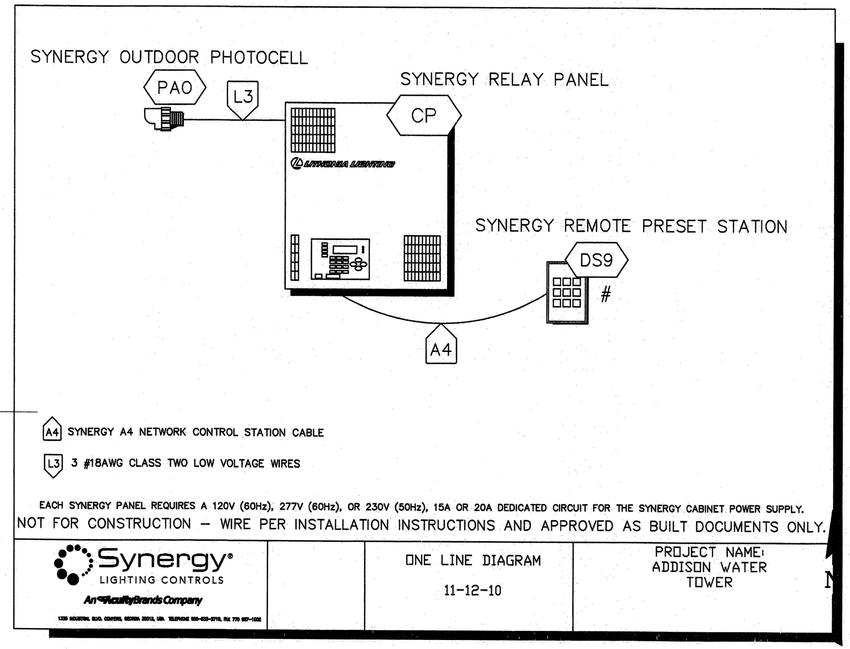


02 LIGHTING CONTROL PACKAGE

SCALE: NONE

0 8' 16' 32'
1/16"=1'-0"


S. Taub & Associates Inc.
Consulting Engineers / Electrical
Firm Registration No. F-1584
13841 Omega Road, Dallas, Texas 75244
972/980-0020


The seal on this document was authorized by Richard L. Norris, P.E. 100089 on the date shown below.

cn=Richard L. Norris P.E.,o=S. Taub & Associates Inc.,ou=Electrical Engineering,email=rnorris@staubassociates.com,c=US
2011.01.18 11:42:56 -06'00'

STATE OF TEXAS Richard L. Norris 100089 LICENSED PROFESSIONAL ENGINEER


FREESE NICHOLS
2220 San Jacinto Blvd., Suite 330
Denton, Texas 76205-7589
Phone - (940) 387-4600
Fax - (940) 387-4677


TOWN OF ADDISON, TEXAS

SURVEYOR 1.5 MG EST

M.E.P.

ELECTRICAL RISER DIAGRAM

| NO. | ISSUE | BY | DATE |
|---|---|---|---|

F&N JOB NO. ADD08459
DATE 01/18/11
DESIGNED GCH
DRAWN TRB
REVISED
CHECKED RLN
FILE NAME 4049-E-3.dwg

VERIFY SCALE Bar is one inch on original drawing. If not one inch on this sheet, adjust scale.

SHEET EP-3

# ELECTRIC WATER HEATER SCHEDULE

| DESIG. | MANUFACTURER | MODEL NUMBER | STORAGE GALLONS | RECOVERY RATE G.P.H. | TEMP. RISE | LEAVING WATER TEMP. | KW | VOLTAGE | PHASE | REMARKS |
|---|---|---|---|---|---|---|---|---|---|---|
| EWH-A | A.O. SMITH | DEL-5 | 5 | 14 | 60°F | 120°F | 2.0 | 208 | 1ϕ | SEE NOTES |

NOTES:
1. INSTALL WATER HEATER PER MANUFACTURER'S INSTRUCTIONS. INSTALL EXPANSION IF REQUIRED BY GOVERNING JURISDICTION.
2. CONTRACTOR SHALL PROVIDE BALL VALVES AND DIELECTRIC UNIONS AT WATER HEATER CONNECTIONS.
3. CONTRACTOR SHALL PROVIDE T&P RELIEF VALVE, DRAIN VALVE AND EMERGENCY OVERFLOW DRAIN PAN FOR WATER HEATER. T&P AND OVERFLOW DRAINS SHALL DISCHARGE OUTSIDE OR INTO NEAREST OPEN SIGHT DRAIN.

# PLUMBING FIXTURE SCHEDULE

| DESIG. | DESCRIPTION | MANUFACTURER & MODEL NUMBER | SAN. SWR SIZE | VENT SIZE | COLD WTR SIZE | HOT WTR SIZE | DESCRIPTION / REMARKS |
|---|---|---|---|---|---|---|---|
| WC-A | WALL MOUNTED DUAL FLUSH WATER CLOSET W/ FLUSH VALVE (ADA) | TOTO AQUIA #CT418FG TANK #ST182M PUSH PLATE #YT800#WH | 4" | 2" | 1" | - | WALL MOUNTED TO IN-WALL TANK SYSTEM, LOW CONSUMPTION DUAL-MAX FLUSHING SYSTEM SHALL BE 1.6 GPF & 0.8 GPF, ELONGATED FRONT BOWL AND WALL MOUNTED PUSH-BUTTON TYPE TRIP LEVER MOUNTED AT ADA HEIGHT WITH TOTO SS204#01 SOLID PLASTIC OPEN FRONT SEAT WITH SOFTCLOSE COVER. |
| L-A | WALL LAVATORY W/ TOUCHLESS DECK MOUNT FAUCET (ADA) | KOHLER KINGSTON #2005 KOHLER #K-13467-CP | 2" | 2" | 1/2" | 1/2" | VITREOUS CHINA, FAUCET LEDGE, FRONT OVERFLOW, UNDERCOUNTER MOUNT LAVATORY WITH FAUCET. FURNISH COMPLETE WITH CHROME PLATED 1 1/2 INCH P-TRAP, KEYLESS ANGLE STOPS, GRID STRAINER AND FLEXIBLE METAL SUPPLIES. FAUCET SHALL BE CAST BRASS, POLISHED CHROME PLATED FINISH, ABOVE COUNTER BATTERY ϕ VALVE, VANDAL RESISTANT, 0.5 GPM. |
| FD-A | FLOOR DRAIN (RESTROOMS AND EXPOSED AREAS) | JOSAM #30000-A-50-VP | - | 2" | 1/2" | - | CAST IRON FLOOR DRAIN, TWO PIECE BODY WITH DOUBLE DRAINAGE FLANGE, INVERTIBLE NON-PUNCTURING FLASHING COLLAR, WEEPHOLES, BOTTOM OUTLET AND ADJUSTABLE SATIN NIKALOY STRAINER, 1/2" TRAP PRIMER CONNECTION AND SECURED GRATE WITH VANDAL-PROOF SCREWS. VERIFY ROUND OR SQUARE TOP STRAINER WITH ARCHITECT. |
| S-A | DOUBLE COMPARTMENT STAINLESS STEEL SINK (ADA) | ELKAY LRAD-3319 MOEN #8242 | 2" | 2" | 1/2" | 1/2" | DOUBLE COMPARTMENT, 20 GUAGE, TYPE 304 NICKEL BEARING STAINLESS STEEL, SELF RIMMING SINK WITH (4) FAUCET HOLES (33"Lx19"Hx6-1/2"D). UNDERSIDE OF SINK IS FULLY UNDERCOATED. FURNISH COMPLETE WITH CHROME PLATED 1 1/2 INCH P-TRAP AND ANGLE STOPS WITH FLEXIBLE METAL SUPPLIES. FAUCET SHALL BE HEAVY DUTY CAST BRASS, POLISHED CHROME PLATED FINISH, TWO LEVER HANDLES, CERAMIC CARTRIDGE, 12" SWIVEL GOOSENECK SPOUT, 2.0 LAMINAR FLOW CONTROL AERATOR, LK-35 STRAINER & SPRAYER. |

## PLUMBING FIXTURE SCHEDULE NOTES:

1. CONTRACTOR SHALL REFER TO ARCHITECTURAL DRAWINGS FOR MOUNTING HEIGHTS AND LOCATIONS OF ALL PLUMBING FIXTURES INCLUDING HANDICAPPED (ADA) FIXTURES. CONTRACTOR SHALL COORDINATE ADA REQUIREMENTS WITH ARCHITECT PRIOR TO INSTALLATION OF PLUMBING FIXTURES.
2. FLUSH TANK FOR THE HANDICAPPED PLUMBING FIXTURES SHALL BE INSTALLED WHERE THE HANDLE FACES INTO THE OPEN AREA WITHIN THE STALL. (TOWARDS THE CENTER OF STALL)
3. CONTRACTOR SHALL PROVIDE FLEXIBLE MOLDED INSULATION SIMILAR TO TRUEBRO 'LAV GUARD' ON P-TRAPS, WATER SUPPLIES AND VALVES SERVING ADA PLUMBING FIXTURES. CONTRACTOR SHALL PROVIDE OFFSET P-TRAPS ON ADA FIXTURES.
4. CONTRACTOR SHALL INSTALL ALL PLUMBING FIXTURES SHOWN ON THE ARCHITECTURAL, KITCHEN, PLUMBING AND OWNER FURNISHED DRAWINGS.
5. CONTRACTOR SHALL FURNISH AND INSTALL ON EACH PLUMBING FIXTURE CHROME PLATED BRASS P-TRAP, NIPPLES WITH ESCUTCHEON, CHROME PLATED BRASS ANGLE SUPPLIES WITH ALL METAL CONSTRUCTION CHROME PLATED FLEXIBLE BRASS RISERS WITH NIPPLES AND CHROME PLATED BRASS ESCUTCHEONS WITH CAST SET SCREW.
6. CONTRACTOR SHALL PROVIDE ALL NECESSARY FITTINGS, PIPING, SUPPORTS, ETC. TO INSTALL EACH PLUMBING FIXTURE PER MANUFACTURER'S INSTALLATION INSTRUCTIONS AND TO COMPLY WITH CITY, STATE, ADA AND TAS CODES AND STANDARDS.

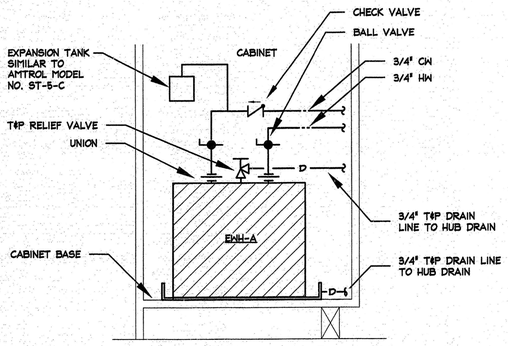


02 WATER HEATER DETAIL
SCALE: NONE

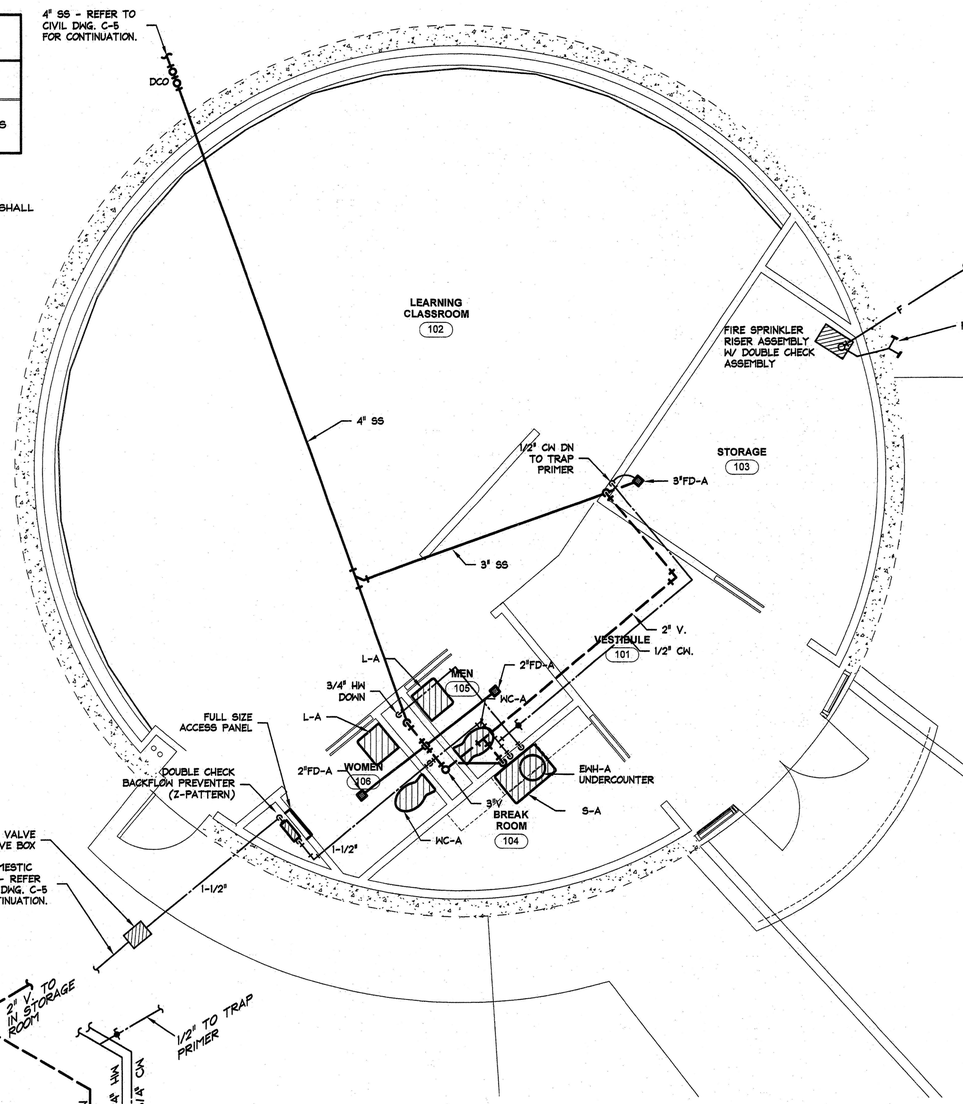


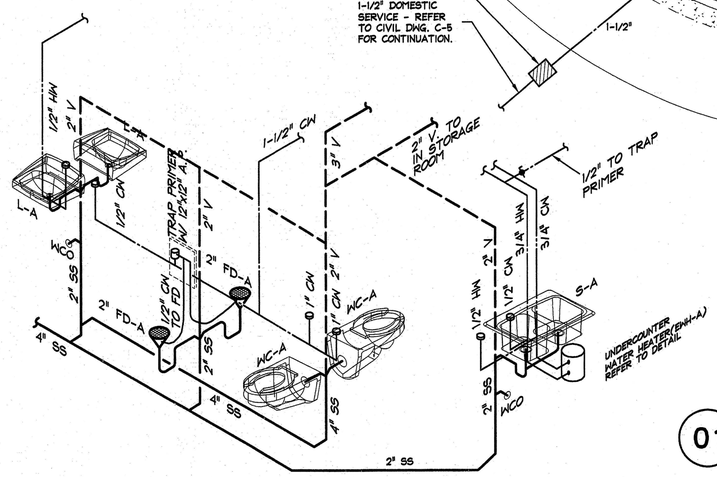


03 PLUMBING RISER DIAGRAM
SCALE: NONE

01 FLOOR PLAN – PLUMBING
SCALE: 1/4" = 1'-0"

N

0 8' 16' 32'
1/16"=1'-0"


S. Taub & Associates, Inc.
Consulting Mechanical / Electrical Engineers
Firm Registration No. – F-1584
4754 Belt Line Road, Dallas, Texas 75244
972/788-0600

cm=Richard L Norris
P.E, ou=S. Taub & Associates, Inc., email=mail@staubandassociates.com, c=US
2011.01.18 11:41:01 -06'00'

FREESE NICHOLS
2220 San Jacinto Blvd., Suite 330
Denton, Texas 76205-7589
Phone - (940) 387-4600
Fax - (940) 387-4677


The seal on this document was authorized by Richard L. Norris, P.E. 100089 on the date shown below.

STATE OF TEXAS — Richard L. Norris — 100089 — REGISTERED PROFESSIONAL ENGINEER

TOWN OF ADDISON, TEXAS
SURVEYOR 1.5 MG EST
M.E.P.
FLOOR PLAN – PLUMBING

| NO. | ISSUE | BY | DATE |
|---|---|---|---|
| | | | |

F&N JOB NO. AD0868459
DATE 01/18/11
DESIGNED GCH
DRAWN TRB
REVISED
CHECKED RLN
FILE NAME 4049-P-1.dwg

VERIFY SCALE Bar is one inch on original drawing. If not one inch on this sheet, adjust scale.
0 1"

SHEET P-1

| | |
|---|---|
| A. | AMPERE |
| AFF | ABOVE FINISHED FLOOR |
| AFG | ABOVE FINISHED GRADE |
| AIC | AMPERES INTERRUPTING CAPACITY |
| AL. | ALUMINUM |
| AMPS | AMPERES |
| ATS | AUTOMATIC TRANSFER SWITCH |
| C. | CONDUIT |
| CB | CIRCUIT BREAKER |
| CKT | CIRCUIT |
| CONT. | CONTINUATION |
| CPT | CONTROL POWER TRANSFORMER |
| CS | COMBINATION STARTER |
| CT | CURRENT TRANSFORMER |
| C/C | CENTER TO CENTER |
| CU | COPPER |
| DP | DIFFERENTIAL PRESSURE |
| EUC | ELECTRIC UTILITY CO. |
| EXIST. | EXISTING |
| FO | FIBER OPTIC |
| FT | FEET |
| FVNR | FULL VOLTAGE NON REVERSING |
| GFI | GROUND FAULT INTERRUPTER |
| GFS | GROUND FAULT SENSING |
| GA. | GAUGE |
| G. | GROUND |
| HOA | HAND-OFF-AUTO SELECTOR SWITCH |
| HP | HORSEPOWER |
| HTR | HEATER |
| HZ | HERTZ |
| ID | INTERNAL DIAMETER |
| IRP | INTERPOSING RELAY PANEL |
| JB | JUNCTION BOX |
| KVA | KILOVOLT-AMPERE |
| KW | KILOWATT |
| LED | LIGHT EMITTING DIODE |
| LTG. | LIGHTING |
| MBFV | MOTOR OPERATED BUTTERFLY VALVE |
| MCB | MAIN CIRCUIT BREAKER |
| MCC | MOTOR CONTROL CENTER |
| MCP | MOTOR CIRCUIT PROTECTOR |
| MFR'S | MANUFACTURER'S |
| MH | MANHOLE |
| MLO | MAIN LUGS ONLY |
| MPR | MOTOR PROTECTION RELAY |
| NF | NON-FUSED |
| O/C | ON CENTER |
| OD | OUTSIDE DIAMETER |
| OHE | OVERHEAD ELECTRIC |
| P | POLE |
| PB | PULL BOX |
| PC | PHOTOCELL |
| ø OR PH | PHASE |
| PL. | PLATE |
| PLC | PROGRAMMABLE LOGIC CONTROLLER |
| PR. | PAIR CABLE |
| PVC | POLYVINYLCHLORIDE CONDUIT |
| RC | REMOTE CONTROL |
| REC. | CIRCUIT RECLOSURE |
| REQD. | REQUIRED |
| RTD | RESISTANCE TEMPERATURE DETECTOR |
| RTU | REMOTE TERMINAL UNIT |
| S/N | SOLID NEUTRAL |
| SHLD. | SHIELD |
| SHT. | SHEET |
| SPD | SURGE PROTECTION DEVICES |
| S.S. | STAINLESS STEEL |
| SSRVS | SOLID-STATE REDUCED VOLTAGE STARTER |
| STA. | STATION |
| STC | SIGNAL TERMINATION CABINET |
| SW. | SWITCH |
| TC | TRAY CABLE OR TERMINATION CABINET |
| TR. | TRIAD |
| (TYP.) | TYPICAL |
| UPS | UNINTERRUPTIBLE POWER SUPPLY |
| UTP | UNSHIELDED TWISTED PAIR CABLE |
| VAR. | VARIABLE |
| V | VOLT |
| VFD | VARIABLE FREQUENCY DRIVE |
| W | WITH, WIRE OR WATT |
| WP | WEATHERPROOF |
| WR | WEATHER RESISTANT |
| XFMR | TRANSFORMER |
| XMTR | TRANSMITTER |

| | |
|---|---|
| 27 | UNDER VOLTAGE RELAY |
| 47/27 | UNDER VOLTAGE AND PHASE SEQUENCE RELAY |
| 49 | THERMAL RELAY |
| 50 | INSTANTANEOUS OVERCURRENT RELAY |
| 50 GS | INSTANTANEOUS GROUND OVERCURRENT RELAY |
| 51 | TIME OVERCURRENT RELAY |
| 51 GS | TIME OVERCURRENT GROUND FAULT RELAY |
| 59 | OVER VOLTAGE RELAY |
| 63 | PRESSURE SWITCH |
| 86 | LOCK OUT RELAY |
| 87 | MOTOR CURRENT DIFFERENTIAL RELAY |
| M | MAIN CONTACTOR |
| BC | BYPASS CONTACTOR |
| ETM | ELAPSED TIME METER |
| CR | A.C. INDUSTRIAL CONTROL RELAY |
| V | VOLTMETER |
| VS | VOLTMETER SWITCH |
| A | AMMETER |
| AS | AMMETER SWITCH |
| W | WATTMETER |
| KWH | KILOWATT-HOUR METER |
| ST | SHUNT TRIP |
| TRP CAP | CAPACITOR TRIP |
| PFR | PHASE FAILURE, PHASE REVERSAL RELAY UNDERVOLTAGE, OVERVOLTAGE RELAY |
| TR | TIMING RELAY AS SPECIFIED (TOE TIMED ON ENERGIZATION TOD TIMED ON DEENERGIZATION) |
| IR | INTERPOSING RELAY |
| 5 | SQUIRREL CAGE INDUCTION MOTOR NUMBER DESIGNATES HORSEPOWER |
| PC | PHOTOCELL |
| PW | PREWIRED |
| PB | PULL BOX |
| MH | MANHOLE |
| M | UTILITY METER |
| M | MOTORIZED LOUVER |
| ▲ | LOCATED AT SCADA RTU |
| ◪ | LOCATED REMOTE |
| ■ | LOCATED AT MOTOR |

| | |
|---|---|
| | NORMALLY OPEN CONTACT |
| | NORMALLY CLOSED CONTACT |
| OL | OVERLOAD CONTACT |
| | LIMIT SWITCH, N.O. |
| | LIMIT SWITCH, N.O. (HELD CLOSED) |
| | LIMIT SWITCH, N.C. |
| | LIMIT SWITCH, N.C. (HELD OPEN) |
| | PRESSURE/VACUUM SWITCH, N.O. |
| | PRESSURE/VACUUM SWITCH, N.C. |
| | LIQUID LEVEL SWITCH, N.O. |
| | LIQUID LEVEL SWITCH, N.C. |
| | TEMP, ACTUATED SWITCH, N.O. |
| | TEMP, ACTUATED SWITCH, N.C. |
| | FLOW SWITCH, (AIR/WATER) N.O. |
| | FLOW SWITCH, (AIR/WATER) N.C. |
| | TIMED CONTACTS, N.O.T.C. (TIMED ON ENERGIZATION) |
| | TIMED CONTACTS, N.C.T.O. (TIMED ON ENERGIZATION) |
| | TIMED CONTACTS, N.O.T.C. (TIMED ON DE-ENERGIZATION) |
| | TIMED CONTACTS, N.C.T.O. (TIMED ON DE-ENERGIZATION) |
| | PUSHBUTTON, N.O. |
| | PUSHBUTTON, N.C. |
| A / P | CIRCUIT BREAKER A=AMP TRIP,P=POLES |
| MCP | MOTOR CIRCUIT PROTECTOR |
| | SURGE CAPACITOR |
| | SURGE ARRESTOR |
| | EMERGENCY STOP (LOCAL/REMOTE) |
| | FUSED SWITCH |
| | SWITCH |
| | MOTOR OVERLOAD |
| | VACUUM CONTACTOR |
| | SPEED POTENTIOMETER |
| X Y Z / X00 / 0X0 | SELECTOR SWITCH ( X / Y / Z ) |

| | |
|---|---|
| | POTENTIAL TRANSFORMER |
| | CURRENT TRANSFORMER |
| | GROUND CURRENT SENSOR TRANSFORMER |
| | CONTROL TRANSFORMER |
| | TRANSFORMER |
| CPT | CONTROL POWER TRANSFORMER |
| | REACTOR |
| | PANEL |
| | STAB |
| | FUSED CONTACTOR DRAWOUT TYPE |
| 52 | DRAWOUT CIRCUIT BREAKER |
| K | KIRK KEY INTERLOCK |
| | MECHANICAL INTERLOCK |
| | FUSE |
| | TERMINAL |
| | NODE |
| | GROUND |
| PTT R | INDICATING LAMP, COLOR INDICATED R=RED, G=GREEN, W=WHITE, A=AMBER, B=BLUE PTT=PUSH TO TEST |
| | DEVICE LOCATED IN FIELD |
| LIT-XX | INSTRUMENT W/TAG |
| MC1-XX, 4 #14, #14G., ¾"C. (2 #14 SPARE) | CABLE TAG FOUR #14 CONTROL OR POWER CONDUCTORS, ONE #14 GROUND CONDUCTOR. ALL CONDUCTORS IN A ¾" CONDUIT. TWO OF THE FOUR #14 CONTROL OR POWER CONDUCTORS ARE SPARE. |
| | FLEXIBLE CONDUIT |
| | HEAT TRACE |
| | WIRING IN CONDUIT EXPOSED |
| | UNDERGROUND WIRING OR WIRING IN CONDUIT CONCEALED |
| OHE | OVERHEAD ELECTRIC LINE |
| UGE | UNDERGROUND ELECTRIC LINE |
| OHP | OVERHEAD PRIMARY LINE |
| UGP | UNDERGROUND PRIMARY LINE |
| OHS | OVERHEAD SECONDARY LINE |
| UGS | UNDERGROUND SECONDARY LINE |
| OHC | OVERHEAD COMMUNICATION LINE |
| UGC | UNDERGROUND COMMUNICATION LINE |
| OHFO | OVERHEAD FIBER OPTIC LINE |
| UGFO | UNDERGROUND FIBER OPTIC LINE |
| | CONDUIT TURNED UP |
| | CONDUIT TURNED DOWN |

| | |
|---|---|
| | NON-FUSED DISCONNECT SWITCH |
| | FUSED DISCONNECT SWITCH |
| | COMBINATION MOTOR STARTER SWITCH |
| $ | SINGLE POLE SWITCH |
| $m | MANUAL MOTOR STARTER |
| $3 | THREE WAY SWITCH |
| $4 | FOUR WAY SWITCH |
| $D | DIMMING SWITCH |
| WP,GFI | DUPLEX RECEPTACLE, GROUNDED TYPE WP=WEATHERPROOF/GFI=GROUND FAULT INTERRUPTER |
| | QUADPLEX RECEPTACLE, GROUNDED TYPE |
| | QUADPLEX RECEPTACLE, ABOVE COUNTER |
| | DUPLEX RECEPTACLE, ABOVE COUNTER |
| | SIMPLEX RECEPTACLE, GROUNDED TYPE |
| F | FLOOR MOUNTED RECEPTACLE |
| T | THERMOSTAT |
| | EXIT LIGHT (DARKENED AREA REPRESENTS FACE ORIENTATION) |
| | CEILING MOUNTED STROBE |
| | WALL MOUNTED STROBE |
| | SMOKE DETECTOR |
| | HEAT DETECTOR |
| | HORN |
| | COMBINATION STROBE/HORN |
| J | JUNCTION BOX |
| J | JUNCTION |
| | DATA |
| | TELEPHONE |
| | TELEPHONE/DATA |
| | FLOOR MOUNTED DATA OUTLET |
| | FLOOR MOUNTED TELEPHONE OUTLET |
| | POKE-THRU DEVICE COMBINATION POWER/DATA/VOICE OUTLET |
| | FLOOR COMBINATION POWER/DATA/VOICE OUTLET |
| | CATV |
| G | GROUND ROD |
| | GROUND ROD TEST WELL |
| LA-2 | HOMERUN, PANELBOARD CIRCUIT AS INDICATED |
| PP | POWER POLE |
| | EMERGENCY BATTERY PACK LIGHT FIXTURE |
| b A | LIGHTING FIXTURE A=FIXTURE TYPE b=SWITCH NUMBER |

SHEET NUMBER WHERE TAKEN — NUMBER — SHEET NUMBER WHERE DRAWN

REFERENCE — RE: IDENTIFIER X/X-XX SHEET NUMBER

**NOTE:**
THIS IS A STANDARD LEGEND. THEREFORE, NOT ALL OF THIS INFORMATION MAY BE USED ON THIS PROJECT.

REFERENCES: N:\elec\Rose\JWM-STAMP.dwg N:\Standard\34BORDER.DWG 95784.dwg

Date: Jan 18, 2011 - 2:02pm User: ppm File: N:\elec\EL-ADD-GN-LGND.dwg

Freese and Nichols, Inc.
Texas Registered Engineering Firm F-2144

STATE OF TEXAS — JAMES W. MURPHY — 95784 — LICENSED PROFESSIONAL ENGINEER

FREESE NICHOLS
2220 San Jacinto Blvd., Suite 330
Denton, Texas 76205-7589
Phone - (940) 387-4600
Fax - (940) 387-4677

TOWN OF ADDISON, TEXAS
SURVEYOR 1.5 MG EST
ELECTRICAL
LEGEND

| | | | | | | | |
|---|---|---|---|---|---|---|---|
| NO. | ISSUE | BY: | DATE | F&N JOB NO. | ADD08459 | | |
| | | | | DATE | 01/18/11 | | |
| | | | | DESIGNED | JWM | | |
| | | | | DRAWN | JAF | | |
| | | | | REVISED | | | |
| | | | | CHECKED | JNH | | |
| | | | | FILE NAME | EL-ADD-GN-LGND.dwg | | |

VERIFY SCALE Bar is one inch on original drawing. If not one inch on this sheet, adjust scale. 0 1"

SHEET E-1

SEQ.

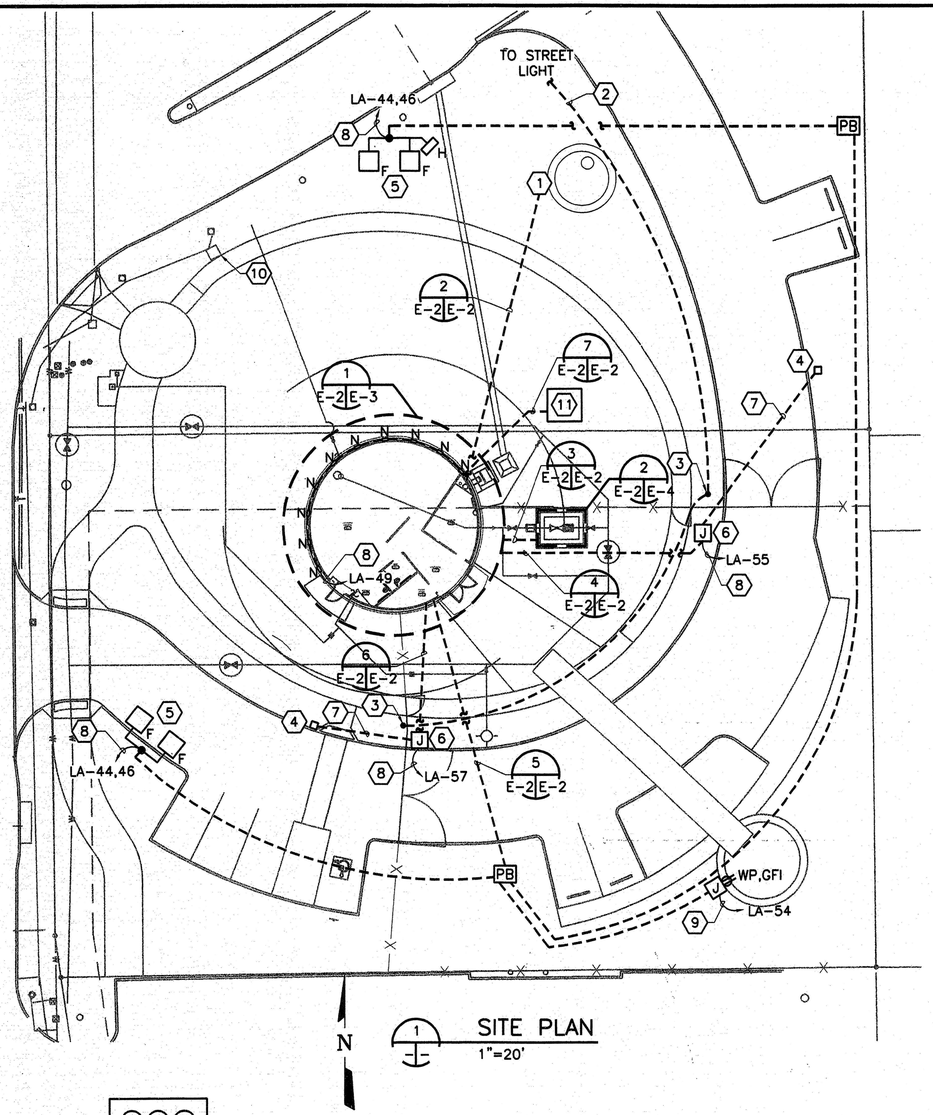


1 SITE PLAN
1"=20'

## GENERAL NOTES:

1. CONTRACTOR SHALL COORDINATE POWER WITH UTILITY COMPANY. ALL COORDINATION WITH THE UTILITY COMPANY SHALL BE ROUTED THROUGH THE TOWN OF ADDISON.
2. THE DEMONSTRATION TURBINE WILL HAVE TEMPORARY POWER FROM THE UTILITY COMPANY. CONTRACTOR SHALL BE RESPONSIBLE TO PROVIDE PERMANENT POWER TO THE DEMONSTRATION UNIT.

## NOTES BY SYMBOL "⬡"

1. DEMONSTRATION WIND TURBINE WILL BE INSTALLED UNDER SEPARATE CONTRACT. CONTRACTOR SHALL MAKE ALL EFFORTS TO AVOID DAMAGE TO WIND TURBINE AND EQUIPMENT.
2. PROVIDE 1" PVC CONDUIT TO THE NEAREST STREET LIGHT. CONTRACTOR SHALL COORDINATE WITH UTILITY COMPANY.
3. CONTRACTOR SHALL INSTALL LIGHT POLES BASES AS SHOWN ON DETAIL 213-30/E-11. CONTRACTOR SHALL INSTALL LIGHT POLE PROVIDED BY THE TOWN. CONTRACTOR SHALL PROVIDE 1" PVC CONDUIT TO CONNECT WITH STREET LIGHTS ON ARAPAHO ROAD.
4. PROVIDE ACCESS CONTROL SYSTEM CARD READER.
5. CONTRACTOR SHALL PROVIDE SHIELDS ON LIGHT FIXTURES AND ADJUST SHIELDS TO PREVENT SHOOTING LIGHT PAST THE BOWL.
6. RE: 5/E-10 FOR GATE OPERATORS AND INSTALLATION DETAILS.
7. PROVIDE 1"C. FOR ACCESS CARD READER.
8. PROVIDE 2 #10, #10G., 1"C.
9. PROVIDE 2 #12, #12G., 1"C.
10. LOCATION OF ELECTRIC VAULT THAT MIGHT POWER LIGHTS. CONTRACTOR SHALL FIELD VERIFY.
11. TRANSFORMER PAD LOCATION SHALL BE COORDINATED WITH UTILITY COMPANY. CONTRACTOR SHALL COORDINATE ALL TRENCH WORK, ELBOWS, CONDUIT, CONCRETE WORK, AND INSPECTIONS REQUIRED WITH UTILITY COMPANY.

① ② ③ ④

| | | |
|---|---|---|
| 1 | BRK-011C | 2"C. |
| 2 | COMM-11C | 2"RGS |
| 3 | INV-11P | 2"RGS |
| 4 | LA-47 | 2"C. |

2 DUCT BANK DETAIL
NOT TO SCALE

① ② ③ ④ ⑤ ⑥

| | | |
|---|---|---|
| 1 | LA-48<br>LA-53<br>LA-51 | 2"C. |
| 2 | PIT-01C<br>PIT-02C | 2"RGS |
| 3 | VLV-01C<br>VLTH-01C | 2"C. |
| 4 | SPARE | 2"C. |
| 5 | SPARE | 2"C. |
| 6 | SPARE | 2"C. |

3 DUCT BANK DETAIL
NOT TO SCALE

① ② ③ ④

| | | |
|---|---|---|
| 1 | LA-55 | 2"C. |
| 2 | SPARE | 2"C. |
| 3 | SPARE | 2"C. |
| 4 | SPARE | 2"C. |

4 DUCT BANK DETAIL
NOT TO SCALE

① ②

| | | |
|---|---|---|
| 1 | LA-44,46<br>LA-54 | 2"C. |
| 2 | SPARE | 2"C. |

5 DUCT BANK DETAIL
NOT TO SCALE

① ② ③ ④

| | | |
|---|---|---|
| 1 | LA-57 | 2"C. |
| 2 | SPARE | 2"C. |
| 3 | SPARE | 2"C. |
| 4 | SPARE | 2"C. |

6 DUCT BANK DETAIL
NOT TO SCALE

① ②

| | | |
|---|---|---|
| 1 | UTIL-01P | 3"C. |
| 2 | UTIL-01P | 3"C. |

7 DUCT BANK DETAIL
NOT TO SCALE

0 20' 40'
SCALE IN FEET

Freese and Nichols, Inc.
Texas Registered Engineering Firm F-2144

STATE OF TEXAS
JOHN W.P. MANNING
95784
LICENSED PROFESSIONAL ENGINEER
1/18/2011

FREESE NICHOLS
2220 San Jacinto Blvd, Suite 330
Denton, Texas 76205-7589
Phone - (940) 387-4600
Fax - (940) 387-4677

TOWN OF ADDISON, TEXAS
SURVEYOR 1.5 MG EST
ELECTRICAL
SITE PLAN

| NO. | ISSUE | BY | DATE |
|---|---|---|---|
| | | | |

F&N JOB NO. ADD08459
DATE 01/18/11
DESIGNED JWM
DRAWN JAF
REVISED
CHECKED JNH
FILE NAME EL-ADD-PL-SITE.dwg

Bar is one inch on original drawing. If not one inch on this sheet, adjust scale.
VERIFY SCALE 0 1"

SHEET E-2
SEQ.

ACAD Rel 18.0s (LMS Tech) User: ppm
[ADD08459][OTHSPV2] N:\elec\EL-ADD-PL-SITE.dwg LAYOUT: EL-ADD-PL-SITE
Jan 18, 2011 - 4:03pm PSLTs: 1 TWIST: CLUALLFREESE.COM
REFERENCES: N:\elec\Base\JWM-STAMP.dwg N:\Standard\34BORDER.DWG N:\IF\Base\CV-UTIL-PL-EST-ADDISON.dwg 95784.dwg

Date: Jan 18, 2011 - 4:03pm User: ppm File: N:\elec\EL-ADD-PL-SITE.dwg

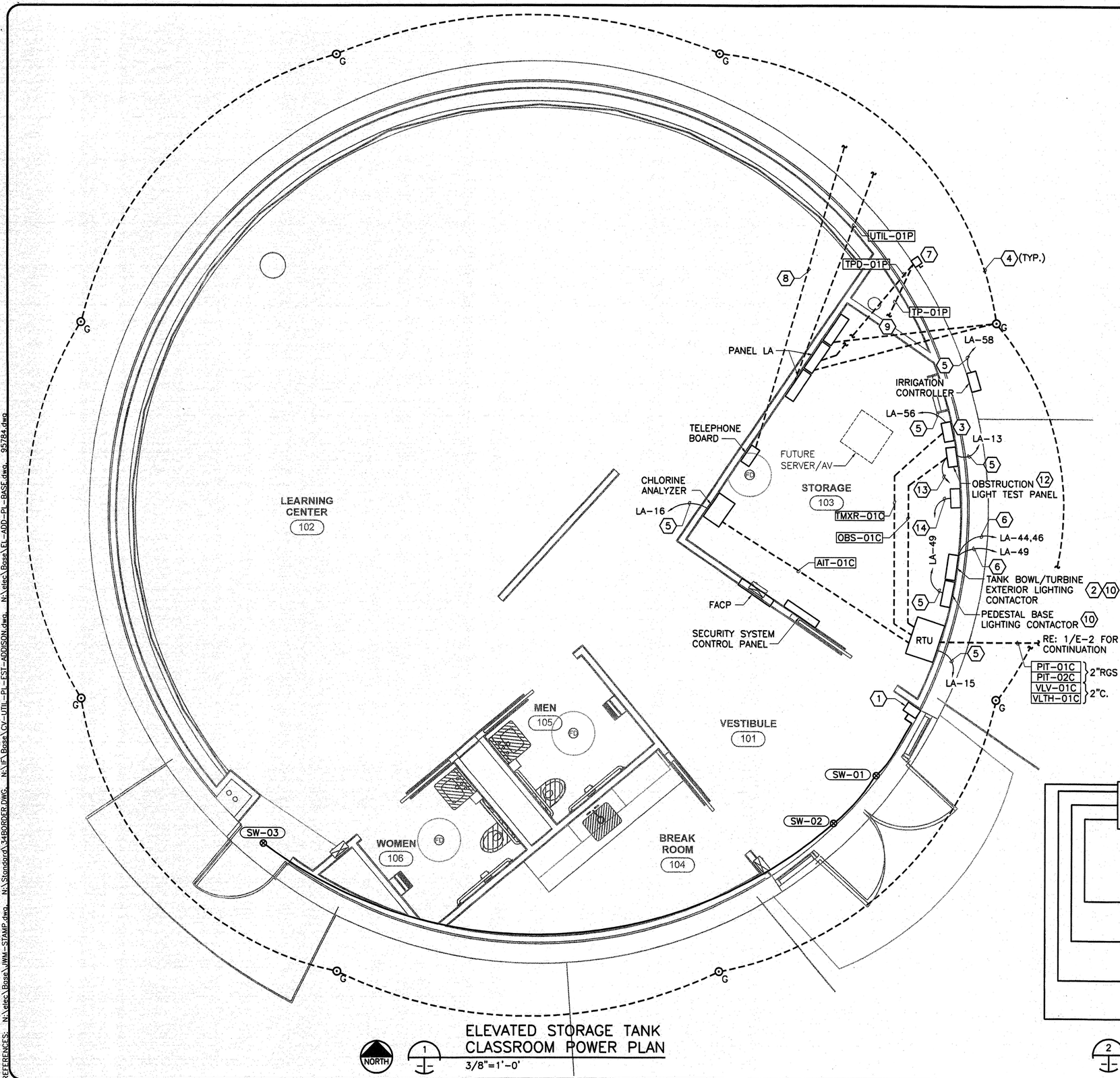


1 ELEVATED STORAGE TANK CLASSROOM POWER PLAN
3/8"=1'-0'

## GENERAL NOTES:

1. INTERCONNECTION DIAGRAM SHOWS MINIMUM CONDUIT SIZES. CONTRACTOR SHALL ROUTE POWER, DISCRETE, ANALOG, AND COMMUNICATION IN SEPARATE CONDUITS BUT CAN COMBINE SAME TYPE SIGNAL CONDUCTORS.
2. LIGHTING CIRCUITS REQUIRE PHOTOCELLS FOR OPERATION. CONTRACTOR SHALL LOCATE PHOTOCELLS ON NORTH SIDE OF PEDESTAL.
3. SPARE CONDUITS ENTERING PEDESTAL BASE SHALL BE STUBBED OUT OF FLOOR 3" AND SHALL BE CAPPED. EACH CONDUIT SHALL BE IDENTIFIED WITH STAINLESS STEEL TAGS LABELING THE TERMINATION LOCATION OF THE OTHER END.

## NOTES BY SYMBOL " "

1. CONTRACTOR SHALL PROVIDE GEMINI P9600 SECURITY CONTROL PANEL. SECURITY SYSTEM SHALL BE INSTALLED BY BONDED AND CERTIFIED SECURITY SYSTEM COMPANY.
2. PEDESTAL LIGHTING SHALL BE INCLUDED IN BID ALTERNATE ITEM NO.46.
3. CONTRACTOR SHALL INSTALL TANK MIXER CONTROL PANEL. CONTRACTOR SHALL COORDINATE CONDUCTOR LENGTHS WITH MIXER SUPPLIER.
4. PROVIDE BARE #2/0 GROUNDING CONDUCTOR.
5. PROVIDE 2 #12, #12G., ¾"C.
6. PROVIDE 2 #10, #10G., 1"C.
7. PROVIDE 240V, 3ø, 4W, 400A, NF DISCONNECT LABELED PER ONCOR REQUIREMENTS.
8. PROVIDE TWO 4" PVC CONDUITS TO PHONE PEDESTAL. COORDINATE PHONE PEDESTAL LOCATION WITH OWNER.
9. CONTINUATION TO PANEL TP.
10. PROVIDE LIGHTING CONTACTORS WITH LIGHTING CONTROLS PER SCHEMATICS.
11. CONTRACTOR SHALL SIZE COAX BASED ON LINE LOSSES.
12. PROVIDE OBSTRUCTION LIGHT TEST PANEL. PANEL SHALL BE CROUSE-HINDS OLC CATALOG NO.750005-3. PROVIDE 2 HOUR BATTERY BACK TO MAINTAIN POWER TO OBSTRUCTION LIGHT.
13. PROVIDE 2 #10, #10G., 1"C. FROM CONTROL PANEL TO MIXER TERMINATION CABINET LOCATED ON TOP OF STORAGE TANK.
14. PROVIDE 2" CONDUIT AND PULL STRING TO THE TOP OF THE BOWL FROM 24"W X 30"H X 12"D NEMA 12 ENCLOSURE. ENCLOSURE SHALL BE PROVIDED BY CONTRACTOR. PROVIDE 2 #12, #12G. TO DEDICATED CIRCUIT IN PANEL LA AND INSTALL RECEPTACLE INSIDE THE ENCLOSURE.

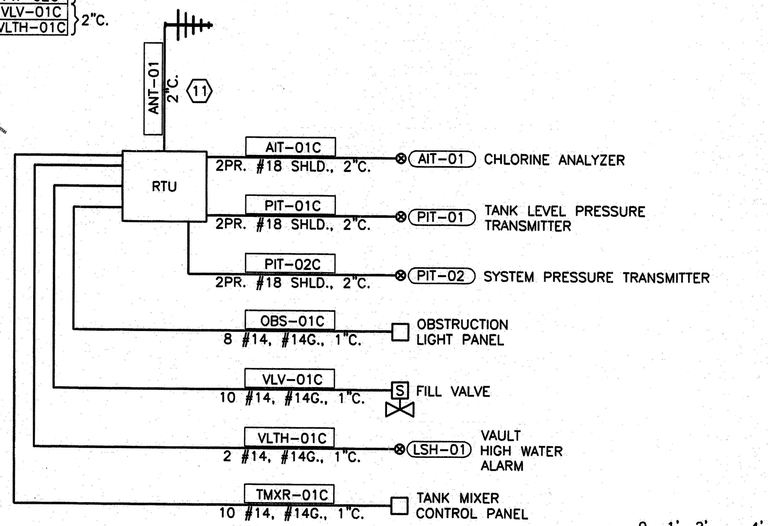


2 INTERCONNECTION DIAGRAM
NOT TO SCALE

0 1' 2' 4'
3/8"=1'-0

Freese and Nichols, Inc.
Texas Registered Engineering Firm F-2144

STATE OF TEXAS
John W. Hammond
95784
LICENSED
PROFESSIONAL ENGINEER
1/18/2011

FREESE NICHOLS
2220 San Jacinto Blvd., Suite 330
Denton, Texas 76205-7588
Phone - (940) 387-4600
Fax - (940) 387-4677

TOWN OF ADDISON, TEXAS
SURVEYOR 1.5 MG EST

ELECTRICAL
ELEVATED STORAGE TANK
CLASSROOM POWER PLAN

| NO. | ISSUE | BY | DATE |
|---|---|---|---|

F&N JOB NO. ADD08459
DATE 01/18/11
DESIGNED JWM
DRAWN JAF
REVISED -
CHECKED JNH
FILE NAME EL-ADD-PL-POWR.dwg

VERIFY SCALE Bar is one inch on original drawing. If not one inch on this sheet, adjust scale.
0 1"

SHEET E-3
SEQ.

[ADD08459][DTNSRV2] N:\elec\EL-ADD-PL-POWR.dwg LAYOUT: EL-ADD-PL-PWR
JOB: 1 PSLTS: 1 TWIST: CLUAU.FREESE.COM
Jan 18, 2011 - 6:46pm N:\Standard\34890RDER.DWG N:\VFL Base\CV-UTIL-PL-EST-ADDISON.dwg N:\elec\Base\EL-ADD-PL-BASE.dwg
REFERENCES: N:\elec\Base\VHM-STAMP.dwg N:\elec\Base\VHM-STAMP.dwg N:\VFL Base\EL-ADD-PL-BASE.dwg 95784.dwg

Date: Jan 18, 2011 - 6:46pm User: jwm File: N:\elec\EL-ADD-PL-POWR.dwg

## GENERAL NOTES:

1. CONDUITS ROUTED TO JUNCTION BOXES IN THE VAULT SHALL TERMINATE THE TOP HALF OF THE JUNCTION BOX. CONDUIT DRAINS SHALL TERMINATE THE BOTTOM OF THE JUNCTION BOX.
2. CONDUITS IN THE VAULT SHALL BE RIGID ALUMINUM.
3. CONTRACTOR SHALL PROVIDE LIGHTNING PROTECTION IN ACCORDANCE WITH LP1 AND TURBINE MANUFACTURER RECOMMENDATIONS.
4. CONDUITS ROUTED ON TOP OF TANK BOWL SHALL BE COORDINATED WITH TANK BOWL FABRICATOR SUCH THAT FABRICATOR PROVIDES STUDS WELDED TO TANK BOWL ALLOWING CHANNEL UNISTRUT TO BE SECURED FOR CONDUIT SUPPORTS.

## NOTES BY SYMBOL "⬡"

1. PROVIDE 2 #12, #12G., ¾"C. TO TANK MIXER SYSTEM. CONTRACTOR SHALL COORDINATE CABLE ROUTING WITH TANK MANUFACTURER AND TANK MIXER MANUFACTURER.
2. PROVIDE JUNCTION BOX FOR ANALOG SIGNALS. PROVIDE CONDUIT DRAIN ON ENCLOSURE.
3. PROVIDE JUNCTION BOX FOR DIGITAL SIGNALS. PROVIDE CONDUIT DRAIN ON ENCLOSURE.
4. PROVIDE JUNCTION BOX FOR 120V POWER. PROVIDE CONDUIT DRAIN ON ENCLOSURE.
5. CONDUITS ENTERING/LEAVING VAULT SHALL BE SEALED WITH LINK SEAL.
6. COORDINATE CONDUIT ACCESS THROUGH THE MANWAY WITH BOWL MANUFACTURER.
7. CONTRACTOR SHALL PROVIDE PANEL TP AND POWER METER, RE: 1/E-5.
8. CONTRACTOR SHALL INSTALL EQUIPMENT FROM TURBINE MANUFACTURER, RE: E-5 AND E-6.
9. RECEPTACLES SHALL BE MOUNTED 2'-0" AFF.
10. PROVIDE SUMP PUMP WITH INTEGRAL FLOAT.
11. CONTRACTOR SHALL SIZE CONDUIT BASED ON NATIONAL ELECTRICAL CODE. MULTIPLE CONDUITS IS SUGGESTED.
12. PRESSURE TRANSMITTER SHALL INCLUDE 3-WAY BLOCK AND BLEED VALVE AND ISOLATION VALVE.
13. VENTILATION FAN SHALL BE MOUNTED TO THE TOP OF VALVE VAULT. ROUTE CONDUIT AND CONDUCTORS PER MANUFACTURERS RECOMMENDATION. CONDUIT SHALL NOT BE ROUTED ON VALVE VAULT TOP.
14. CONDUITS REQUIRED THROUGH THE ACCESS TUBE (TO THE TOP OF THE ELEVATED STORAGE TANK) SHALL BE ROUTED AND SUPPORTED ON THE WALKWAY.
15. POWER TO EMERGENCY LIGHTING SHALL BE ROUTED THROUGH THE RECEPTACLE AS A MEANS OF DISCONNECT.
16. LIGHTS IN VALVE VAULT SHALL BE MOUNTED 6'-0" AFF.
17. SWITCHES SHALL BE MOUNTED NEAR TOP OF LADDER NEAR HATCH.
18. MOUNT FLOAT TO ACTIVATE AT 6" AFF.

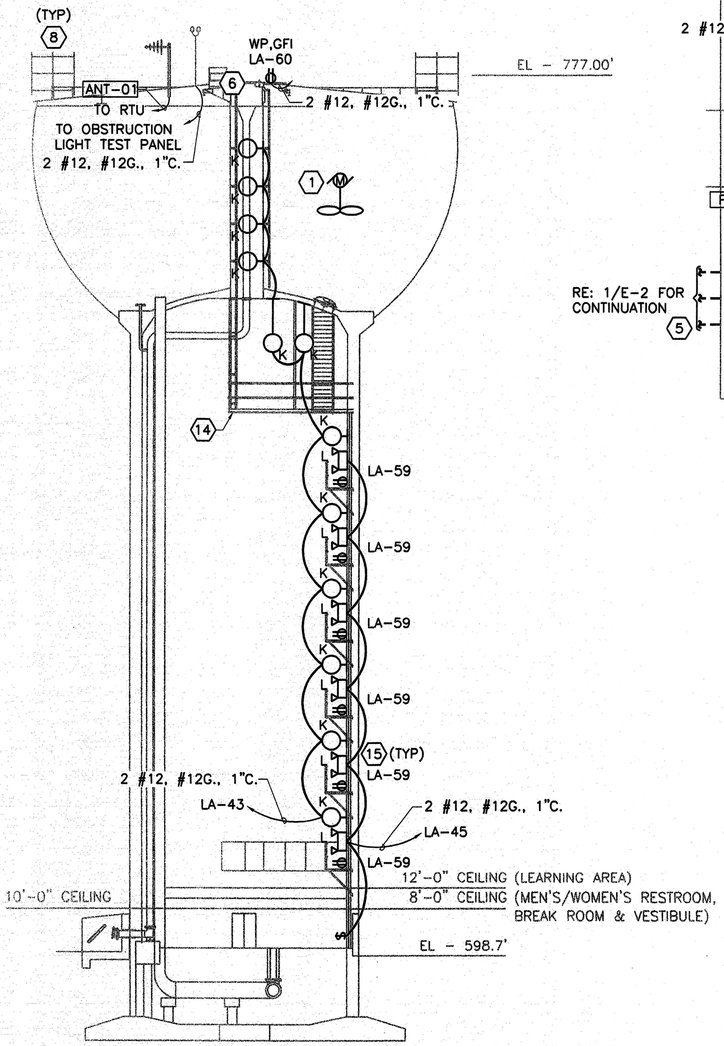


1 TANK ELEVATION
1/16"=1'-0"

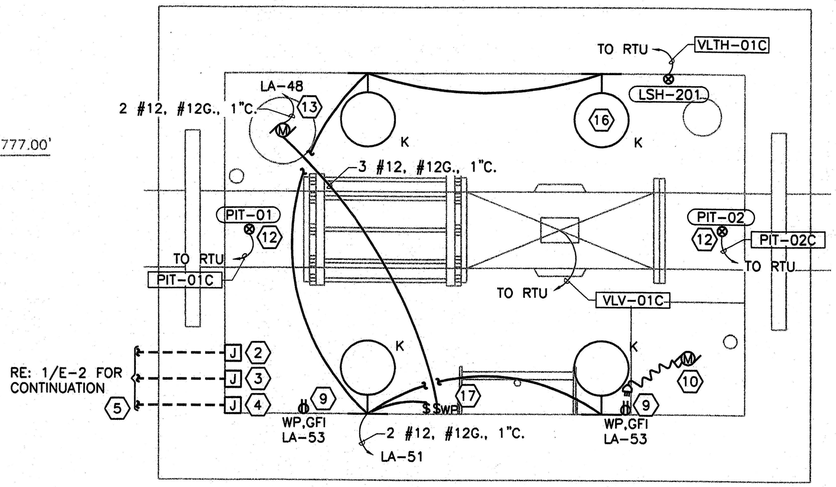


NORTH 2 VALVE VAULT
3/4"=1'-0"

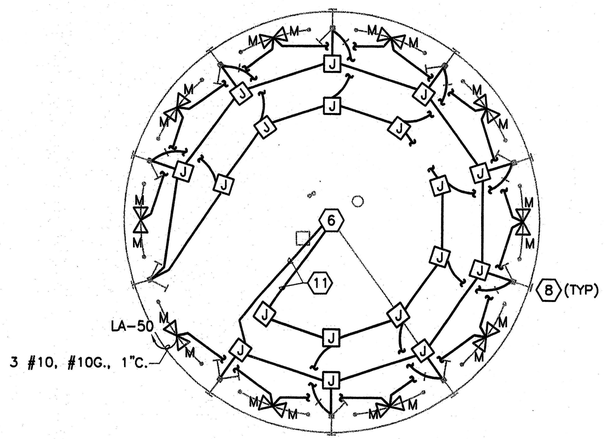


NORTH 3 ROOF LIGHTING & TURBINE PLAN
1/16"=1'-0"

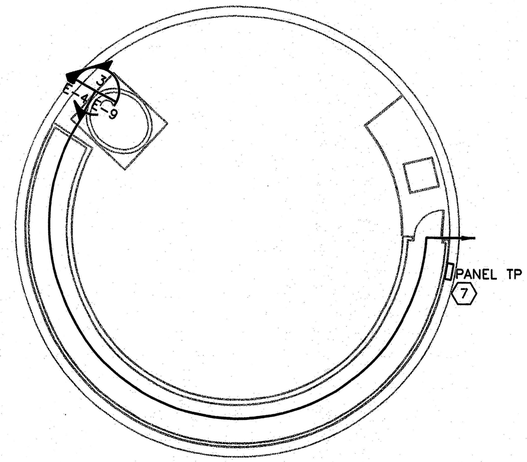


NORTH 4 PARTIAL RING BALCONY & RAIL DETAIL
1/8"=1'-0"

0 4' 8' 16'
1/8"=1'-0"
0 8' 16' 32'
1/16"=1'-0"
0 6" 1' 2'
3/4"=1'-0


Freese and Nichols, Inc.
Texas Registered Engineering Firm F-2144

FREESE AND NICHOLS
2220 San Jacinto Blvd., Suite 330
Denton, Texas 76205-7580
Phone - (940) 387-4600
Fax - (940) 387-4677


TOWN OF ADDISON, TEXAS

SURVEYOR 1.5 MG EST

ELECTRICAL

TANK ELEVATION & FLOW CONTROL VALVE VAULT

| NO. | ISSUE | BY | DATE |
|---|---|---|---|
| | | | |

VERIFY SCALE Bar is one inch on original drawing. If not one inch on this sheet, adjust scale.
0 1"

| | |
|---|---|
| F&N JOB NO. | ADD08459 |
| DATE | 01/18/11 |
| DESIGNED | JWM |
| DRAWN | JAF |
| REVISED | - |
| CHECKED | JNH |
| FILE NAME | EL-ADD-PL-ELEV.dwg |

SHEET E-4

SEQ.


ACAD Rel 18.0s (LMS Tech) User: ppm
ADD08459[DNSRV2] N:\elec\EL-ADD-PL-ELEV.dwg LAYOUT: EL-ADD-PL-ELEV
Jan 18, 2011 - 4:18pm LTS: 1 PSLTS: 1 TWIST: CLUALLFREESE.COM
REFERENCES: N:\elec\Base\JWM-STAMP.dwg, N:\Standard\34BORDER.DWG, N:\IFC Base\cv-util-pl-lonkelevation.dwg, N:\IFC Base\cv-util-pl-valvevault.dwg, N:\IFC Base\cv-util-pl-Bowl.dwg, N:\IFC Base\Mezzoninel.evelBackground-1.17.2011.dwg, 95784.dwg, N:\IFC Base\cv-util


Date: Jan 18, 2011 - 4:18pm User: ppm File: N:\elec\EL-ADD-PL-ELEV.dwg

## GENERAL NOTES

1. EQUIPMENT SHOWN ON THIS ONE-LINE IS BASED FROM A SINGLE EQUIPMENT SUPPLIER. IT IS THE CONTRACTOR'S RESPONSIBILITY TO VERIFY ALL EQUIPMENT MANUFACTURERS REQUIRE, RECOMMEND, AND PROVIDE. CONTRACTOR SHALL COORDINATE ALL REQUIRED LABOR AND SCOPE WITH EQUIPMENT SUPPLIER PRIOR TO BIDS.

## NOTES BY SYMBOL "⬡"

1. CONTRACTOR SHALL PROVIDE AND INSTALL 5KVA, 240-208Y/120V, 3 PHASE TRANSFORMER. PROVIDE 316 STAINLESS STEEL MOUNTING HARDWARE REQUIRED.
2. CONTRACTOR SHALL PROVIDE 400A DISCONNECT. LOCATE OUTSIDE TANK PEDESTAL AS DISCONNECTING MEANS FOR UTILITY COMPANY.
3. CONTRACTOR SHALL PROVIDE 3ø, 4W, 42 POLE, 208Y/120V, 22KAIC.
4. CONTRACTOR SHALL COORDINATE REQUIRED METER BASE AND METER WITH UTILITY COMPANY.

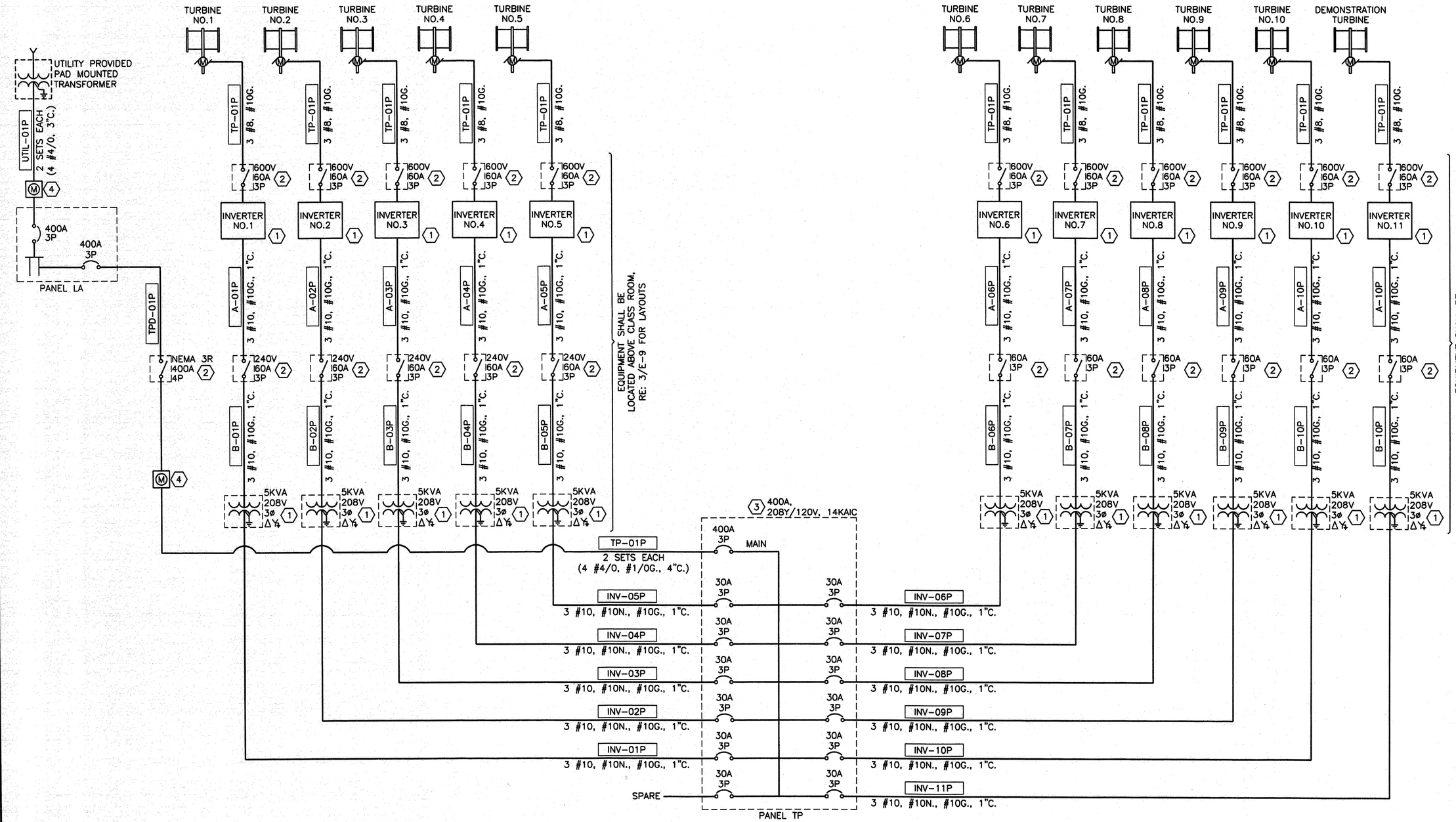


1 ONE-LINE DIAGRAM
NOT TO SCALE


Freese and Nichols, Inc.
Texas Registered Engineering Firm F-2144
JOHN W.P. MANNING 95784 LICENSED PROFESSIONAL ENGINEER
1/18/11
FREESE NICHOLS
2220 San Jacinto Blvd, Suite 330
Denton, Texas 76205-7589
Phone - (940) 387-4600
Fax - (940) 387-4677


TOWN OF ADDISON, TEXAS

SURVEYOR 1.5 MG EST

ELECTRICAL

ONE-LINE DIAGRAM

| F&N JOB NO. | ADD08459 |
|---|---|
| DATE | 01/18/11 |
| DESIGNED | JWM |
| DRAWN | JAF/VMC |
| REVISED | |
| CHECKED | JNH |
| FILE NAME | EL-ADD-DG-ONEL.dwg |

| NO. | ISSUE | BY | DATE |
|---|---|---|---|

VERIFY SCALE Bar is one inch on original drawing. If not one inch on this sheet, adjust scale. 0 1"

SHEET E-5

SEQ.


ACAD Rel 18.0s (LMS Tech) User: jwm LAYOUT: EL-ADD-DG-ONEL
[ADD08459][DTNSRV21] N:\elec\EL-ADD-DG-ONEL.dwg PSLTS: 1 TWIST: CLUALLFREESE.COM
Jan 18, 2011 - 5:33pm LTS: 1
REFERENCES: N:\elec\Fpse\JWM-STAMP.dwg N:\Standard\34BORDER.DWG 95784.dwg

## GENERAL NOTES

1. CONTRACTOR SHALL BE RESPONSIBLE TO PERFORM TEST ON THE CAT5e CONDUCTORS AFTER CONNECTIONS ARE MADE. PROVIDE RJ45 CONNECTORS ON BOTH ENDS OF CAT5e CONDUCTORS.
2. EQUIPMENT SHOWN ON THIS ONE-LINE IS BASED FROM A SINGLE EQUIPMENT SUPPLIER. IT IS THE CONTRACTORS RESPONSIBILITY TO VERIFY ALL EQUIPMENT MANUFACTURERS REQUIRE, RECOMMEND, AND PROVIDE. CONTRACTOR SHALL COORDINATE ALL REQUIRED LABOR AND SCOPE WITH EQUIPMENT SUPPLIER PRIOR TO BIDS.

## NOTES BY SYMBOL "⬡"

1. CONTRACTOR SHALL INSTALL. PROVIDE MOUNTING HARDWARE REQUIRED.

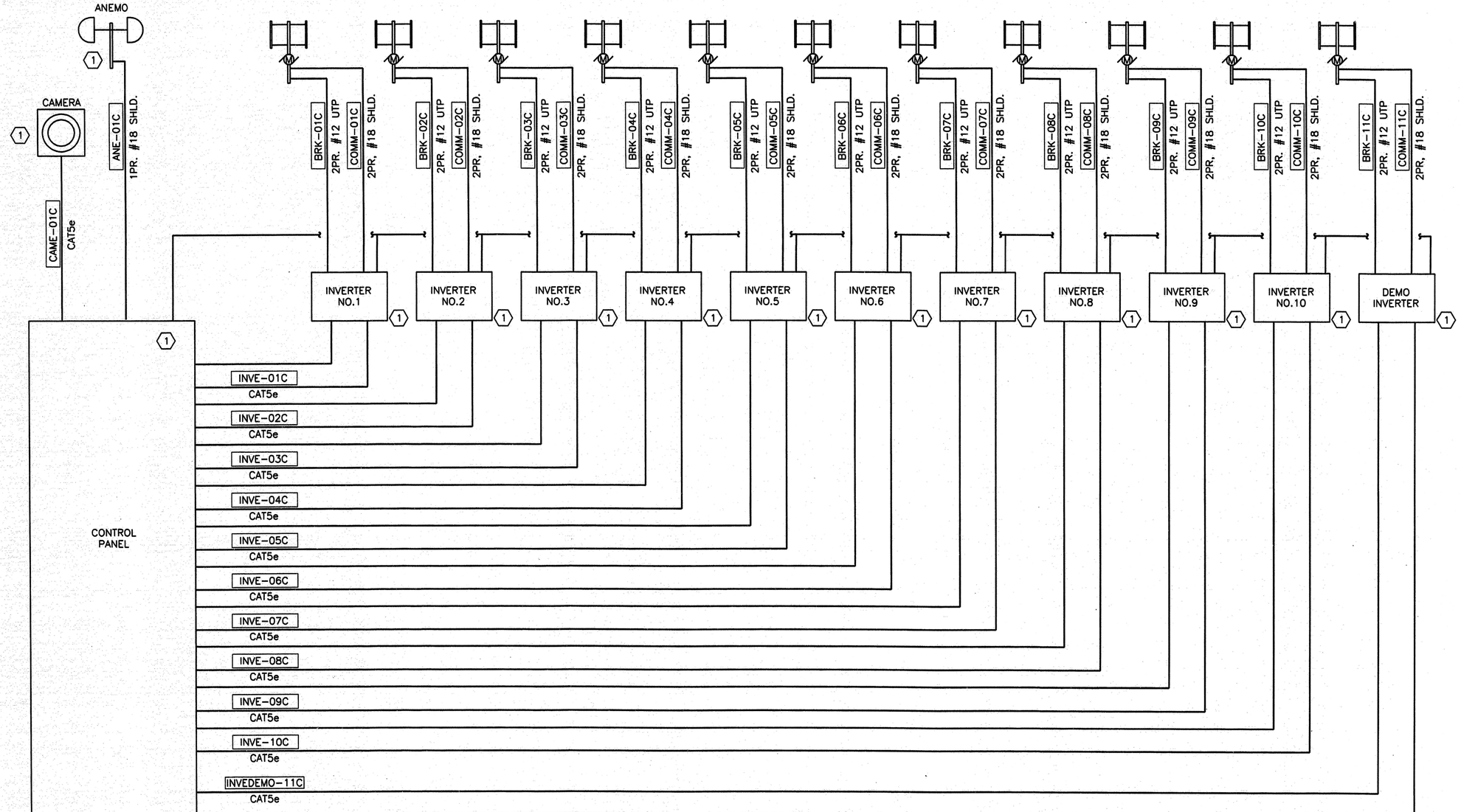


1 TURBINE INTERCONNECTION DIAGRAM
NOT TO SCALE

Freese and Nichols, Inc.
Texas Registered Engineering Firm F-2144

STATE OF TEXAS
JOHN W.P. MANNING
95784
PROFESSIONAL ENGINEER
1/18/2011

FREESE NICHOLS
2220 San Jacinto Blvd., Suite 330
Denton, Texas 76205-7589
Phone - (940) 387-4680
Fax - (940) 387-4677

TOWN OF ADDISON, TEXAS
SURVEYOR 1.5 MG EST
ELECTRICAL
TURBINE INTERCONNECTION DIAGRAM

| NO. | ISSUE | BY | DATE |
|---|---|---|---|

F&N JOB NO. ADD08459
DATE 01/18/11
DESIGNED JWM
DRAWN JAF/VMC
REVISED
CHECKED JNH
FILE NAME EL-ADD-DG-INTR.dwg

VERIFY SCALE Bar is one inch on original drawing. If not one inch on this sheet, adjust scale.
0 1"

SHEET E-6
SEQ.

N:\elec\EL-ADD-DG-INTR.dwg LAYOUT: EL-ADD-DG-INTR
Jan 18, 2011 - 2:03pm LTS: 1 PSLTS: 1 TWIST:
REFERENCES: N:\elec\Base\JWM-STAMP.dwg N:\Standard\24BORDER.DWG 95784.dwg

Date: Jan 18, 2011 - 2:03pm User: ppm File: N:\elec\EL-ADD-DG-INTR.dwg

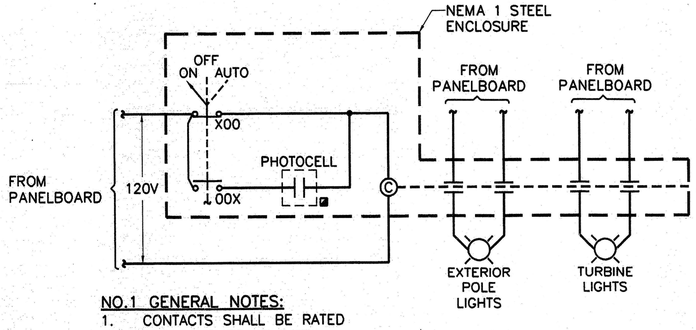


NO.1 GENERAL NOTES:

1. CONTACTS SHALL BE RATED FOR 20 AMPS AT 240V.

## 1 BOWL LIGHTING AND TURBINE LIGHTING CONTACTOR CONTROL SCHEMATIC

NOT TO SCALE

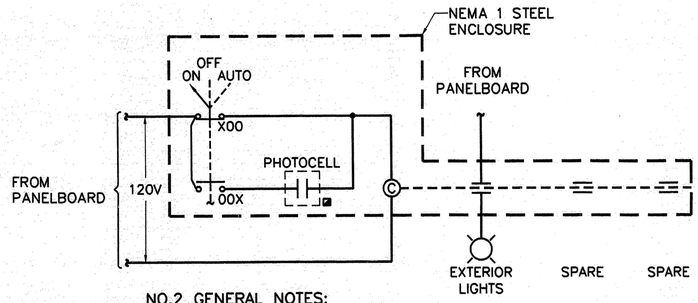


NO.2 GENERAL NOTES:

1. CONTACTS SHALL BE RATED FOR 20 AMPS AT 240V.

## 2 EXTERIOR PEDESTAL LIGHTING CONTACTOR CONTROL SCHEMATIC

NOT TO SCALE

### LIGHTING FIXTURE SCHEDULE

| FIXTURE | TYPE | MANUFACTURER | CATALOG NO. | VOLT. | DESCRIPTION |
|---|---|---|---|---|---|
| | F | LITHONIA | FIXTURE: 55V-RMA-208-TS-LPI-SWCA-DDB<br>POLE: STSH-25-6-4B-VD-TP-WCH-DDB | 208 | VERTICAL LAMP HIGH PERFORMANCE 400W PULSE START METAL HALIDE FLOOD LIGHT WITH MEDIUM DISTRIBUTION, TENON SLIP FITTING MOUNTING, AND DARK BRONZE FINISH. |
| | H | KIM LIGHTING | AFL12-70PMH208 | 208 | FLOOD LIGHT |
| | K | CROUSE-HINDS | VF G24 P21 | 120 | VF SERIES FIXTURE WITH TWO (2) 9W COMPACT FLUORESCENT LAMPS. CLEAR GLASS GLOBE AND WIRE GUARD. PENDANT MOUNT 3/4" CONDUIT AND WALL MOUNT AS SHOWN ON PLANS. |
| | L | LITHONIA | ELT50-W-MT-H1212-N-AM-VM | 120 | EMERGENCY FIXTURE WITH WHITE FINISH, METAL LAMP HEADS, HALOGEN LAMPS, NICKEL-CADMIUM BATTERY, AMMETER AND VOLTMETER INCLUDED. |
| | M | KIM LIGHTING | AFL12-70PMH208 | 208 | FLOOD LIGHT |
| | N | HYDREL | 700-42-TRT-120-FL-GS | 120 | FLOOD LIGHTING FOR PEDISTAL BASE. THIS ITEM IS PART OF ALTERNATE BID ITEM. |

LIGHTING FIXTURE SCHEDULE NOTES:

1. LIGHT FIXTURES PROVIDED SHALL BE APPROVED EQUAL TO THE FIXTURE INDICATED IN THE SCHEDULE ABOVE.
2. FIXTURE MODEL NUMBERS ARE USED TO ESTABLISH MINIMUM QUALITY AND PERFORMANCE STANDARDS AND NOT TO ESTABLISH MOUNTING TYPE. MOUNTING REQUIREMENTS MAY VARY FOR THE SAME TYPE OF FIXTURE THROUGHOUT THE PROJECT. CONTRACTOR SHALL VERIFY INSTALLATION LOCATION AND PROVIDE APPROPRIATE MOUNTING HARDWARE FIXTURE TYPE DESIGN FOR EACH LOCATION.

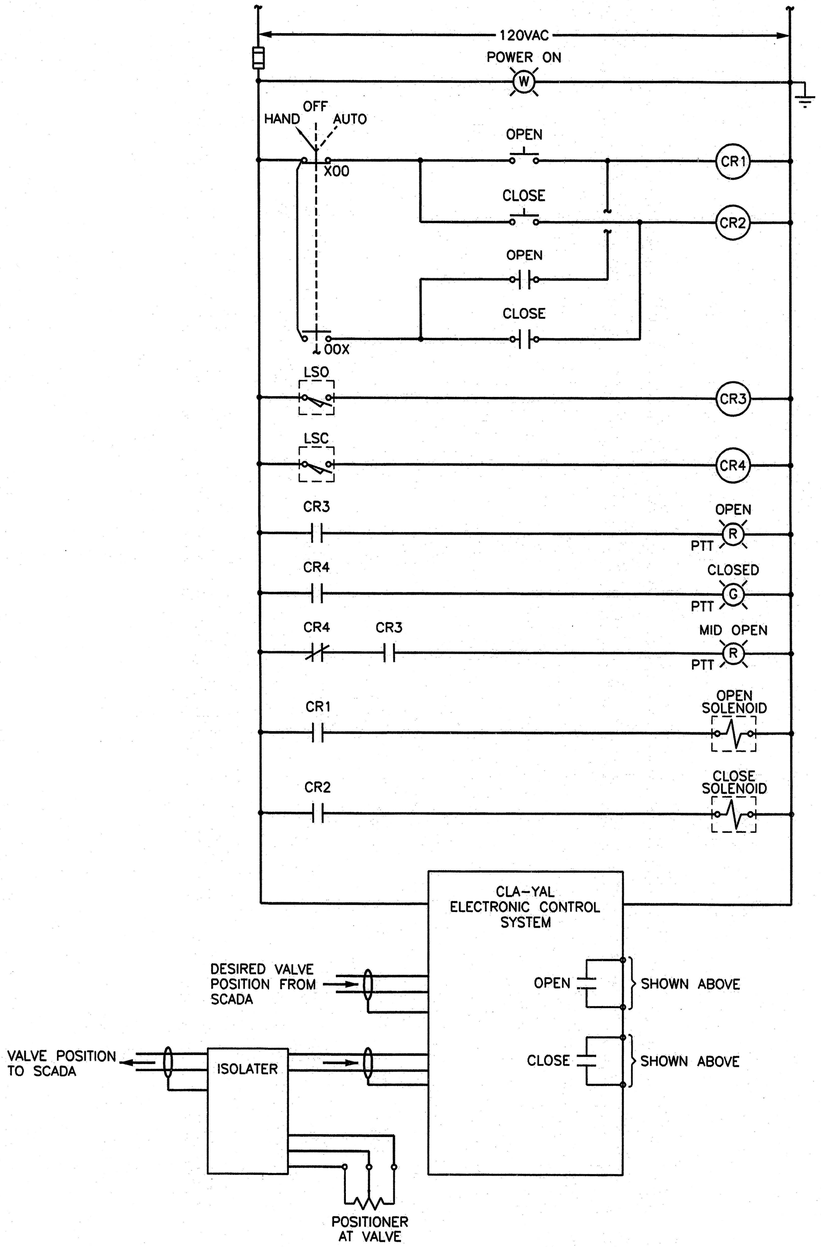


NO.3 GENERAL NOTES:

1. CONTRACTOR SHALL PROGRAM PLC TO OUTPUT A 4-20mA SIGNAL OF FULL OPEN/FULL CLOSE IN NORMAL OPERATION.
2. CONTRACTOR SHALL PROGRAM A SET POINT VALVE POSITION WHEN PUMPS FROM PUMP STATION ARE TURNED ON.
3. POWER FAILURE SHALL LEAVE THE VALVE IN THE FULL OPEN POSITION.
4. VALVE CONTROLS SHALL BE INSTALLED IN RTU. INDICATION LIGHTS, PUSH BUTTONS, AND SELECTOR SWITCHES SHALL BE MOUNTED TO RTU ENCLOSURE DOOR.

## 3 VALVE CONTROL SCHEMATIC

NOT TO SCALE

Freese and Nichols, Inc.
Texas Registered Engineering Firm F-2144
STATE OF TEXAS
JOHN W.P. MANNING
95784
LICENSED
PROFESSIONAL
ENGINEER
1/18/2011
FREESE NICHOLS
2220 Sam Hocho Blvd, Suite 330
Denton, Texas 76205-7580
Phone - (940) 387-4600
Fax - (940) 387-4677

TOWN OF ADDISON, TEXAS
SURVEYOR 1.5 MG EST
ELECTRICAL
SCHEMATICS, DIAGRAM & SCHEDULE

| F&N JOB NO. | ADD08459 |
|---|---|
| DATE | 01/18/11 |
| DESIGNED | JWM |
| DRAWN | JAF |
| REVISED | |
| CHECKED | JNH |
| FILE NAME | EL-ADD-SM-CTRL.dwg |

| NO. | ISSUE | BY | DATE |
|---|---|---|---|

VERIFY SCALE Bar is one inch on original drawing. If not one inch on this sheet, adjust scale.
0 1"

SHEET E-7
SEQ.

ACAD Rel 18.0s (LMS Tech)
User: ppm
[ADD08459][TDTNSRV2]
LAYOUT: EL-ADD-SM-CTRL
Jan 18, 2011 - 4:08pm
PSLTS: 1
TWIST: CLUALI.FREESE.COM
REFERENCES: N:\elec\Base\VWM-STAMP.dwg, N:\Standard\34BORDER.DWG, 95784.dwg

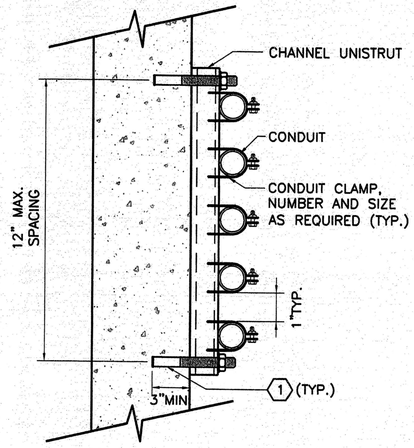


NO.1 NOTES BY SYMBOL "⬡"
1. ANCHORS SHALL BE EXPANDING 316 STAINLESS STEEL.

1 WALL MOUNTED CONDUIT RACK
NOT TO SCALE

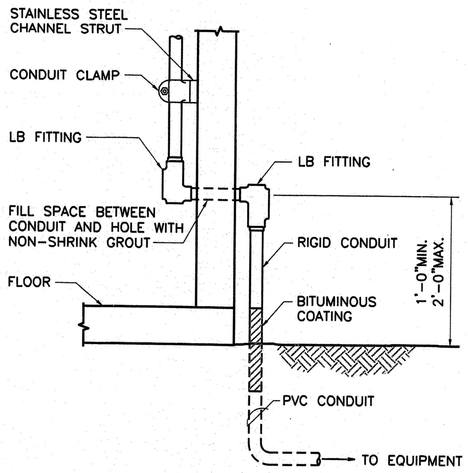


2 WALL PENETRATION
NOT TO SCALE

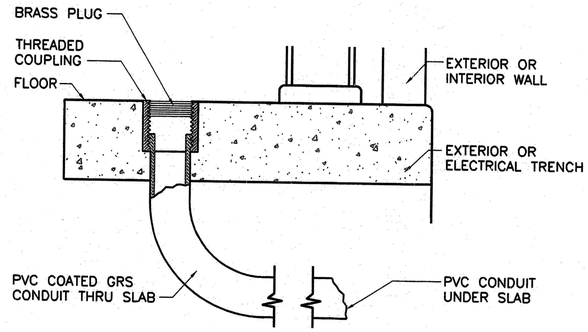


3 CONDUIT FLOOR ENTRANCE
NOT TO SCALE

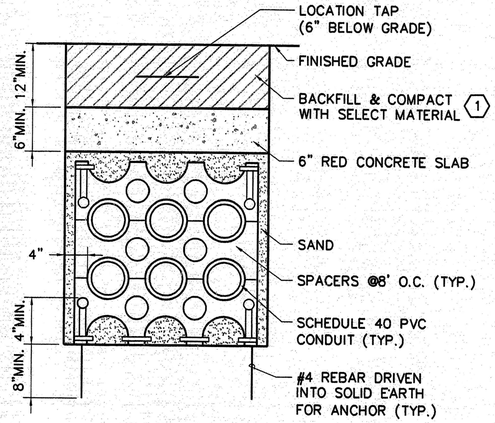


NO.4 NOTES BY SYMBOL "⬡"
1. SELECT BACKFILL TO BE CLASS 4 EARTH FILL. FILL SHALL CONSIST OF MATERIALS WHICH ARE CLASSIFIED AS SP, SM, SC, CL OR DUAL CLASSIFICATIONS THEREOF, WHICH HAVE A LIQUID LIMIT LESS THAN OR EQUAL TO 35 AND A PLASTICITY INDEX OF A MINIMUM OF 4 AND A MAXIMUM OF 15, WHICH ARE FREE OF ORGANIC MATERIALS.

4 CONCRETE CAPPED DUCT BANK DETAIL
NOT TO SCALE

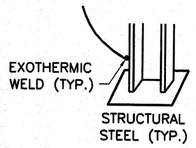


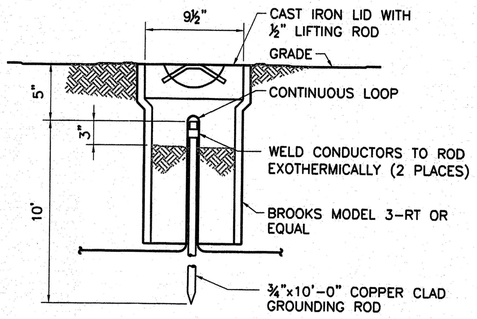


5 GROUND ROD DETAIL
NOT TO SCALE

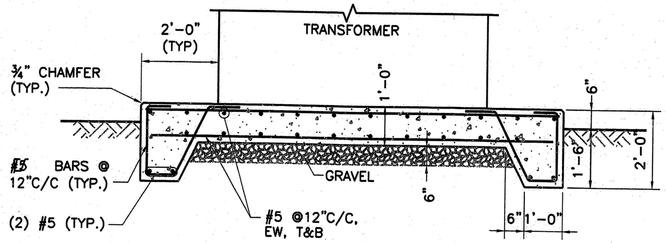


NO.7 GENERAL NOTES:
1. CONTRACTOR SHALL VERIFY TRANSFORMER.

7 TRANSFORMER PAD
NOT TO SCALE

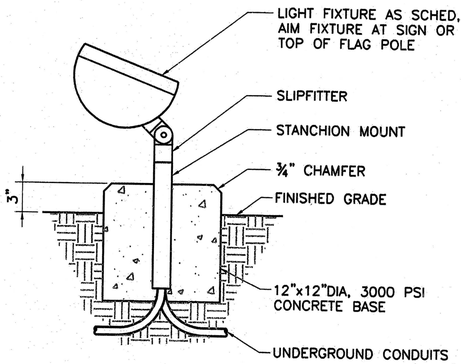


8 GROUND FLOOD LIGHT
NOT TO SCALE

Freese and Nichols, Inc.
Texas Registered Engineering Firm F-2144

STATE OF TEXAS
JOHN A. FRANCIS
95784
LICENSED
PROFESSIONAL ENGINEER

FREESE NICHOLS
2220 San Jacinto Blvd, Suite 330
Denton, Texas 76205-7589
Phone - (940) 387-4600
Fax - (940) 387-4677

TOWN OF ADDISON, TEXAS
SURVEYOR 1.5 MG EST
ELECTRICAL
DETAILS

| F&N JOB NO. | ADD08459 |
|---|---|
| DATE | 01/18/11 |
| DESIGNED | JWM |
| DRAWN | JAF |
| REVISED | |
| CHECKED | JNH |
| FILE NAME | EL-ADD-DT-MISC01.dwg |

| NO. | ISSUE | BY | DATE |
|---|---|---|---|

VERIFY SCALE Bar is one inch on original drawing. If not one inch on this sheet, adjust scale.
0 1"

SHEET
E-8
SEQ.

N:\elec\EL-ADD-DT-MISC01.dwg LAYOUT: EL-ADD-DT-MISC01
Jan 18, 2011 - 2:03pm PSLT: 1
REFERENCES: N:\elec\Base\WHM-STAMP.dwg N:\Standard\34800ROOF.DWG, 95784.dwg

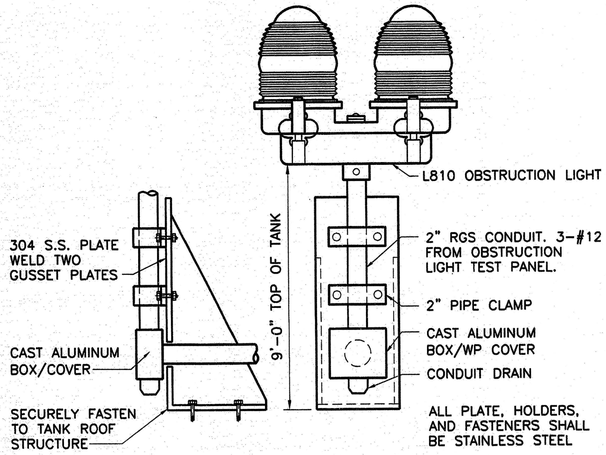


1 OBSTRUCTION LIGHT
NOT TO SCALE

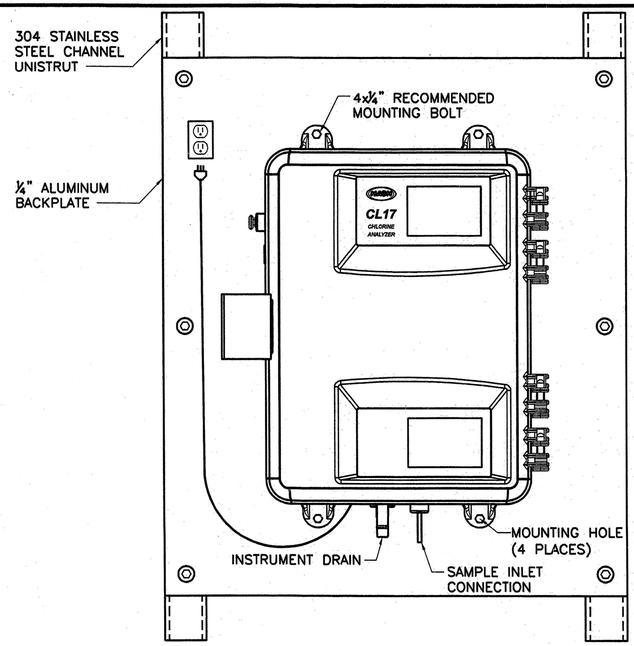


2 CHLORINE MONITOR MOUNTING DETAIL
NOT TO SCALE

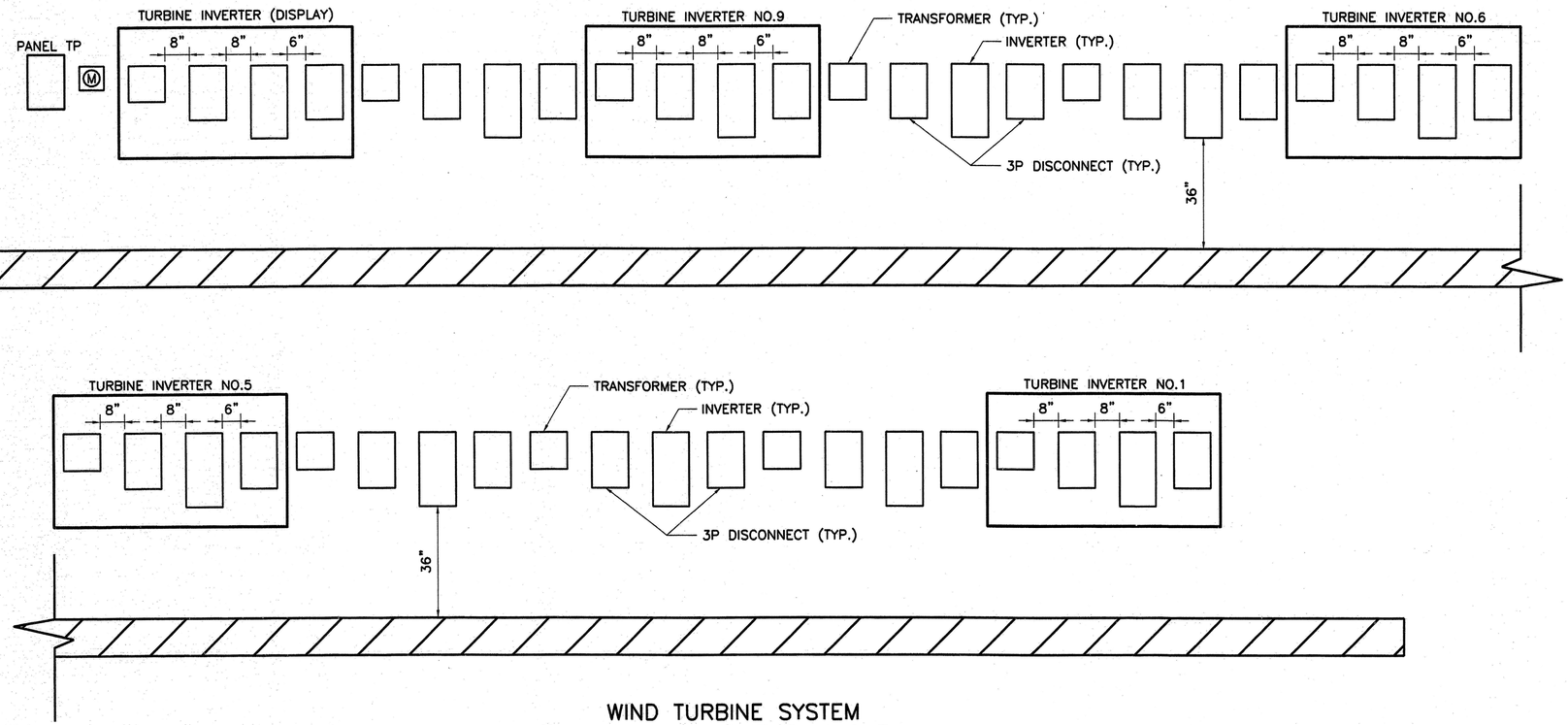


3 WIND TURBINE SYSTEM WALL EQUIPMENT LAYOUT
NOT TO SCALE

Freese and Nichols, Inc.
Texas Registered Engineering Firm F-2144

STATE OF TEXAS
JOHN W.P. MANNING
95784
LICENSED PROFESSIONAL ENGINEER
1/18/2011

FREESE NICHOLS
2220 San Jacinto Blvd., Suite 330
Denton, Texas 76205-7589
Phone - (940) 387-4600
Fax - (940) 387-4677

TOWN OF ADDISON, TEXAS
SURVEYOR 1.5 MG EST
ELECTRICAL
DETAILS

| | |
|---|---|
| F&N JOB NO. | ADD08459 |
| DATE | 01/18/11 |
| DESIGNED | JWM |
| DRAWN | JAF |
| REVISED | . |
| CHECKED | JNH |
| FILE NAME | EL-ADD-DT-MISC02.dwg |

| NO. | ISSUE | BY | DATE |
|---|---|---|---|
| | | | |

VERIFY SCALE Bar is one inch on original drawing. If not one inch on this sheet, adjust scale.
0 1"

SHEET E-9
SEQ.

ACAD Rel 18.0s (LMS Tech) User: jwm
[ADD08459DTMISC02.dwg] LAYOUT: EL-ADD-DT-MISC02
Jan 18, 2011 - 6:35pm LTS: 1 PSLTS: 1 TWIST: CLUALLFREESE.COM
REFERENCES: N:\elec\Base\JWM-STAMP.dwg N:\Standard\34BORDER.DWG N:\IF\Base\cv-util-pl-inverter.dwg 95784.dwg