CONSTRUCTION PLANS
FOR
VILLAGE ON THE PARKWAY
TOWN OF ADDISON, DALLAS COUNTY, TEXAS

CONSTRUCTION PLANS VILLAGE ON THE PARKWAY
TOWN OF ADDISON PROJECT NUMBER: 2012-02

VICINITY MAP
(NOT TO SCALE)

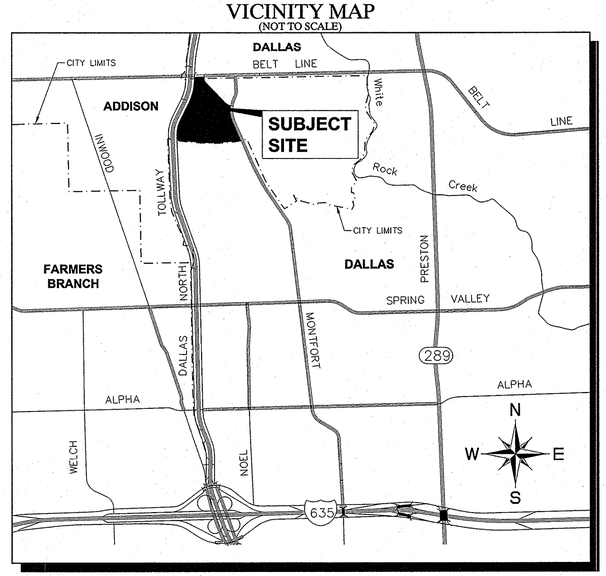

INDEX OF SHEETS

SHEET #	SHEET TITLE	DATE	REVISION
C-01	COVER SHEET	11/19/2012	1 2
1 of 2	AMENDED REPLAT	05/2012	
2 of 2	AMENDED REPLAT	05/2012	
C-02	GENERAL NOTES	9/27/12	
C-03	EROSION CONTROL PLAN	9/27/12	
C-04	EROSION CONTROL DETAILS	9/27/12	
C-05	DEMOLITION PLAN	9/27/12	
C-06	GRADING PLAN	10/05/2012	1
C-07	DETAILED GRADING PLAN	9/27/12	
C-08	PAVING & DIMENSION CONTROL PLAN	9/27/12	
C-09	EXISTING CONDITIONS DRAINAGE AREA MAP	9/27/12	
C-10	DRAINAGE AREA MAP	9/27/12	
C-11	STORM SEWER PLAN	11/19/12	2
C-12	STORM SEWER PROFILES	11/19/12	2
C-13	UTILITY PLAN	9/27/12	
C-14	SANITARY SEWER PROFILE	9/27/12	
C-15	DALLAS PARKWAY TRAFFIC CONTROL PLAN	9/27/12	
C-16	ON-SITE TRAFFIC CONTROL PLAN	9/27/12	
C-17	TOWN OF ADDISON STORM DRAINAGE DETAILS	08/2010	
C-18	TOWN OF ADDISON PAVING DETAILS	08/2010	
C-19	TOWN OF ADDISON WASTEWATER DETAILS	08/2010	
C-20	TOWN OF ADDISON WATER DETAILS	08/2010	
C-21	PHASING PLAN	9/27/12	
L1.00	EXISTING TREE PLAN	09/21/2012	
L1.01	LANDSCAPE PLAN	09/21/2012	
L1.02	HARDSCAPE PLAN	05/25/2012	
L1.03	LANDSCAPE SPECIFICATIONS	05/25/2012	
L2.01	IRRIGATION PLAN	09/21/2012	
L2.02	IRRIGATION SPECIFICATIONS	05/25/2012	

BENCHMARKS

BM 1 2" BRASS DISK STAMPED "TXDOT COA-5 GPS" 190'± SOUTH FROM THE INTERSECTION OF EDWIN LEWIS DRIVE AND QUORUM DRIVE; 2'± FROM WEST EDGE OF SIDEWALK, 50.5'± FROM THE WEST SIDE OF MEDIAN IN QUORUM DRIVE & 76'± FROM FIRE HYDRANT.

ELEV=630.10

BM 2 2" BRASS DISK STAMPED "TXDOT COA-10 GPS" AT THE NORTHWEST CORNER OF HAVENSHIRE PLACE AND BELLBROOK DRIVE; 21.80± FROM SANITARY SEWER MANHOLE, 11.10'± FROM STREET SIGN & 2.45± TO PC IN SIDEWALK.

ELEV=593.69

BM 3 CITY OF DALLAS WATER DEPT. BENCHMARK; "□" ON CONCRETE BASE OF 6' BRICK WALL AT THE NORTHEAST CORNER OF CELESTIAL ROAD AND MONTFORT DRIVE.

ELEV=626.81

BM 4 STANDARD CITY OF DALLAS WATER DEPT. BENCHMARK ON CONCRETE CURB ON STORM SEWER INLET AT THE NORTHEAST CORNER OF HUGHES LANE AND PRESTON ROAD; 30'± NORTH OF HUGHES LANE.

ELEV=573.18

BM 5 "⊠" SET ON NORTHWEST CORNER OF CONCRETE PAD FOR SWB TELEPHONE BOX, 15'± EAST OF NORTHBOUND DALLAS NORTH TOLLWAY ACCESS ROAD AND 1,450'± SOUTH OF BELT LINE ROAD.

ELEV=634.30

BM 6 "⊠" SET ON SOUTHEAST CORNER OF CURB INLET; 15'± WEST OF MONTFORT DRIVE AND 750'± SOUTH OF SAKOWITZ DRIVE.

ELEV=603.67

BM 7 "⊠" SET ON SOUTHWEST CORNER OF CURB INLET ON SOUTH SIDE OF BELT LINE ROAD AND 200'± EAST OF DALLAS NORTH TOLLWAY.

ELEV=627.26

BM 8 "⊠" SET ON NORTHEAST CORNER OF "Y" INLET 20'± SOUTH OF SAKOWITZ DRIVE AND 315'± NORTHWEST OF MONTFORT DRIVE.

ELEV=616.09

BM 9 "⊠" SET ON SOUTHEAST CORNER OF CURB INLET ON EAST SIDE OF DALLAS NORTH TOLLWAY ACCESS ROAD AND 300'± SOUTH OF BELT LINE ROAD.

ELEV=627.34

OWNER / DEVELOPER
VOP, LP
2000 McKINNEY AVENUE
SUITE 1000
DALLAS, TX 75201
CONTACT: JARROD YATES

ARCHITECT
GOOD FULTON & FARRELL ARCHITECTS
2808 FAIRMOUNT STREET
SUITE 300
DALLAS, TX 75201
PH. (214) 303-1500
CONTACT: MATTHEW BALSMAN

ENGINEER
Kimley-Horn and Associates, Inc.
5750 GENESIS COURT
FRISCO, TEXAS 75034
PH. (972) 335-3580
CONTACT: TREY BRASWELL, P.E.
FIRM NO. F-928

SURVEYOR
Kimley-Horn and Associates, Inc.
12750 MERIT DRIVE
DALLAS, TEXAS 75251
SUITE 1000
PH. (972) 770-1300
CONTACT: DANA BROWN, R.P.L.S.
FIRM NO. F-928

STOP!
CALL BEFORE YOU DIG
DIG TESS
1-800-DIG-TESS
(at least 72 hours prior to digging)

RECORD DRAWINGS
(October 2013)
Information Provided By:
BOB MOORE CONSTRUCTION

STATE OF TEXAS
ROY BRASWELL
104908
LICENSED
PROFESSIONAL ENGINEER
11/19/2012

TOWN OF ADDISON PROJECT #: 2012-02
SEPTEMBER 27, 2012

PLOTTED BY BRASWELL, TREY 11/19/2012 1:49 PM
DWG NAME K:\FRI_CIVIL\131193-VOP\DWG\PLAN SET\C-01-COVER.DWG [C-01 COVER SHEET]
LAST SAVED 10/5/2012 9:05 AM
This document, together with the concepts and designs presented herein, as an instrument of service, is intended only for the specific purpose and client for which it was prepared. Reuse of and improper reliance on this document without written authorization and adaptation by Kimley-Horn and Associates, Inc. shall be without liability to Kimley-Horn and Associates, Inc.

GENERAL NOTES:

1. ALL CONSTRUCTION WITHIN THE ADDISON TOWN LIMITS SHALL BE IN ACCORDANCE WITH THESE PLANS AND THE TOWN OF ADDISON DEVELOPMENT SERVICES' "STANDARD CONSTRUCTION DETAILS". TOWN OF ADDISON STANDARDS GOVERN OVER NCTCOG IN THE EVENT OF A CONFLICT. ALL CONSTRUCTION WITHIN THE DALLAS CITY LIMITS SHALL BE IN ACCORDANCE WITH CITY OF DALLAS CONSTRUCTION STANDARDS AS SPECIFIED IN FILE 251D-1.

2. THE CONTRACTOR IS RESPONSIBLE FOR OBTAINING ALL NECESSARY PERMITS AND APPROVALS.

3. THE CONTRACTOR SHALL BE RESPONSIBLE FOR REMOVAL AND DISPOSAL OFFSITE OF ANY EXISTING PAVING AND STRUCTURES REMOVED.

4. BEFORE STARTING CONSTRUCTION, CONTRACTOR SHALL FIELD VERIFY THE HORIZONTAL AND VERTICAL LOCATION OF ALL EXISTING UTILITIES WHERE PROPOSED UTILITIES ARE BEING CONNECTED. THE LOCATION OF ALL UTILITIES SHOWN ON THESE PLANS WAS TAKEN FROM EXISTING PUBLIC RECORDS. THE EXACT LOCATION AND ELEVATION OF ALL PUBLIC UTILITIES MUST BE DETERMINED BY CONTRACTOR. IT SHALL BE THE DUTY AND RESPONSIBILITY OF THE CONTRACTOR TO ASCERTAIN WHETHER ANY ADDITIONAL FACILITIES OTHER THAN THOSE SHOWN ON THE PLANS MAY BE PRESENT. CONTRACTOR SHALL NOTIFY THE ENGINEER IMMEDIATELY IF A DISCREPANCY AND/OR CONFLICT IS DISCOVERED. CONTRACTOR WILL BE RESPONSIBLE FOR ANY DAMAGE CAUSED TO EXISTING UTILITIES DURING CONSTRUCTION.

5. IT IS THE CONTRACTOR'S RESPONSIBILITY TO MAINTAIN NEAT AND ACCURATE CONSTRUCTION RECORD PLANS.

6. CONTRACTOR SHALL BE RESPONSIBLE FOR ALL CONSTRUCTION SURVEYING. WRITTEN APPROVAL WILL BE REQUIRED FROM THE TOWN FOR ANY CHANGES TO PLANS PRIOR TO CONSTRUCTION.

7. WATER AND SEWER SERVICES SHALL BE CONSTRUCTED IN ACCORDANCE WITH THE TOWN OF ADDISON, TEXAS STANDARDS AND SPECIFICATIONS.

8. ALL EXISTING TRAFFIC AND STREET SIGNS DISTURBED SHALL BE REINSTALLED WHERE APPLICABLE BY THE CONTRACTOR.

9. CONTRACTOR SHALL BE RESPONSIBLE FOR LOCATING ALL EXISTING STRUCTURES, UTILITIES, AND SERVICES PRIOR TO EXCAVATION AND CONSTRUCTION.

10. CONTRACTOR SHALL BE RESPONSIBLE FOR COORDINATING WITH UTILITY COMPANIES FOR THE RELOCATION OF ANY EXISTING UTILITIES.

11. CONTRACTOR SHALL USE ALL NECESSARY PRECAUTIONS TO AVOID CONTACT WITH OVERHEAD AND UNDERGROUND POWER LINES.

12. THE CONTRACTOR SHALL REVIEW AND VERIFY ALL DIMENSIONS SHOWN ON THE PLANS AND REVIEW ALL FIELD CONDITIONS, INCLUDING EXISTING GRADES AND UTILITY FLOW LINES, AND SHOULD DISCREPANCIES OCCUR. THE CONTRACTOR SHALL NOTIFY THE ENGINEER TO OBTAIN THE ENGINEER'S CLARIFICATION BEFORE COMMENCING WITH CONSTRUCTION.

13. THE CONTRACTOR SHALL PROTECT ALL EXISTING STRUCTURES, UTILITIES, AND OTHER FACILITIES TO REMAIN AND SHALL REPAIR ANY DAMAGES DUE TO HIS CONSTRUCTION ACTIVITIES AT NO COST TO THE OWNER.

14. ALL EXISTING SHRUBS, TREES, PLANTING, AND OTHER VEGETATION, OUTSIDE OF PROPERTY LIMITS DISTURBED DURING CONSTRUCTION SHALL BE REPLACED WITH EQUIVALENT MATERIAL BY THE CONTRACTOR AT NO ADDITIONAL COST TO THE OWNER.

15. THE CONTRACTOR SHALL CONSTRUCT SILT SCREENS OR OTHER APPROVED DEVICES PRIOR TO CONSTRUCTION TO PREVENT ADVERSE OFF SITE IMPACT OF STORM WATER QUALITY, AS REQUIRED BY THE TOWN OF ADDISON, TEXAS. CONTRACTOR IS RESPONSIBLE FOR PROPER MAINTENANCE OF THE REQUIRED EROSION CONTROL DEVICES THROUGHOUT THE ENTIRE CONSTRUCTION PROCESS. THE EROSION CONTROL DEVICES SHOULD REMAIN IN PLACE, WHERE PRACTICAL, UPON COMPLETION OF CONSTRUCTION.

16. CONTRACTOR IS RESPONSIBLE FOR REMOVING ALL SILT AND DEBRIS OFFSITE FROM THE EXISTING ROADWAYS AND PROJECT SITE THAT ARE A RESULT OF THE PROPOSED CONSTRUCTION AS REQUESTED BY THE TOWN OF ADDISON, TEXAS. AS A MINIMUM, THIS TASK SHOULD OCCUR ONCE A WEEK.

17. CONNECTIONS TO EXISTING FACILITIES SHALL BE ACCOMPLISHED IN A NEAT AND PROFESSIONAL MANNER. WHEN FIELD CONDITIONS INDICATE ANY VARIANCE FROM DETAILED METHODS. THE CONTRACTOR SHALL PROVIDE COMPREHENSIVE AND DETAILED DRAWINGS (FOR APPROVAL) OF METHODS PROPOSED.

18. WATER SHALL NOT BE PERMITTED IN OPEN TRENCHES DURING CONSTRUCTION.

19. CONTRACTOR SHALL CONTACT THE TOWN ENGINEERING DEPARTMENT'S INSPECTOR ASSIGNED TO THIS PROJECT AT LEAST 48 HOURS PRIOR TO STARTING CONSTRUCTION.

20. CONTRACTOR IS RESPONSIBLE FOR GRASSING DISTURBED AREAS FROM BACK OF CURB TO THE RIGHT-OF-WAY AND AREAS OTHERWISE SPECIFIED ON THE PLANS.

21. ALL STORM DRAIN PIPE SHALL BE CLASS III RCP WITH A MIN. ALLOWABLE STRENGTH OF 4,200 PSI.

22. ALL PRIVATE LANDSCAPE AREA DRAINS SHALL BE OF MATERIAL APPROVED BY BOTH ENGINEER AND TOWN OF ADDISON, TEXAS.

23. CONTRACTOR IS TO CONSTRUCT A STABILIZED CONSTRUCTION EXIT AT ALL PRIMARY POINTS OF ACCESS. THIS STABILIZED EXIT SHALL BE CONSTRUCTED PER TOWN DETAILS.

24. ANY WATER OR SANITARY SEWER SERVICE LOCATED OUTSIDE OF A STREET, ALLEY, OR EASEMENT SHALL BE INSTALLED BY A PLUMBER AND BE INSPECTED BY CODE ENFORCEMENT.

25. THE CONTRACTOR SHALL BE RESPONSIBLE FOR SUBMITTING A TRENCH SAFETY PLAN TO THE TOWN OF ADDISON, TEXAS PUBLIC WORKS DEPARTMENT AT THE TIME OF THE PRECONSTRUCTION MEETING, OR PRIOR TO BEGINNING CONSTRUCTION OF THESE IMPROVEMENTS. CONTRACTOR SHALL BE RESPONSIBLE FOR MAINTAINING TRENCH SAFETY REQUIREMENTS IN ACCORDANCE WITH TOWN STANDARDS, TEXAS STATE LAW, AND O.S.H.A. STANDARDS FOR ALL EXCAVATION IN EXCESS OF FIVE FEET IN DEPTH. NO OPEN TRENCHES WILL BE ALLOWED OVERNIGHT WITHOUT THE PRIOR SPECIFIC WRITTEN APPROVAL OF THE TOWN OF ADDISON, TEXAS PUBLIC WORKS DEPARTMENT. ONSITE SAFETY IS THE SOLE RESPONSIBILITY OF THE CONTRACTOR.

26. DURING CONSTRUCTION, ALL MATERIAL TESTING SHALL BE COORDINATED WITH THE TOWN OF ADDISON CONSTRUCTION INSPECTOR.

27. CONTRACTOR SHALL CONTACT THE TOWN BUILDING OFFICIAL TO LEARN OF ANY UNUSUAL CONSTRUCTION SEQUENCING REQUIREMENTS THE TOWN MAY REQUIRE.

28. THE CONTRACTOR WILL BE RESPONSIBLE FOR COMPLYING WITH TOWN SPECIFICATIONS FOR PAVING CONSTRUCTION, COMPACTION REQUIREMENTS, AND SUBGRADE PREPARATION.

29. CONTRACTOR TO REVIEW DESIGN INTENT OF THESE PLANS AND SUBMIT REQUESTS-FOR-INFORMATION IN A TIMELY MANNER PRIOR TO COMMENCING THAT WORK.

30. REFER TO M.E.P. AND IRRIGATION PLANS FOR SLEEVING REQUIREMENTS. CONTRACTOR SHALL COORDINATE WITH FRANCHISE UTILITY COMPANIES FOR SLEEVING REQUIREMENTS PRIOR TO ANY PAVING ACTIVITIES.

31. ALL APPURTENANCES INSTALLED IN PAVEMENT AREAS SHALL BE ADJUSTED AS REQUIRED TO BE FLUSH WITH FINISHED PAVEMENT.

32. THE SCOPE OF WORK OF THIS PROJECT IS TO BE WITHIN 5' OF BUILDING EXCEPT AS NOTED IN THE GRADING NOTES.

33. THE CONTRACTOR WILL BE SOLELY RESPONSIBLE FOR IMPLEMENTING THE TRAFFIC CONTROL PLAN.

STORM DRAINAGE

1. ALL CONSTRUCTION TO BE IN ACCORDANCE WITH THESE PLANS AND THE TOWN OF ADDISON DEVELOPMENT SERVICES' "STANDARD CONSTRUCTION DETAILS". TOWN OF ADDISON STANDARDS GOVERN OVER NCTCOG IN THE EVENT OF A CONFLICT.

2. THE CONTRACTOR SHALL FIELD VERIFY THE HORIZONTAL AND VERTICAL LOCATIONS OF ALL EXISTING UTILITIES PRIOR TO START OF CONSTRUCTION AND SHALL NOTIFY THE CONSTRUCTION MANAGER AND ENGINEER OF ANY CONFLICTS DISCOVERED. CONTRACTOR IS RESPONSIBLE FOR PROTECTING EXISTING UTILITIES (SHOWN OR NOT SHOWN) WITHIN SCOPE OF CONSTRUCTION. IF ANY EXISTING UTILITIES ARE DAMAGED, THE CONTRACTOR SHALL REPLACE THEM AT HIS OWN EXPENSE.

3. THE CONTRACTOR SHALL MAINTAIN ADEQUATE SITE DRAINAGE DURING ALL PHASES OF CONSTRUCTION. THE CONTRACTOR SHALL USE SILT FENCES (OR OTHER METHODS APPROVED BY THE ENGINEER AND TOWN) AS REQUIRED TO PREVENT SILT AND CONSTRUCTION DEBRIS FROM FLOWING ONTO ADJACENT PROPERTIES. CONTRACTOR SHALL COMPLY WITH ALL APPLICABLE FEDERAL, STATE, OR LOCAL EROSION, CONSERVATION, AND SILTATION REQUIREMENTS. CONTRACTOR SHALL REMOVE ALL TEMPORARY EROSION CONTROL DEVICES UPON COMPLETION OF PERMANENT DRAINAGE FACILITIES AND THE ESTABLISHMENT OF A STAND OF GRASS OR OTHER GROWTH TO PREVENT EROSION.

4. THE CONTRACTOR SHALL SALVAGE AND PROTECT ALL EXISTING POWER POLES, SIGNS, MANHOLES, TELEPHONE RISERS, WATER VALVES, ETC. DURING ALL CONSTRUCTION PHASES.

5. THE CONTRACTOR SHALL BE SOLELY RESPONSIBLE FOR SITE TRENCH SAFETY DURING ALL PHASES OF CONSTRUCTION. THE CONTRACTOR SHALL SUBMIT A TRENCH EXCAVATION PROTECTION PLAN, SEALED BY AN ENGINEER REGISTERED IN THE STATE OF TEXAS, FOR ALL TRENCHES DEEPER THAN FIVE (5) FEET.

6. THE CONTRACTOR SHALL VERIFY AND COORDINATE ALL DIMENSIONS SHOWN, INCLUDING THE HORIZONTAL AND VERTICAL LOCATION OF CURB INLETS AND GRATE INLETS AND ALL UTILITIES CROSSING THE STORM SEWER.

STORM DRAINAGE (CONTINUED)

7. THE SITE UTILITY CONTRACTOR SHALL PROVIDE ALL MATERIALS AND APPURTENANCES NECESSARY FOR COMPLETE INSTALLATION OF THE STORM SEWER.

8. THE INSPECTOR SHALL INSPECT ALL "PUBLIC" CONSTRUCTION. THE CONTRACTOR'S BID PRICE SHALL INCLUDE ALL INSPECTION FEES.

9. CONTRACTOR IS RESPONSIBLE FOR OBTAINING ALL REQUIRED PERMITS AND APPROVALS PRIOR TO COMMENCING CONSTRUCTION.

10. ALL PVC TO RCP CONNECTIONS SHALL BE CONSTRUCTED WITH CONCRETE COLLARS.

11. ALL OFFSITE STORM SEWER LINES SHALL BE MINIMUM CLASS III RCP. ONSITE STORM SEWER LINES 18" AND GREATER MAY BE CLASS III RCP. ALL PRIVATE STORM SHALL BE NOTED AS ON PLANS. CONTRACTOR TO CONTACT ENGINEER WITH QUESTIONS ABOUT PIPE MATERIAL PRIOR TO ORDERING. IF USING HDPE, CONTRACTOR SHALL SUBMIT TECHNICAL DATA TO PROJECT ENGINEER AND TOWN ENGINEER FOR APPROVAL PRIOR TO ORDERING MATERIAL.

12. ALL MATERIALS AND WORKMANSHIP SHALL CONFORM TO THE STANDARD SPECIFICATIONS FOR PUBLIC WORKS CONSTRUCTION FOR NORTH CENTRAL TEXAS, LATEST EDITION. AND ANY SPECIAL PROVISION AS APPROVED BY THE TOWN OF ADDISON, TEXAS.

13. THE CONTRACTOR SHALL PROVIDE CONSTRUCTION STAKING FOR ALL STORM SEWER LINES AND OTHER UTILITIES.

14. EMBEDMENT FOR ALL ONSITE SEWER LINES, PUBLIC OR PRIVATE. SHALL BE PER TOWN OF ADDISON, TEXAS STANDARD DETAILS.

15. REFER TO TNRCC/TCEQ DESIGN GUIDELINES (CHAPTER 290) FOR ALL UTILITY CROSSINGS.

GRADING

1. ALL CONSTRUCTION TO BE IN ACCORDANCE WITH THESE PLANS AND THE TOWN OF ADDISON DEVELOPMENT SERVICES' "STANDARD CONSTRUCTION DETAILS" AND THE FINAL GEOTECHNICAL REPORT. TOWN OF ADDISON STANDARDS GOVERN OVER NCTCOG IN THE EVENT OF A CONFLICT.

2. UNLESS OTHERWISE NOTED, PROPOSED CONTOURS AND SPOT ELEVATIONS SHOWN IN PAVED AREAS REFLECT TOP OF PAVEMENT SURFACE. ADD .50' TO PAVING GRADE FOR TOP OF CURB GRADE. THE LIMITS OF EARTHWORK IN PAVED AREAS IS THE BOTTOM OF PAVEMENT.

3. THE CONTRACTOR SHALL FIELD VERIFY THE HORIZONTAL AND VERTICAL LOCATIONS OF ALL EXISTING UTILITIES PRIOR TO START OF CONSTRUCTION AND SHALL NOTIFY THE CONSTRUCTION MANAGER AND ENGINEER OF ANY CONFLICTS DISCOVERED. CONTRACTOR IS RESPONSIBLE FOR PROTECTING EXISTING UTILITIES (SHOWN OR NOT SHOWN) WITHIN SCOPE OF CONSTRUCTION. IF ANY EXISTING UTILITIES ARE DAMAGED, THE CONTRACTOR SHALL REPLACE THEM AT HIS OWN EXPENSE.

4. THE CONTRACTOR SHALL MAINTAIN ADEQUATE SITE DRAINAGE DURING ALL PHASES OF CONSTRUCTION. THE CONTRACTOR SHALL USE SILT FENCES (OR OTHER METHODS APPROVED BY THE ENGINEER AND TOWN) AS REQUIRED TO PREVENT SILT AND CONSTRUCTION DEBRIS FROM FLOWING ONTO ADJACENT PROPERTIES. CONTRACTOR SHALL COMPLY WITH ALL APPLICABLE FEDERAL, STATE, OR LOCAL EROSION, CONSERVATION, AND SILTATION REQUIREMENTS. CONTRACTOR SHALL REMOVE ALL TEMPORARY EROSION CONTROL DEVICES UPON COMPLETION OF PERMANENT DRAINAGE FACILITIES AND THE ESTABLISHMENT OF A STAND OF GRASS OR OTHER GROWTH TO PREVENT EROSION. CONTRACTOR IS RESPONSIBLE FOR FILING N.O.I. AND N.O.T. WITH THE TNRCC. CONTRACTOR SOLELY RESPONSIBLE FOR ALL MANDATED SWPPP RECORD KEEPING AND REPORTING.

5. SEE STRUCTURAL SPECIFICATIONS FOR BUILDING PAD DETAILS. THE CONTRACTOR SHALL TAKE ALL AVAILABLE PRECAUTIONS TO CONTROL DUST. CONTRACTOR SHALL CONTROL DUST BY SPRINKLING WATER, OR BY OTHER MEANS APPROVED BY THE TOWN AND ENGINEER, AT NO ADDITIONAL COST TO THE OWNER.

6. ALL EXCAVATING IS UNCLASSIFIED AND SHALL INCLUDE ALL MATERIALS ENCOUNTERED. UNUSABLE EXCAVATED MATERIAL AND ALL WASTE RESULTING FROM SITE CLEARING AND GRUBBING SHALL BE DISPOSED OF OFF SITE BY THE GRADING CONTRACTOR AT HIS EXPENSE.

7. BEFORE ANY EARTHWORK IS PERFORMED, THE CONTRACTOR SHALL STAKE OUT AND MARK THE LIMITS OF PAVEMENT AND OTHER ITEMS ESTABLISHED BY THE PLANS. THE CONTRACTOR SHALL PROVIDE ALL NECESSARY ENGINEERING AND SURVEYING FOR LINE AND GRADE CONTROL POINTS RELATED TO EARTHWORK.

8. THE CONTRACTOR SHALL SALVAGE AND PROTECT ALL EXISTING POWER POLES, SIGNS, MANHOLES, TELEPHONE RISERS, WATER VALVES, ETC. THAT ARE TO REMAIN OR BE RELOCATED DURING ALL CONSTRUCTION PHASES.

9. REFERENCE STRUCTURAL DRAWINGS AND SPECIFICATIONS AND GEOTECHNICAL REPORT FOR BUILDING PAD AND PAVING SUBGRADE INFORMATION.

10. THE CONTRACTOR SHALL CLEAR AND GRUB THE SITE AND PLACE, COMPACT, AND MOISTURE CONDITION ALL FILL PER THE PROJECT GEOTECHNICAL ENGINEER'S SPECIFICATIONS. THE FILL MATERIAL TO BE USED SHALL BE APPROVED BY THE GEOTECHNICAL ENGINEER PRIOR TO PLACEMENT.

11. GRADING CONTRACTOR SHALL COORDINATE WITH THE UTILITY COMPANIES FOR ANY REQUIRED UTILITY ADJUSTMENTS AND/OR RELOCATIONS.

12. TESTING OF MATERIALS REQUIRED FOR THE CONSTRUCTION OF THE PAVING IMPROVEMENTS SHALL BE PERFORMED BY AN APPROVED AGENCY FOR TESTING MATERIALS. THE NOMINATION OF THE TESTING LABORATORY AND THE PAYMENTS FOR SUCH TESTING SERVICES SHALL BE MADE BY THE CONTRACTOR. THE OWNER SHALL APPROVE THE LABORATORY NOMINATED TO DO THE TESTING OF MATERIALS. IT SHALL BE THE CONTRACTOR'S RESPONSIBILITY TO SHOW BY STANDARD TESTING PROCEDURES THAT THE WORK CONSTRUCTED DOES MEET THE REQUIREMENTS OF THE TOWN'S SPECIFICATIONS AND THESE PLANS.

13. CONTRACTOR SHALL CALL 1-800-DIG-TESS AT LEAST 72 HOURS PRIOR TO COMMENCING CONSTRUCTION FOR FIELD LOCATIONS OF UTILITIES IN THE VICINITY OF THE SITE.

14. PROPOSED CONTOURS ARE APPROXIMATE. PROPOSED SPOT ELEVATIONS AND DESIGNATED GRADIENT ARE TO BE USED IN CASE OF DISCREPANCY.

15. REFER TO SITE PLAN AND FINAL PLAT FOR HORIZONTAL DIMENSIONS.

16. CONTRACTOR IS RESPONSIBLE FOR OBTAINING ALL PERMITS AND APPROVALS PRIOR TO CONSTRUCTION.

17. REFER TO EROSION CONTROL PLAN FOR EROSION CONTROL DEVICES TO BE INSTALLED PRIOR TO COMMENCING CONSTRUCTION.

18. NO TREE SHALL BE REMOVED OR DAMAGED WITHOUT PRIOR AUTHORIZATION OF THE OWNER OR OWNER'S REPRESENTATIVE. EXISTING TREES SHALL BE PRESERVED WHENEVER POSSIBLE.

19. CONTRACTOR SHALL VERIFY HORIZONTAL AND VERTICAL CONTROL PRIOR TO COMMENCING CONSTRUCTION AND SHALL NOTIFY ENGINEER OF ANY DISCREPANCIES BEFORE CONSTRUCTION COMMENCES.

20. AFTER PLACEMENT OF SUBGRADE AND PRIOR TO PLACEMENT OF PAVEMENT, CONTRACTOR SHALL TEST AND OBSERVE PAVEMENT AREAS FOR EVIDENCE OF PONDING. ALL AREAS SHALL ADEQUATELY DRAIN TOWARDS THE INTENDED STRUCTURE TO CONVEY STORM RUNOFF. CONTRACTOR SHALL IMMEDIATELY NOTIFY OWNER AND ENGINEER IF ANY DISCREPANCIES ARE DISCOVERED.

PAVING

1. ALL CONSTRUCTION WITHIN THE ADDISON TOWN LIMITS SHALL BE IN ACCORDANCE WITH THESE PLANS AND THE TOWN OF ADDISON DEVELOPMENT SERVICES' "STANDARD CONSTRUCTION DETAILS". TOWN OF ADDISON STANDARDS GOVERN OVER NCTCOG IN THE EVENT OF A CONFLICT. ALL CONSTRUCTION WITHIN THE DALLAS CITY LIMITS SHALL BE IN ACCORDANCE WITH CITY OF DALLAS CONSTRUCTION STANDARDS AS SPECIFIED IN FILE 251D-1.

2. THE CONTRACTOR SHALL FIELD VERIFY THE HORIZONTAL AND VERTICAL LOCATIONS OF ALL EXISTING UTILITIES PRIOR TO START OF CONSTRUCTION AND SHALL NOTIFY THE CONSTRUCTION MANAGER AND ENGINEER OF ANY CONFLICTS DISCOVERED. CONTRACTOR IS RESPONSIBLE FOR PROTECTING EXISTING UTILITIES (SHOWN OR NOT SHOWN) WITHIN SCOPE OF CONSTRUCTION. IF ANY EXISTING UTILITIES ARE DAMAGED, THE CONTRACTOR SHALL REPLACE THEM AT HIS OWN EXPENSE.

3. THE CONTRACTOR SHALL MAINTAIN ADEQUATE SITE DRAINAGE DURING ALL PHASES OF CONSTRUCTION. THE CONTRACTOR SHALL USE SILT FENCES (OR OTHER METHODS APPROVED BY THE ENGINEER AND TOWN) AS REQUIRED TO PREVENT SILT AND CONSTRUCTION DEBRIS FROM FLOWING ONTO ADJACENT PROPERTIES. CONTRACTOR SHALL COMPLY WITH ALL APPLICABLE FEDERAL, STATE, OR LOCAL EROSION, CONSERVATION, AND SILTATION ORDINANCES. CONTRACTOR SHALL REMOVE ALL TEMPORARY EROSION CONTROL DEVICES UPON COMPLETION OF PERMANENT DRAINAGE FACILITIES AND THE ESTABLISHMENT OF A STAND OF GRASS OR OTHER GROWTH TO PREVENT EROSION.

4. ALL EXCAVATING IS UNCLASSIFIED AND SHALL INCLUDE ALL MATERIALS ENCOUNTERED. UNUSABLE EXCAVATED MATERIAL AND ALL WASTE RESULTING FROM SITE CLEARING AND GRUBBING SHALL BE DISPOSED OF OFF SITE BY THE GRADING CONTRACTOR AT HIS EXPENSE.

5. BEFORE ANY EARTHWORK IS DONE, THE CONTRACTOR SHALL STAKE OUT AND MARK THE LIMITS OF PAVEMENT AND OTHER ITEMS ESTABLISHED BY THE PLANS. THE CONTRACTOR SHALL PROVIDE ALL NECESSARY SURVEYING FOR LINE AND GRADE CONTROL POINTS RELATED TO EARTHWORK.

6. THE CONTRACTOR SHALL SALVAGE AND PROTECT ALL EXISTING POWER POLES, SIGNS, MANHOLES, TELEPHONE RISERS, WATER VALVES, ETC. THAT ARE TO REMAIN OR BE RELOCATED DURING ALL CONSTRUCTION PHASES.

PAVING (CONTINUED)

7. THE CONTRACTOR SHALL CLEAR AND GRUB THE SITE AND PLACE, COMPACT, AND MOISTURE CONDITION ALL FILL PER THE PROJECT GEOTECHNICAL ENGINEER'S SPECIFICATIONS (REFER TO GEOTECHNICAL REPORT BY ALPHA TESTING, REPORT NO. G120099 DATED FEBRUARY 17, 2012). THE FILL MATERIAL TO BE USED SHALL BE APPROVED BY THE GEOTECHNICAL ENGINEER PRIOR TO PLACEMENT.

8. TESTING OF MATERIALS REQUIRED FOR THE CONSTRUCTION OF THE PAVING IMPROVEMENTS SHALL BE PERFORMED BY AN APPROVED AGENCY FOR TESTING MATERIALS. THE NOMINATION OF THE TESTING LABORATORY AND THE PAVEMENT OF SUCH TESTING SERVICES SHALL BE MADE BY THE CONTRACTOR. THE OWNER SHALL APPROVE THE LABORATORY NOMINATED TO DO THE TESTING OF MATERIALS. IT SHALL BE THE CONTRACTOR'S RESPONSIBILITY TO SHOW BY STANDARD TESTING PROCEDURES THAT THE WORK CONSTRUCTED DOES MEET THE REQUIREMENTS OF THE TOWN'S SPECIFICATIONS AND THESE PLANS.

9. BARRIER FREE RAMPS SHALL BE CONSTRUCTED AT ALL DRIVEWAY APPROACHES PER TOWN STANDARDS. RAMPS SHALL MEET ALL ADA AND TAS REQUIREMENTS.

10. ALL SIGNS, PAVEMENT MARKINGS, AND OTHER TRAFFIC CONTROL DEVICES SHALL CONFORM TO THE "TEXAS MANUAL ON UNIFORM TRAFFIC CONTROL DEVICES".

11. CONTRACTOR SHALL FURNISH AND INSTALL ALL PAVEMENT MARKINGS FOR FIRE LANES, PARKING STALLS, HANDICAPPED PARKING SYMBOLS, AND MISCELLANEOUS STRIPING WITHIN PARKING LOT AND AROUND BUILDING AS SHOWN ON THE PLANS. ALL PAINT FOR PAVEMENT MARKINGS SHALL ADHERE TO SECTION 2.9 OF THE N.C.T.C.O.G. STANDARD SPECIFICATIONS UNDER "TRAFFIC PAINT".

12. REFER TO GEOTECHNICAL REPORT FOR PAVING JOINT LAYOUT PLAN.

13. REFER TO GEOTECHNICAL REPORT FOR REINFORCEMENT STEEL.

14. FIRE LANES SHALL BE DESIGNATED BY CONTINUOUS PAINTED LINES FOUR (4) INCHES IN WIDTH ON EACH SIDE OF THE FIRE LANE STARTING AT THE ENTRANCE FROM THE STREET AND TO BE CONTINUED TO THE EXIT. SUCH LINES SHALL BE BRIGHT RED IN COLOR.

15. FIRE LANES ADJACENT TO CURBS SHALL BE OUTLINED BY A FOUR (4) INCH WIDE STRIP PAINTED BRIGHT RED IN COLOR ALONG THE CURB'S GUTTER LINE.

16. THE WORDS "FIRE LANE" AND "NO PARKING" SHALL BE STENCILED IN FOUR (4) INCH HIGH WHITE LETTERS ALTERNATELY EVERY FIFTEEN (15) FEET ALONG THE RED FIRE LANE STRIPES.

17. ALL HANDICAP RAMPING, STRIPING, AND PAVEMENT MARKINGS SHALL CONFORM TO THE AMERICANS WITH DISABILITIES ACT OF 2010.

18. ACCESSIBLE PEDESTRIAN ROUTES ON PUBLIC RIGHTS-OF-WAY AND PRIVATE PROPERTY SHALL COMPLY WITH AMERICANS WITH DISABILITIES ACT ACCESSIBILITY GUIDELINES (ADAAG) AND TEXAS ACCESSIBILITY STANDARDS (TAS). DESIGN AND CONSTRUCTION OF ALL CURB RAMPS ON PUBLIC RIGHTS-OF-WAY SHALL BE IN ACCORDANCE WITH TEXAS DEPARTMENT OF TRANSPORTATION STANDARD DETAIL PED-05, SHEETS 1 THROUGH 4.

19. REFERENCE LANDSCAPE PLANS FOR LOCATION AND TYPE OF HANDICAP RAMPS TO BE PROVIDED AND FOR FLATWORK.

20. ALL MATERIALS AND WORKMANSHIP SHALL CONFORM TO THE STANDARD SPECIFICATIONS FOR PUBLIC WORKS CONSTRUCTION FOR NORTH CENTRAL TEXAS, LATEST EDITION, AND ANY SPECIAL PROVISION AS APPROVED BY THE TOWN OF ADDISON, TEXAS.

21. SIDEWALKS ADJACENT TO CURB SHALL BE CONNECTED TO BACK OF CURB USING LONGITUDINAL BUTT JOINT PER TOWN OF ADDISON STANDARD DETAIL SD-P25.

22. UNLESS THE PLANS SPECIFICALLY DICTATE TO THE CONTRARY, ON-SITE AND OTHER DIRECTIONAL SIGNS SHALL BE LOCATED OUT OF THE PEDESTRIAN AND AUTOMOBILE ROUTES AND SHALL BE LOCATED BETWEEN THREE TO FIVE FEET BEHIND THE NEAREST BACK OF CURB. SIGN HEIGHT, LOCATION, AND STRUCTURE SHALL BE SUCH THAT THE SIGNS POSE NO THREAT TO PUBLIC SAFETY.

23. UNLESS THE PLANS SPECIFICALLY DICTATE TO THE CONTRARY, ON-SITE AND OTHER DIRECTIONAL SIGNS SHALL BE ORIENTED SO THEY ARE READILY VISIBLE TO THE ONCOMING TRAFFIC FOR WHICH THEY ARE INTENDED, FIELD ADJUSTMENTS OF LOCATION AND ORIENTATION OF THE SIGNS ARE TO BE MADE TO ACCOMPLISH THIS.

24. CONTRACTOR RESPONSIBLE FOR INSTALLING NECESSARY CONDUIT FOR LIGHTING, IRRIGATION, ETC. PRIOR TO PLACEMENT OF PAVEMENT. ALL CONSTRUCTION DOCUMENTS (CIVIL, MEP, LANDSCAPE, AND ARCHITECT) SHALL BE CONSULTED.

25. BEFORE PLACING PAVEMENT, CONTRACTOR SHALL VERIFY THAT SUITABLE HANDICAPPED ROUTES (PER A.D.A. & T.A.S) EXIST TO AND FROM EVERY DOOR. IN NO CASE SHALL HANDICAP RAMP SLOPES EXCEED 1 VERTICAL TO 12 HORIZONTAL. IN NO CASE SHALL SIDEWALK CROSS SLOPES EXCEED 2.0 PERCENT. IN NO CASE SHALL LONGITUDINAL SIDEWALK SLOPES EXCEED 5.0 PERCENT. CONTRACTOR SHALL CONTACT ENGINEER PRIOR TO PAVING IF ANY EXCESSIVE SLOPES ARE ENCOUNTERED. NO CONTRACTOR CHANGE ORDERS WILL BE ACCEPTED FOR A.D.A. AND T.A.S. COMPLIANCE ISSUES.

26. REFER TO GEOTECHNICAL REPORT FOR SOIL COMPACTION SPECIFICATION.

WATER AND SANITARY

1. ALL MATERIALS AND WORKMANSHIP TO CONFORM TO THE REQUIREMENTS SET FORTH IN THE TOWN OF ADDISON, TEXAS "WATER SYSTEM REQUIREMENTS" MANUAL FOR GENERAL PROCEDURES FOR THE DESIGN OF WATER LINES.

2. IN THE EVENT AN ITEM IS NOT COVERED BY THIS MANUAL, THEN THE N.T.C.O.G. GENERAL SPECIFICATIONS COVERING SUCH ITEMS SHALL APPLY.

3. WATER MAINS SHALL BE PVC C-900, PER TOWN STANDARD, EXCEPT WHEN OTHERWISE NOTED.

4. SEWER PIPE SHALL BE MINIMUM SDR 35 PVC OR PVC SDR 26.

5. WATER MAINS SHALL HAVE THE FOLLOWING MINIMUM COVER BELOW STREET GRADES:

SIZE	COVER
6"	3.5'
8"	4.0'
10"	4.0'
12"	5.0'
LARGER	AS SHOWN ON PLANS

6. PLASTIC TAPE FOR UTILITY SERVICES SHALL BE ATTACHED TO THE ENDS OF ALL WATER AND SEWER SERVICE LINES AND EXTEND ABOVE GROUND LEVEL. THE TAPE SHALL MEET THE FOLLOWING SPECIFICATION:
A. "ALLEN MARKING TAPE" OR APPROVED EQUAL.
B. ROLL MARKED CONTINUOUSLY, "CAUTION WATER LINE" OR "CAUTION SEWER LINE".
C. SIX (6) INCHES IN WIDTH.
D. GREEN TAPE FOR SEWER SERVICES.
E. BLUE TAPE FOR WATER SERVICES.

7. ALL FIRE HYDRANT MANUFACTURERS SHALL BE APPROVED BY TOWN OF ADDISON, TEXAS. THE TOWN OF ADDISON WILL REQUIRE A SUBMITTAL FOR ANY PROPOSED EQUAL PRODUCT. REFER TO TOWN OF ADDISON WATER SYSTEM REQUIREMENTS.

8. VIDEO TAPE OF SEWER LINE TO BE PROVIDED TO DIRECTOR OF PUBLIC SERVICES, BY THE CONTRACTOR.

9. FIRE HYDRANTS SHALL BE LOCATED BETWEEN 2.0' AND 4.0' FROM THE BACK OF CURB. PER TOWN OF ADDISON STANDARD DETAIL SD-W16

10. IT IS THE CONTRACTORS RESPONSIBILITY TO FIELD VERIFY EXACT LOCATIONS OF EXISTING PUBLIC AND PRIVATE UTILITIES AND SERVICES PRIOR TO COMMENCING CONSTRUCTION. THE CONTRACTOR SHALL CALL 1-800-DIG-TESS FOR FIELD LOCATION OF EXISTING UTILITIES. CALL AT LEAST 48 HOURS BEFORE LOCATIONS ARE NEEDED. NOTE THAT THE DIG TESS SERVICE DOES NOT LOCATE ALL UTILITIES, ONLY THOSE REGISTERED WITH THE SERVICE.

11. REFER TO SITE GRADING PLANS, PAVING PLANS, AND LANDSCAPE PLANS FOR FINAL GRADES FOR DETERMINING PROPOSED MANHOLE RIM ELEVATIONS.

12. LOCATIONS AND SIZES OF EXISTING PUBLIC AND PRIVATE UTILITIES SHOWN ON THESE PLANS ARE FROM TOWN AND UTILITY COMPANY RECORDS ONLY. THE CONTRACTOR IS SOLELY RESPONSIBLE FOR LOCATING ALL UTILITIES AND FOR DAMAGES RESULTING FROM FAILURE TO DO SO.

13. THE CONTRACTOR SHALL BE RESPONSIBLE FOR PROVIDING "RECORD" PLANS TO THE ENGINEER SHOWING THE LOCATION OF WATER AND SEWER SERVICES AND ANY DEVIATIONS FROM PLANS MADE DURING CONSTRUCTION.

14. THE CONTRACTOR SHALL VERIFY ALL DIMENSIONS SHOWN, COORDINATING THE HORIZONTAL AND VERTICAL LOCATION OF ALL UTILITY SERVICES ENTERING THE BUILDING AND/OR CROSSING OTHER UTILITIES.

15. ALL WATER AND SANITARY SEWER SERVICES SHALL TERMINATE FIVE (5) FEET OUTSIDE THE BUILDING, UNLESS NOTED OTHERWISE.

16. THE SITE UTILITY CONTRACTOR SHALL PROVIDE ALL MATERIALS AND APPURTENANCES NECESSARY FOR COMPLETE INSTALLATION OF THE UTILITIES. ALL PUBLIC PIPE, STRUCTURES, AND FITTINGS SHALL BE INSPECTED BY THE TOWN INSPECTOR PRIOR TO BEING COVERED. THE INSPECTOR MUST ALSO BE PRESENT DURING DISINFECTION AND PRESSURE TESTING OF ALL MAINS. THE CONTRACTOR'S BID PRICE SHALL INCLUDE ALL INSPECTION FEES.

17. THE CONTRACTOR SHALL BE SOLELY RESPONSIBLE FOR SITE TRENCH SAFETY DURING ALL PHASES OF CONSTRUCTION. THE CONTRACTOR SHALL SUBMIT A TRENCH EXCAVATION PROTECTION PLAN, SEALED BY A GEOTECHNICAL ENGINEER REGISTERED IN THE STATE OF TEXAS, FOR ALL TRENCHES DEEPER THAN FIVE (5) FEET.

18. ALL MATERIALS AND WORKMANSHIP SHALL CONFORM TO THE STANDARD SPECIFICATIONS FOR PUBLIC WORKS CONSTRUCTION FOR NORTH CENTRAL TEXAS, LATEST EDITION, AND ANY SPECIAL PROVISION AS APPROVED BY THE TOWN OF ADDISON, TEXAS.

19. THE CONTRACTOR SHALL PROVIDE CONSTRUCTION STAKING FOR ALL WATER AND SANITARY SEWER LINES AND OTHER UTILITIES.

20. REFER TO TNRCC/TCEQ DESIGN GUIDELINES (CHAPTER 290) FOR ALL UTILITY CROSSINGS.

KHA GENERAL CONSTRUCTION NOTES

1. ALL CONSTRUCTION SHALL BE IN ACCORDANCE WITH THE STANDARD SPECIFICATIONS FOR PUBLIC WORKS CONSTRUCTION FOR THE NORTH CENTRAL TEXAS COUNCIL OF GOVERNMENTS (LATEST EDITION), THE TOWN OF ADDISON STANDARDS, AND ANY SPECIAL PROVISIONS ADOPTED BY THE TOWN OF ADDISON, THE SUBDIVISION RULES AND REGULATIONS OF THE TOWN OF ADDISON (LATEST EDITION), THE PROJECT SPECIFICATION BOOK, AND THESE CONSTRUCTION PLANS. IN CASE OF CONFLICTING SPECIFICATIONS OR DETAILS, THE OWNER AND ENGINEER SHALL BE CONTACTED PRIOR TO CONSTRUCTION.

2. THE CONTRACTOR SHALL BE RESPONSIBLE TO FURNISH ALL MATERIAL AND LABOR TO CONSTRUCT THE FACILITY AS SHOWN AND DESCRIBED IN THE CONSTRUCTION DOCUMENTS IN ACCORDANCE WITH THE APPROPRIATE APPROVING AUTHORITIES, SPECIFICATIONS AND REQUIREMENTS. THE CONTRACTOR SHALL VISIT THE SITE PRIOR TO BIDDING TO DETERMINE EXISTING CONDITIONS.

3. ALL EXISTING UTILITIES SHOWN ARE LOCATED ACCORDING TO THE INFORMATION AVAILABLE TO THE ENGINEER AT THE TIME THE DRAWINGS WERE PREPARED AND HAVE NOT BEEN INDEPENDENTLY VERIFIED BY THE CITY. GUARANTEE IS NOT MADE THAT ALL EXISTING UNDERGROUND UTILITIES ARE SHOWN OR THAT THE LOCATION OF THOSE SHOWN ARE ACCURATE. THE LOCATIONS SHOWN ARE FOR BIDDING PURPOSES ONLY. FINDING THE ACTUAL LOCATION OF ANY EXISTING UTILITIES IS THE CONTRACTORS RESPONSIBILITY AND SHALL BE DONE BEFORE HE COMMENCES ANY WORK IN THE VICINITY. FURTHERMORE, THE CONTRACTOR SHALL BE FULLY RESPONSIBLE FOR ANY AND ALL DAMAGES DUE TO THE CONTRACTORS FAILURE TO EXACTLY LOCATE AND PRESERVE ANY AND ALL UTILITIES. THE OWNER OR ENGINEER WILL ASSUME NO LIABILITY FOR ANY DAMAGES SUSTAINED OR COST INCURRED BECAUSE OF THE OPERATIONS IN THE VICINITY OF EXISTING UTILITIES OR STRUCTURES, NOR FOR TEMPORARY BRACING AND SHORING OF SAME. IF IT IS NECESSARY TO SHORE, BRACE, SWING OR RELOCATE A UTILITY, THE UTILITY COMPANY OR DEPARTMENT AFFECTED SHALL BE CONTACTED BY THE CONTRACTOR AND THEIR PERMISSION OBTAINED REGARDING THE METHOD TO USE FOR SUCH WORK.

4. IT IS THE CONTRACTORS RESPONSIBILITY TO CONTACT THE VARIOUS UTILITY COMPANIES WHICH MAY HAVE BURIED OR AERIAL UTILITIES WITHIN OR NEAR THE CONSTRUCTION AREA BEFORE COMMENCING WORK. THE CONTRACTOR SHALL PROVIDE 72 HOURS MINIMUM NOTICE TO ALL UTILITY COMPANIES PRIOR TO BEGINNING CONSTRUCTION.

5. THE CONTRACTOR SHALL BE RESPONSIBLE TO OBTAIN ALL REQUIRED CONSTRUCTION PERMITS AND BONDS PRIOR TO CONSTRUCTION.

6. ANY DISCREPANCIES ON THE DRAWINGS SHALL BE IMMEDIATELY BROUGHT TO THE ATTENTION OF THE TOWN, ARCHITECT AND ENGINEER BEFORE COMMENCING WORK. NO FIELD CHANGES OR DEVIATIONS FROM DESIGN ARE TO BE MADE WITHOUT PRIOR APPROVAL OF THE CITY AND NOTIFICATION TO THE ARCHITECT AND THE ENGINEER. NO CONSIDERATION WILL BE GIVEN TO CHANGE ORDERS FOR WHICH THE TOWN, ENGINEER, AND OWNER WAS NOT CONTACTED PRIOR TO CONSTRUCTION OF THE AFFECTED ITEM. WRITTEN APPROVAL WILL BE REQUIRED FROM THE TOWN FOR ANY CHANGES TO PLANS PRIOR TO CONSTRUCTION.

7. ALL NECESSARY INSPECTIONS AND/OR CERTIFICATIONS REQUIRED BY CODES, JURISDICTIONAL AGENCIES AND/OR UTILITY SERVICE COMPANIES SHALL BE PERFORMED PRIOR TO BUILDING POSSESSION AND THE FINAL CONNECTION OF SERVICES.

8. CONTRACTOR SHALL VERIFY BENCHMARKS AND DATUMS PRIOR TO COMMENCING CONSTRUCTION OR STAKING OF IMPROVEMENTS.

9. EXISTING CONTOURS AS SHOWN ON THIS PLAN WERE TAKEN FROM A FIELD TOPOGRAPHIC SURVEY PREPARED BY KIMLEY-HORN AND ASSOCIATES, INC.

10. CONTRACTOR SHALL THOROUGHLY CHECK COORDINATION OF CIVIL, LANDSCAPE, MEP, ARCHITECTURAL, AND OTHER PLANS PRIOR TO COMMENCING CONSTRUCTION. OWNER/ENGINEER SHALL BE NOTIFIED OF ANY DISCREPANCY PRIOR TO COMMENCING WITH CONSTRUCTION.

11. THE CONTRACTOR IS RESPONSIBLE FOR COORDINATING ADJUSTMENTS, RELOCATIONS AND INSTALLATIONS OF FRANCHISE UTILITIES NECESSARY FOR ON-SITE AND OFF-SITE CONSTRUCTION.

12. CONTRACTOR IS RESPONSIBLE FOR ALL CONSTRUCTION FIELD STAKING AND TESTING, UNLESS SPECIFIED OTHERWISE BY THE OWNER.

13. UNLESS NOTED OTHERWISE, CONTRACTOR SHALL REPLACE ANY FENCING, CURBING, ETC. THAT IS DESTROYED DUE TO THE CONSTRUCTION ACTIVITIES.

14. TRENCH SAFETY DESIGN WILL BE THE RESPONSIBILITY OF THE UTILITY CONTRACTOR. CONTRACTOR SHALL SUBMIT A TRENCH SAFETY PLAN (SEALED BY A PROFESSIONAL ENGINEER LICENSED IN THE STATE OF TEXAS) TO THE TOWN OF ADDISON PUBLIC WORKS DEPARTMENT FOR REVIEW PRIOR TO THE START OF ANY UTILITY CONSTRUCTION.

15. ALL CONTRACTORS MUST CONFINE THEIR ACTIVITIES TO THE WORK AREA. NO ENCROACHMENTS ONTO DEVELOPED OR UNDEVELOPED AREAS WILL BE ALLOWED. ANY DAMAGE RESULTING THEREFROM SHALL BE CONTRACTOR'S RESPONSIBILITY TO REPAIR.

16. LIGHT POLES AND SIGNS SHALL NOT BE PLACED IN ADA ACCESSIBLE ROUTES OR ACCESSIBLE ACCESS AISLES.

17. ALL AREAS IN EXISTING RIGHTS-OF-WAY DISTURBED BY SITE CONSTRUCTION SHALL BE REGRADED AND LANDSCAPED OR PAVED (TO WHATEVER CONDITION EXISTED BEFORE DISTURBANCE). ALL DISTURBED AREAS SHALL BE REPAIRED TO THE SAME OR BETTER CONDITION THAN BEFORE AREA WAS DISTURBED.

18. THE CONTRACTOR SHALL HAVE AVAILABLE AT THE JOB SITE AT ALL TIMES ONE COPY OF THE CONTRACT DOCUMENTS INCLUDING PLANS, SPECIFICATIONS, AND SPECIAL CONDITIONS, COPIES OF ANY REQUIRED CONSTRUCTION PERMITS, AND EROSION CONTROL PLANS AND INSPECTION REPORTS (SWPPP).

19. THE CONTRACTOR SHALL REVIEW AND VERIFY ALL DIMENSIONS, ELEVATIONS, AND EXISTING CONTOURS SHOWN ON THE PLANS AND ALL FIELD CONDITIONS THAT MAY AFFECT CONSTRUCTION. SHOULD DISCREPANCIES OCCUR, THE CONTRACTOR SHALL NOTIFY THE ENGINEER TO OBTAIN THE ENGINEER'S CLARIFICATION BEFORE COMMENCING WITH THE CONSTRUCTION.

20. PROPOSED CONTOURS AND SPOT ELEVATIONS SHOWN REFLECT FINISH SURFACE. THE LIMITS OF EARTHWORK IN PAVED AREAS IS THE BOTTOM OF PAVEMENT.

21. CONTRACTOR SHALL USE ALL NECESSARY SAFETY PRECAUTIONS TO AVOID CONTACT WITH OVERHEAD AND UNDERGROUND POWER LINES.

22. THE CONTRACTOR SHALL MAINTAIN ADEQUATE SITE DRAINAGE DURING ALL PHASES OF CONSTRUCTION. THE CONTRACTOR SHALL USE SILT FENCES (OR OTHER METHODS APPROVED BY THE ENGINEER AND CITY) AS REQUIRED TO PREVENT SILT AND CONSTRUCTION DEBRIS FROM FLOWING ONTO ADJACENT PROPERTIES. CONTRACTOR SHALL COMPLY WITH ALL APPLICABLE FEDERAL, STATE, OR LOCAL EROSION, CONSERVATION, AND SILTATION ORDINANCES. CONTRACTOR SHALL REMOVE ALL TEMPORARY EROSION CONTROL DEVICES UPON COMPLETION OF PERMANENT DRAINAGE FACILITIES AND THE ESTABLISHMENT OF A STAND OF GRASS OR OTHER GROWTH TO PREVENT EROSION.

23. CONTRACTOR TO DISPOSE OF ALL EXCESS EXCAVATION MATERIALS AS DIRECTED BY THE OWNER.

24. ALL EXCAVATION IS UNCLASSIFIED AND SHALL INCLUDE ALL MATERIALS ENCOUNTERED. UNUSABLE EXCAVATED MATERIAL AND ALL WASTE RESULTING FROM SITE CLEARING AND GRUBBING SHALL BE DISPOSED OF OFF SITE BY THE GRADING CONTRACTOR AT HIS EXPENSE.

25. THE CONTRACTOR SHALL CLEAR AND GRUB THE SITE AND PLACE, COMPACT, AND MOISTURE CONDITION ALL FILL PER THE PROJECT GEOTECHNICAL ENGINEER'S SPECIFICATIONS. THE FILL MATERIAL TO BE USED SHALL BE APPROVED BY THE GEOTECHNICAL ENGINEER PRIOR TO PLACEMENT.

26. ALL SIGNS, PAVEMENT MARKINGS, AND OTHER TRAFFIC CONTROL DEVICES SHALL CONFORM TO THE "TEXAS MANUAL ON UNIFORM TRAFFIC CONTROL DEVICES".

27. ALL REINFORCING STEEL SHALL CONFORM TO ASTM A-615, GRADE 60, AND SHALL BE SUPPORTED BY BAR CHAIRS.

28. WATER LINES CROSSING STORM SEWER LINES AND SANITARY SEWER LINES SHALL BE IN CONFORMANCE WITH ALL TEXAS COMMISSION ON ENVIRONMENTAL QUALITY (TCEQ) SPECIFICATIONS.

29. THE SITE UTILITY CONTRACTOR SHALL PROVIDE ALL MATERIALS AND APPURTENANCES NECESSARY FOR COMPLETE INSTALLATION OF THE UTILITIES. ALL PUBLIC PIPE STRUCTURES AND FITTINGS SHALL BE INSPECTED BY THE CITY INSPECTOR PRIOR TO BEING COVERED. THE INSPECTOR MUST ALSO BE PRESENT DURING DISINFECTION AND PRESSURE TESTING OF ALL MAINS. THE CONTRACTOR'S BID PRICE SHALL INCLUDE ALL INSPECTION FEES. AS AN ALTERNATE, THE OWNER RESERVES THE RIGHT TO PAY THE INSPECTION FEES DIRECTLY TO THE CITY.

30. ALL FIRE HYDRANTS, FITTINGS, VALVES, AND PIPE ENDS SHALL BE BLOCKED WITH CONCRETE PER CITY STANDARDS.

31. TOP RIM ELEVATIONS OF ALL SANITARY SEWER MANHOLES SHALL BE COORDINATED WITH TOP OF PAVEMENT OR FINISHED GRADE.

32. THE SITE UTILITY CONTRACTOR SHALL PROVIDE ALL MATERIALS AND APPURTENANCES NECESSARY FOR COMPLETE INSTALLATION OF THE STORM SEWER.

33. CONTRACTOR SHALL CONSTRUCT PROPOSED PAVEMENT TO MATCH EXISTING PAVEMENT WITH A SMOOTH, FLUSH, CONNECTION.

34. THE CONTRACTOR SHALL PROTECT ALL EXISTING STRUCTURES, UTILITIES, AND OTHER FACILITIES TO REMAIN AND SHALL REPAIR ANY DAMAGES DUE TO HIS CONSTRUCTION ACTIVITIES AT NO COST TO THE OWNER.

35. CONTRACTOR TO ADJUST ALL GATE VALVE COVERS TO MATCH PROPOSED PAVING GRADES.

36. THE OPERATING NUT OF ALL GATE VALVES SHALL BE 2 FEET BELOW FINISH GRADE (MINIMUM).

36. THESE PLANS, PREPARED BY KIMLEY-HORN AND ASSOCIATES, INC. DO NOT EXTEND TO OR INCLUDE DESIGNS OR SYSTEMS PERTAINING TO THE SAFETY OF THE CONTRACTOR OR ITS EMPLOYEES, AGENTS OR REPRESENTATIVES IN THE PERFORMANCE OF THE WORK. THE ENGINEER'S SEAL HEREON DOES NOT EXTEND TO ANY SUCH SAFETY SYSTEM THAT MAY NOW OR HEREAFTER BE INCORPORATED IN THESE PLANS. THE CONTRACTOR SHALL BE RESPONSIBLE FOR IMPLEMENTATION OF ALL REQUIRED SAFETY PROCEDURES AND PROGRAMS.

37. REFER TO SWPPP REPORT AND EROSION CONTROL PLANS FOR APPLICABLE NOTES.

38. REFER TO ARCHITECTURAL AND STRUCTURAL PLANS TO VERIFY ALL BUILDING DIMENSIONS.

39. REFER TO ARCHITECTURAL PLANS FOR DETAILED BUILDING ENTRANCE LAYOUTS, RAMPS, LANDSCAPE, AND SIDEWALKS.

NOTE

REFER TO
TCEQ DESIGN GUIDELINES
(CHAPTER 217-SEWER)
FOR ALL UTILITY CROSSINGS.

GEOTECHNICAL REPORT
ALPHA REPORT NO. G120099
ALPHA TESTING, INC
DALLAS, TEXAS
FEBRUARY 17, 2012

RECORD DRAWINGS
(October 2013)
Information Provided By:
BOB MOORE
CONSTRUCTION

STOP!
CALL BEFORE YOU DIG
DIG TESS
1-800-DIG-TESS
(at least 72 hours prior to digging)

WARNING: CONTRACTOR TO VERIFY PRESENCE AND EXACT LOCATION OF ALL UTILITIES PRIOR TO CONSTRUCTION.

No.	REVISIONS	DATE	BY

Kimley-Horn and Associates, Inc.
State of Texas Registration No. F-928
5750 GENESIS COURT, SUITE 200, FRISCO, TX 75034
PHONE: 972-335-3580 FAX: 972-335-3779
WWW.KIMLEY-HORN.COM

STATE OF TEXAS
ROY BRASWELL
104908
LICENSED PROFESSIONAL ENGINEER
9/21/12

KHA PROJECT	DATE	SCALE	DESIGNED BY	DRAWN BY	CHECKED BY
063319038	9/27/2012	AS SHOWN	TBB	AAE	TBB

VILLAGE ON THE PARKWAY
ADDISON, TEXAS

GENERAL NOTES

SHEET NUMBER
C-02

This document, together with the concepts and designs presented herein, as an instrument of service, is intended only for the specific purpose and client for which it was prepared. Reuse of and improper reliance on this document without written authorization and adaptation by Kimley-Horn and Associates, Inc. shall be without liability to Kimley-Horn and Associates, Inc.

PLOTTED BY MAURICIO, MARLA 9/27/2012 8:49 AM
DWG NAME K:\FRI_CIVIL\063319038-VOP\DWG\PLAN SET\C-02-GENERAL NOTES.DWG [C-02 GENERAL NOTES]
LAST SAVED 8/28/2012 1:40 PM

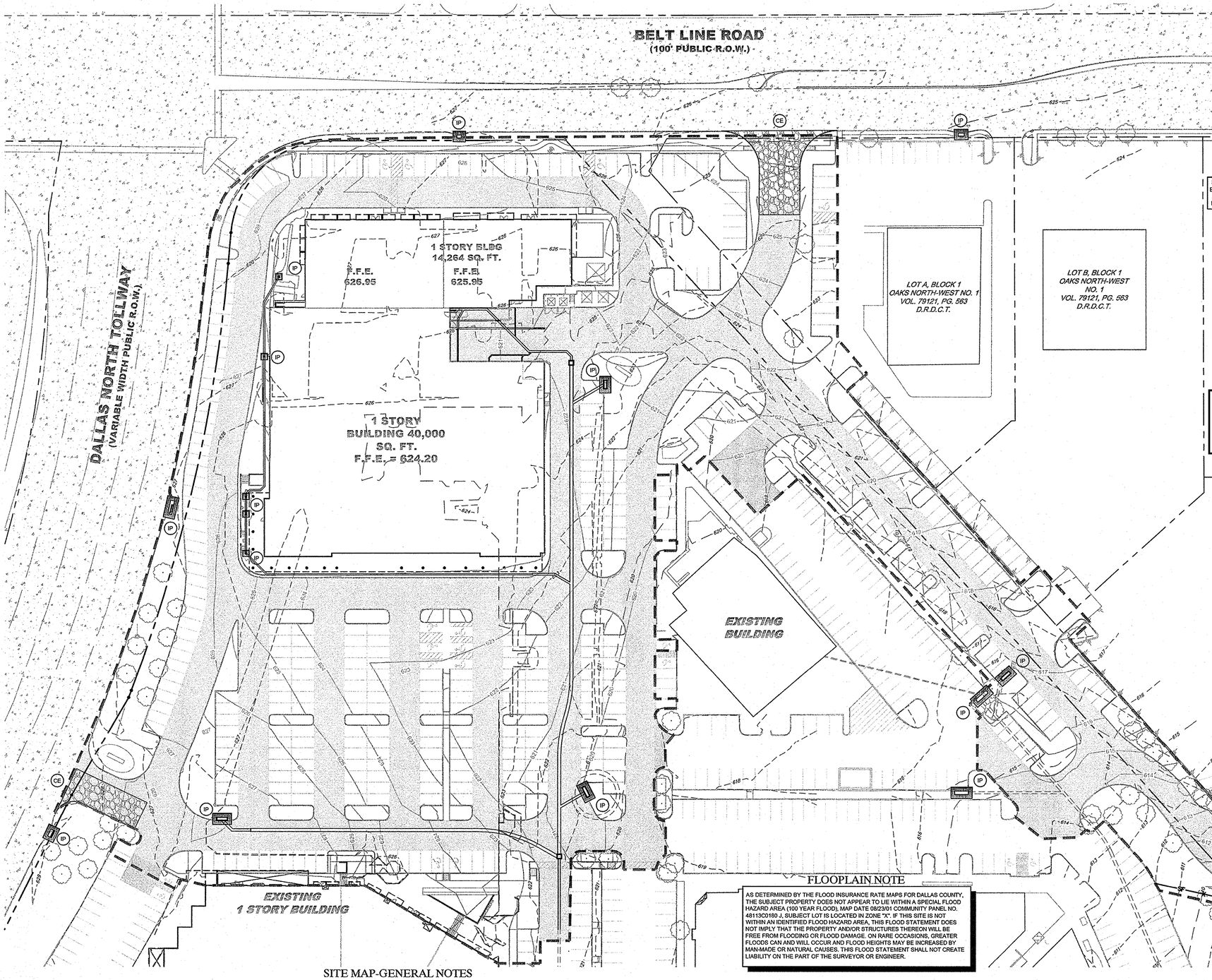

BENCHMARKS

BM 1 2" BRASS DISK STAMPED "TXDOT COA-5 GPS" 190± SOUTH FROM THE INTERSECTION OF EDWIN LEWIS DRIVE AND QUORUM DRIVE; 2± FROM WEST EDGE OF SIDEWALK, 50.5± FROM THE WEST SIDE OF MEDIAN IN QUORUM DRIVE & 76± FROM FIRE HYDRANT.

ELEV=630.10

BM 2 2" BRASS DISK STAMPED "TXDOT COA-10 GPS" AT THE NORTHWEST CORNER OF HAVENSHIRE PLACE AND BELLBROOK DRIVE; 21.80± FROM SANITARY SEWER MANHOLE, 11.10'± FROM STREET SIGN & 2.45± TO PC IN SIDEWALK.

ELEV=593.89

BM 3 CITY OF DALLAS WATER DEPT. BENCHMARK; 1□ ON CONCRETE BASE OF 6' BRICK WALL AT THE NORTHEAST CORNER OF CELESTIAL ROAD AND MONTFORT DRIVE.

ELEV=626.81

N
W E
S
0 40' 80'
GRAPHIC SCALE 40'

NOTE

REFER TO SHEET C-04 FOR EROSION CONTROL DETAILS AND ADDITIONAL GENERAL EROSION CONTROL NOTES.

NOTE

PRIOR TO CONSTRUCTION, CONTRACTOR TO NOTIFY ENGINEER IMMEDIATELY SHOULD THERE BE ANY DISCREPANCIES OR IF EXISTING FIELD CONDITIONS VARY FROM THOSE SHOWN ON THESE PLANS.

EROSION CONTROL SCHEDULE AND PHASING

THE PROJECT SHALL GENERALLY CONFORM TO THE FOLLOWING:

PHASE 1 - GRADING
- A. CONSTRUCT TEMPORARY CONSTRUCTION ENTRANCE AND SILT FENCE ACCORDING TO THE APPROXIMATE LOCATION AND SHOWN ON GRADING AND EROSION CONTROL PLAN NOTES AND DETAIL SHEET.
- B. BEGIN CLEARING AND GRADING OF SITE.
- C. SEED AND RE-VEGETATE SLOPES WHERE SHOWN.

PHASE 2 - UTILITIES
- A. KEEP ALL STORM WATER POLLUTION PREVENTION MEASURES IN PLACE.
- B. INSTALL STORM DRAINS AS SPECIFIED ON PLAN SHEETS.
- C. INSTALL INLET PROTECTION.

PHASE 3 - PAVING
- A. KEEP ALL STORM WATER POLLUTION PREVENTION MEASURES IN PLACE. REMOVE AS NEEDED TO PAVE.
- B. STABILIZE SUBGRADE.
- C. PAVE PARKING LOT AND SIDEWALKS AS SPECIFIED ON PLAN SHEETS.
- D. REMOVE TEMPORARY CONSTRUCTION ENTRANCE.

PHASE 4 - LANDSCAPING AND SOIL STABILIZATION
- A. RE-VEGETATE LOT AND PARKWAYS
- B. LANDSCAPE CONTRACTOR SHALL RE-VEGETATE ALL AREAS RESERVED FOR LANDSCAPE VEGETATIVE COVERS.
- C. REMOVE EROSION CONTROL DEVICES WHEN GROUND COVER ESTABLISHED.

RECORD DRAWINGS
(October 2013)
Information Provided By:
BOB MOORE CONSTRUCTION

SITE MAP-SITE SPECIFIC NOTES

1. CONSTRUCTION ENTRANCE SHALL BE LOCATED SO AS TO PROVIDE THE LEAST AMOUNT OF DISTURBANCE TO THE FLOW OF TRAFFIC IN AND OUT OF THE SITE. ADDITIONALLY, THE CONSTRUCTION ENTRANCE SHALL BE LOCATED TO COINCIDE WITH THE PHASING OF THE PARKING LOT CONSTRUCTION.

2. CONTRACTOR SHALL PROVIDE INLET PROTECTION FOR ANY AFFECTED INLETS DOWNSTREAM OF THE PROPOSED IMPROVEMENTS, IF NEEDED.

3. THE NATURE OF THIS SITE'S CONSTRUCTION CONSISTS OF CLEARING & SITE PREPARATION, EARTHWORK, PAVING, AND LANDSCAPING.

4. SEDIMENTATION BASIN:
NEITHER A TEMPORARY NOR PERMANENT SEDIMENTATION BASIN HAS BEEN PROVIDED ON THIS SITE BECAUSE:
1. SITE IS LESS THAN 10 ACRES IN AREA.

5. POST CONSTRUCTION STORM WATER POLLUTION CONTROL MEASURES INCLUDE STABILIZATION BY PERMANENT PAVING AND LANDSCAPING.

6. VELOCITY DISSIPATION DEVICES ARE NOT REQUIRED AT THIS SITE.

7. DISTURBED PORTIONS OF SITE MUST BE STABILIZED. STABILIZATION PRACTICES MUST BE INITIATED WITHIN 14 DAYS IN PORTIONS OF THE SITE WHERE CONSTRUCTION HAS BEEN EITHER TEMPORARILY OR PERMANENTLY CEASED, UNLESS EXCEPTED WITHIN THE TPDES PERMIT. CONTRACTOR SHALL REMOVE TEMPORARY EROSION CONTROL DEVICES UPON COMPLETION OF STABILIZATION OR PERMANENT DRAINAGE FACILITIES.

9. CONTRACTOR IS RESPONSIBLE FOR MODIFYING THE SWPPP/SITE MAP TO INCLUDE BMP'S FOR ANY OFF-SITE MATERIAL WASTE, BORROW OR EQUIPMENT STORAGE AREAS.

STOP!
CALL BEFORE YOU DIG
DIG TESS
1-800-DIG-TESS
(at least 72 hours prior to digging)

DISTURBED AREA

TOTAL AREA DISTURBED	7.4 AC.

FLOOPLAIN NOTE

AS DETERMINED BY THE FLOOD INSURANCE RATE MAPS FOR DALLAS COUNTY, THE SUBJECT PROPERTY DOES NOT APPEAR TO LIE WITHIN A SPECIAL FLOOD HAZARD AREA (100 YEAR FLOOD), MAP DATE 08/23/01 COMMUNITY PANEL NO. 48113C0180 J, SUBJECT LOT IS LOCATED IN ZONE "X". IF THIS SITE IS NOT WITHIN AN IDENTIFIED FLOOD HAZARD AREA, THIS FLOOD STATEMENT DOES NOT IMPLY THAT THE PROPERTY AND/OR STRUCTURES THEREON WILL BE FREE FROM FLOODING OR FLOOD DAMAGE. ON RARE OCCASIONS, GREATER FLOODS CAN AND WILL OCCUR AND FLOOD HEIGHTS MAY BE INCREASED BY MAN-MADE OR NATURAL CAUSES. THIS FLOOD STATEMENT SHALL NOT CREATE LIABILITY ON THE PART OF THE SURVEYOR OR ENGINEER.

!!WARNING!!

EXISTING UTILITIES IN THE AREA. CONTRACTOR SHALL FIELD VERIFY THE LOCATION OF ALL EXISTING UTILITIES WITH THE PROVIDER PRIOR TO START OF CONSTRUCTION AND SHALL IMMEDIATELY NOTIFY THE ENGINEER OF ANY CONFLICTS DISCOVERED. CONTRACTOR IS RESPONSIBLE FOR COORDINATING UTILITY RELOCATION WHERE NECESSARY AND PROTECTING EXISTING UTILITIES (SHOWN OR NOT SHOWN). IF ANY EXISTING UTILITIES ARE DAMAGED, THE CONTRACTOR SHALL REPLACE THEM AT THEIR OWN EXPENSE.

NOTE

IN ORDER TO COMPLY WITH THE UNITED STATES ENVIRONMENTAL PROTECTION AGENCY AND ALL OTHER AGENCIES HAVING JURISDICTION, THE CONTRACTOR SHALL PROVIDE ANY ADDITIONAL EROSION OR POLLUTION DEVICES, AS REQUIRED, DURING CONSTRUCTION. FILING OF N.O.I. AND N.O.T. (PER EPA REQUIREMENTS) SHALL BE THE RESPONSIBILITY OF THE CONTRACTOR AND THE OWNER.

SITE MAP-GENERAL NOTES

1. CONTRACTOR IS SOLELY RESPONSIBLE FOR SELECTION, IMPLEMENTATION, MAINTENANCE, AND EFFECTIVENESS OF ALL SWPPP CONTROLS - CONTROLS SHOWN ON THIS SITE MAP ARE SUGGESTED CONTROLS ONLY.

2. CONTRACTOR SHALL RECORD INSTALLATION, MAINTENANCE OR MODIFICATION, AND REMOVAL DATES FOR EACH BMP EMPLOYED (WHETHER CALLED OUT ON ORIGINAL SWPPP OR NOT) DIRECTLY ON THE SITE MAP.

3. DRAINAGE PATTERNS ARE SHOWN ON THIS PLAN BY PROPOSED AND EXISTING CONTOURS, FLOW ARROWS, AND SLOPES.

4. TEMPORARY AND PERMANENT STABILIZATION PRACTICES AND BMP'S SHALL BE INSTALLED AT THE EARLIEST POSSIBLE TIME DURING THE CONSTRUCTION SEQUENCE. AS AN EXAMPLE, PERIMETER SILT FENCE SHALL BE INSTALLED BEFORE COMMENCEMENT OF ANY GRADING ACTIVITIES. OTHER BMP'S SHALL BE INSTALLED AS SOON AS PRACTICABLE AND SHALL BE MAINTAINED UNTIL FINAL SITE STABILIZATION IS ATTAINED. CONTRACTOR SHALL ALSO REFERENCE CIVIL PLANS SINCE PERMANENT STABILIZATION IS PROVIDED BY LANDSCAPING AND SITE PAVING.

5. BMP'S HAVE BEEN LOCATED AS INDICATED ON THIS PLAN IN ACCORDANCE WITH GENERALLY ACCEPTED ENGINEERING PRACTICES IN ORDER TO MINIMIZE SEDIMENT TRANSFER. FOR EXAMPLE: SILT FENCES LOCATED AT TOE OF SLOPE AND INLET PROTECTION FOR INLETS RECEIVING SEDIMENT FROM SITE RUN-OFF.

6. SANITARY SEWER EFFLUENT IS DISPOSED OF VIA AN ONSITE SEWER SYSTEM CONNECTED TO A MUNICIPAL SEWER SYSTEM.

7. CONTRACTOR SHALL KEEP SEDIMENTATION OFF OF EXISTING PAVEMENT.

LEGEND

735	PROPOSED CONTOURS
735	EXISTING CONTOURS
	INLET PROTECTION
	LIMITS OF DISTURBANCE
SF	SILT FENCE
	CONSTRUCTION ENTRANCE / EXIT

EROSION CONTROL CONSTRUCTION PLAN

		INSTALLATION	MAINTENANCE	REMOVAL
CE	CONSTRUCTION ENTRANCE	PRIOR TO STARTING CONSTRUCTION	INSPECTIONS SHALL BE MADE WEEKLY AND AFTER RAIN STORM EVENTS TO ENSURE THAT THE FACILITY IS FUNCTIONING PROPERLY. AGGREGATE PAD SHALL BE WASHED DOWN OR REPLACED WHEN SEDIMENT OR MUD HAS CLOGGED THE VOID SPACES BETWEEN THE STONES OR MUD IS BEING TRACKED ONTO THE PUBLIC ROADWAY. RUNOFF FROM WASHDOWN OPERATION SHALL BE FILTERED THROUGH ANOTHER B.M.P. PRIOR TO DRAINING OFF-SITE.	IMMEDIATELY AFTER PAVEMENT PLACEMENT
SF	SILT FENCE	PRIOR TO STARTING CONSTRUCTION	INSPECTIONS SHALL BE MADE WEEKLY AND AFTER RAIN STORM EVENTS. SEDIMENT SHALL BE REMOVED FROM BEHIND THE FENCE WHEN THE DEPTH OF SEDIMENT HAS BUILT UP TO ONE-THIRD THE HEIGHT OF THE FENCE ABOVE GRADE.	TO BE REMOVED AFTER PAVING IS COMPLETE AND GRASS COVER IS ESTABLISHED
IP	INLET PROTECTION	UPON INLET COMPLETION	INSPECTIONS SHALL BE MADE WEEKLY AND AFTER RAIN STORM EVENTS. SEDIMENT SHALL BE REMOVED FROM BEHIND THE FILTER FABRIC WHEN THE DEPTH OF SEDIMENT HAS BUILT UP TO ONE-THIRD THE HEIGHT OF THE INLET ABOVE GRADE. INSPECT FOR A 2 INCH GAP BETWEEN TOP OF FABRIC AND TOP OF INLET OPENING. INSPECT FOR GAPS BETWEEN THE PAVEMENT AND FILTER FABRIC.	TO BE REMOVED AFTER SITE GRADING AROUND EXIST INLET AND FINAL ACCEPTANCE.

No.	REVISIONS	DATE	BY

Kimley-Horn and Associates, Inc.
State of Texas Registration No. F-928
5750 GENESIS COURT, SUITE 200, FRISCO, TX 75034
PHONE: 972-335-3580 FAX: 972-335-3779
WWW.KIMLEY-HORN.COM

STATE OF TEXAS
ROY BRASWELL
104908
LICENSED
PROFESSIONAL ENGINEER
9/27/12

KHA PROJECT 063319038
DATE 9/27/2012
SCALE AS SHOWN
DESIGNED BY TBB
DRAWN BY AAE
CHECKED BY TBB

VILLAGE ON THE PARKWAY
ADDISON, TEXAS

EROSION CONTROL PLAN

SHEET NUMBER
C-03

PLOTTED BY MAURICIO, MARIA 9/27/2012 9:09 AM
DWG NAME K:\FRI_CIV\063319038-VOPD\WOFP\AN-SETC\C03-EROD.DWG [C-03 EROSION CONTROL PLAN]
LAST SAVED 9/26/2012 4:28 PM
This document, together with the concepts and designs presented herein, as an instrument of service, is intended only for the specific purpose and client for which it was prepared. Reuse of and improper reliance on this document without written authorization and adaptation by Kimley-Horn and Associates, Inc. shall be without liability to Kimley-Horn and Associates, Inc.

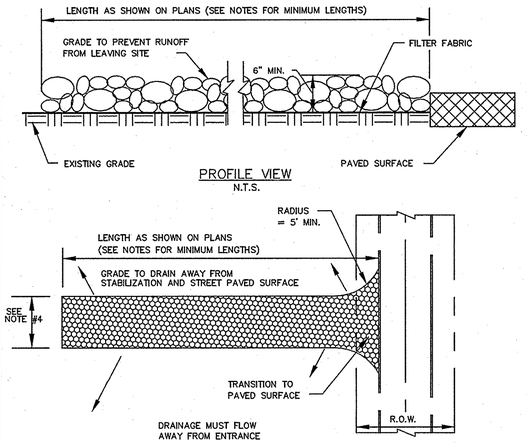

STABILIZED CONSTRUCTION ENTRANCE

STABILIZED CONSTRUCTION ENTRANCE GENERAL NOTES:

1. STONE SHALL BE 3 TO 5 INCH DIAMETER CRUSHED ROCK OR ACCEPTABLE CRUSHED PORTLAND CEMENT CONCRETE.
2. LENGTH SHALL BE SHOWN ON PLANS, WITH A MINIMUM LENGTH OF 30 FEET FOR LOTS WHICH ARE LESS THAN 150 FEET FROM EDGE OF PAVEMENT. THE MINIMUM DEPTH IN ALL OTHER CASES SHALL BE 50 FEET.
3. STONE LAYER THICKNESS SHALL NOT BE LESS THAN 6
4. THE WIDTH SHALL BE NO LESS THAN THE FULL WIDTH OF ALL POINTS OF INGRESS OR EGRESS.
5. WHEN NECESSARY, VEHICLES SHALL BE CLEANED TO REMOVE SEDIMENT PRIOR TO ENTRANCE ONTO A PUBLIC ROADWAY. WHEN WASHING IS REQUIRED, IT SHALL BE DONE ON AN AREA STABILIZED WITH CRUSHED STONE WITH DRAINAGE FLOWING AWAY FROM BOTH THE STREET AND THE STABILIZED ENTRANCE. ALL SEDIMENT SHALL BE PREVENTED FROM ENTERING ANY STORM DRAIN, DITCH OR WATERCOURSE USING APPROVED METHODS.
6. THE ENTRANCE SHALL BE MAINTAINED IN A CONDITION WHICH WILL PREVENT TRACKING OR FLOWING OF SEDIMENT ONTO PAVED SURFACES. THIS MAY REQUIRE PERIODIC TOP DRESSING WITH ADDITIONAL STONE AS CONDITIONS DEMAND. ALL SEDIMENT SPILLED, DROPPED, WASHED, OR TRACKED ONTO PAVED SURFACES MUST BE REMOVED IMMEDIATELY.
7. THE ENTRANCE MUST BE PROPERLY GRADED OR INCORPORATE A DRAINAGE SWALE TO PREVENT RUNOFF FROM LEAVING THE CONSTRUCTION SITE.

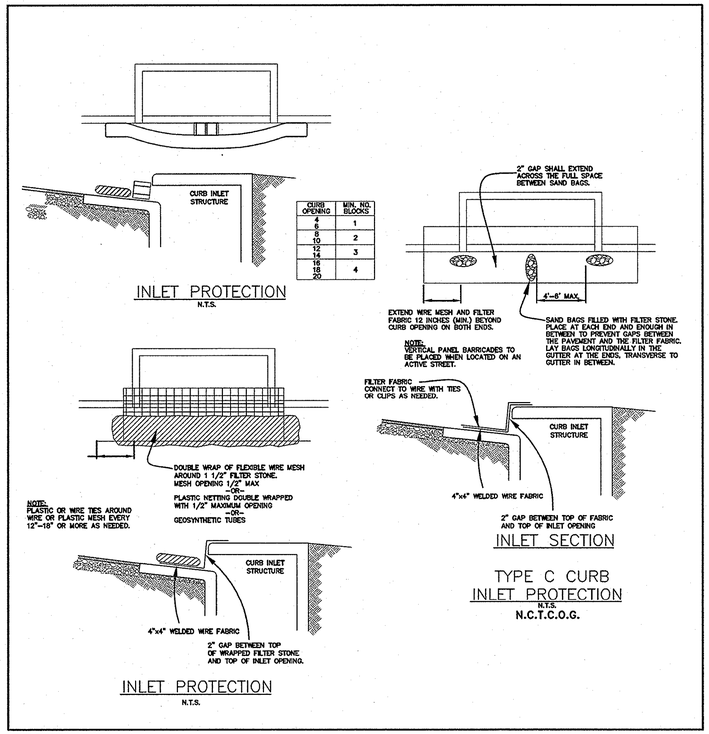

GENERAL NOTES

1. THE OWNER AND CONTRACTOR SHALL EACH SUBMIT A CONSTRUCTION SITE NOTICE (TXR 150000 FORM) TO THE CITY OF FRISCO AT LEAST 48 HOURS PRIOR TO COMMENCING CONSTRUCTION ACTIVITIES. OWNER AND CONTRACTOR ARE RESPONSIBLE FOR RETAINING PROOF THAT THE FORM WAS SUBMITTED TO THE CITY (PROOF MUST CONSIST OF CERTIFIED MAIL WITH RETURN RECEIPT).

2. TEXAS POLLUTANT DISCHARGE ELIMINATION SYSTEM (TPDES) CONSTRUCTION GENERAL PERMIT TXR150000, LANDSCAPE PLANS, GEOTECHNICAL INVESTIGATION (IF PREPARED), CIVIL ENGINEERING PLANS AND ALL APPLICABLE SPECIFICATIONS ARE HEREBY INCORPORATED INTO THIS SWPPP. CONTRACTOR SHALL OBTAIN AND KEEP A CURRENT COPY OF THESE DOCUMENTS AT THE CONSTRUCTION SITE.

3. ALL EROSION AND SEDIMENTATION CONTROLS MUST BE DESIGNED, INSTALLED AND MAINTAINED TO RETAIN SEDIMENT ON-SITE TO THE EXTENT PRACTICABLE.

4. ALL CONTROL MEASURES MUST BE SELECTED, INSTALLED, AND MAINTAINED IN ACCORDANCE WITH MANUFACTURERS SPECIFICATIONS AND GOOD ENGINEERING PRACTICES.

5. OFF-SITE ACCUMULATIONS OF SEDIMENT ESCAPING PROJECT SITE MUST BE REMOVED AT A FREQUENCY NECESSARY TO MINIMIZE OFF-SITE IMPACTS. FOR EXAMPLE, SEDIMENTATION WITHIN STREETS ADJACENT TO THE PROJECT SITE MUST BE REMOVED PRIOR TO RAINFALL EVENTS. ALL FINES IMPOSED FOR TRACKING ONTO PUBLIC ROADS SHALL BE PAID BY THE CONTRACTOR. IN ANY EVENT SILT SHALL ALWAYS BE REMOVED SUCH THAT PONDING IN A STREET IS PREVENTED.

6. CONTRACTOR MUST REMOVE SEDIMENT FROM ALL APPLICABLE CONTROLS WHEN DESIGN SILT STORAGE CAPACITY HAS BEEN REDUCED BY 50%.

7. CONTRACTOR SHALL ENSURE THAT ALL LITTER, CONSTRUCTION DEBRIS, AND CONSTRUCTION CHEMICALS ARE PREVENTED FROM BECOMING POLLUTANT SOURCES.

8. OFF-SITE MATERIAL STORAGE AREAS USED SOLELY FOR THIS PROJECT, INCLUDING DIRT STOCKPILES AND BORROW AREAS (AS APPLICABLE), MUST BE PREVENTED FROM BECOMING POLLUTANT SOURCES BY INSTALLATION OF BMP'S.

9. CONTRACTOR SHALL ENSURE THAT EXISTING VEGETATION IS PRESERVED WHERE ATTAINABLE.

10. DISTURBED PORTIONS OF SITE MUST BE STABILIZED. STABILIZATION PRACTICES MUST BE INITIATED WITHIN 14 DAYS IN PORTIONS OF THE SITE WHERE CONSTRUCTION HAS BEEN EITHER TEMPORARILY OR PERMANENTLY CEASED, UNLESS EXCEPTED WITHIN THE TPDES PERMIT.

11. CONTRACTOR MUST MAINTAIN RECORDS OF DATES IN THE SWPPP OF WHEN MAJOR GRADING ACTIVITIES OCCUR, WHEN CONSTRUCTION ACTIVITIES EITHER TEMPORARILY OR PERMANENTLY CEASE ON A PORTION OF THE SITE, AND WHEN STABILIZATION MEASURES ARE INITIATED.

12. CONTRACTOR SHALL ENSURE THAT SWPPP IS CONSISTENT WITH SEDIMENT AND EROSION SITE PLANS, STORM WATER PERMITS, AND STORM WATER MANAGEMENT PLANS APPROVED BY STATE, TRIBAL, OR LOCAL OFFICIALS. UPDATES TO SWPPP ARE REQUIRED UPON WRITTEN NOTICE TO PERMITTEE OF CHANGES APPLICABLE TO STORM WATER PERMITS, SEDIMENT AND EROSION CONTROL PLANS, OR STORM WATER MANAGEMENT PLANS BY SUCH OFFICIALS.

13. ALL EROSION AND SEDIMENTATION CONTROL MEASURES AND ANY OTHER PROTECTIVE MEASURES IDENTIFIED IN THE SWPPP MUST BE MAINTAINED IN EFFECTIVE OPERATING CONDITION. WHEN INSPECTIONS IDENTIFY CONTROLS OPERATING INEFFECTIVELY, THE CONTROLS SHALL BE MAINTAINED PRIOR TO THE NEXT RAINFALL EVENT OR AS NECESSARY TO MAINTAIN EFFECTIVENESS OF THE CONTROL, OR AS SOON AS PRACTICABLE.

14. CONTRACTOR SHALL INSPECT DISTURBED AREAS, MATERIAL STORAGE AREAS EXPOSED TO PRECIPITATION, STRUCTURAL CONTROL MEASURES, AND VEHICLE ENTRY AND EXIT AREAS AT LEAST ONCE EVERY 14 CALENDAR DAYS AND WITHIN 24 HOURS OF A STORM EVENT OF 0.5 INCHES OR GREATER.

15. CONTRACTOR SHALL INSPECT STABILIZED AREAS AND AREAS WHERE RUNOFF IS UNLIKELY DUE TO FROZEN OR ARID WEATHER CONDITIONS AT LEAST ONCE PER MONTH.

16. CONTRACTOR SHALL INSPECT ACCESSIBLE DISCHARGE LOCATIONS (OR NEARBY DOWNSTREAM LOCATIONS IF DISCHARGE POINT IS NOT ACCESSIBLE) IN ORDER TO ASCERTAIN WHETHER OR NOT EROSION CONTROL MEASURES ARE EFFECTIVE IN PREVENTING SIGNIFICANT IMPACTS TO RECEIVING WATERS.

17. STRUCTURAL BMP'S SHOULD NOT, TO THE DEGREE ATTAINABLE, BE PLACED WITHIN FLOODPLAINS.

18. BASED ON INSPECTION RESULTS, REVISIONS TO SWPPP MUST BE MADE WITHIN 7 CALENDAR DAYS OF THE INSPECTION. NEW OR MODIFIED CONTROL MEASURES MUST BE INSTALLED PRIOR TO THE NEXT RAINFALL EVENT, OR AS SOON AS PRACTICABLE.

19. REPORTS SUMMARIZING THE SCOPE OF ALL INSPECTIONS, INCLUDING NAME AND QUALIFICATIONS OF INSPECTOR, DATE OF INSPECTION, AND MAJOR OBSERVATIONS RELATING TO THE IMPLEMENTATION OF THE SWPPP (INCLUDING LOCATION OF DISCHARGES OF SEDIMENT OR OTHER POLLUTANTS, LOCATION OF CONTROLS THAT NEED TO BE MAINTAINED, LOCATIONS WHERE CONTROLS ARE INADEQUATE OR ARE OPERATING IMPROPERLY, AND LOCATIONS WHERE ADDITIONAL CONTROLS ARE NEEDED) MUST BE SIGNED BY THE INSPECTOR PER 30 TEXAS ADMINISTRATIVE CODE (TAC) SECTION 305.128, AND RETAINED WITHIN THE SWPPP FOR AT LEAST 3 YEARS FROM THE DATE THE SITE IS FINALLY STABILIZED. REPORTS THAT DO NOT IDENTIFY INCIDENTS OF NON-COMPLIANCE SHALL CONTAIN A CERTIFICATION STATING THAT THE SITE IS IN COMPLIANCE WITH THE SWPPP AND THE GENERAL PERMIT. THE CONTRACTOR SHALL CERTIFY AS FOLLOWS:

"I CERTIFY UNDER PENALTY OF LAW THAT THIS DOCUMENT AND ALL ATTACHMENTS WERE PREPARED UNDER MY DIRECTION OR SUPERVISION IN ACCORDANCE WITH A SYSTEM DESIGNED TO ASSURE THAT QUALIFIED PERSONNEL PROPERLY GATHERED AND EVALUATED THE INFORMATION SUBMITTED. BASED ON MY INQUIRY OF THE PERSON OR PERSONS WHO MANAGE THE SYSTEM, OR THOSE PERSONS DIRECTLY RESPONSIBLE FOR GATHERING THE INFORMATION, THE INFORMATION SUBMITTED IS, TO THE BEST OF MY KNOWLEDGE AND BELIEF, TRUE, ACCURATE, AND COMPLETE. I AM AWARE THAT THERE ARE SIGNIFICANT PENALTIES FOR SUBMITTING FALSE INFORMATION, INCLUDING THE POSSIBILITY OF FINE AND IMPRISONMENT FOR KNOWING VIOLATIONS."

20. CONTRACTOR SHALL IDENTIFY ALL SOURCES OF ALLOWABLE NON-STORM WATER THAT WILL BE COMBINED WITH STORM WATER AT THE SITE (EXCEPT FIRE-FIGHTING ACTIVITIES) AND ENSURE IMPLEMENTATION OF APPROPRIATE POLLUTION PREVENTION MEASURES FOR NON-STORM WATER COMPONENT(S) OF DISCHARGE.

21. CONTRACTOR SHALL ENSURE THAT THE INDIVIDUAL SIGNING THE SWPPP MAKES THE CERTIFICATION UNDER PART VI.G.2.d OF THE GENERAL PERMIT. THIS CERTIFICATION MUST APPEAR WITHIN THE SWPPP.

"I CERTIFY UNDER PENALTY OF LAW THAT THIS DOCUMENT AND ALL ATTACHMENTS WERE PREPARED UNDER MY DIRECTION OR SUPERVISION IN ACCORDANCE WITH A SYSTEM DESIGNED TO ASSURE THAT QUALIFIED PERSONNEL PROPERLY GATHERED AND EVALUATED THE INFORMATION SUBMITTED. BASED ON MY INQUIRY OF THE PERSON OR PERSONS WHO MANAGE THE SYSTEM, OR THOSE PERSONS DIRECTLY RESPONSIBLE FOR GATHERING THE INFORMATION, THE INFORMATION SUBMITTED IS, TO THE BEST OF MY KNOWLEDGE AND BELIEF, TRUE, ACCURATE, AND COMPLETE. I AM AWARE THAT THERE ARE SIGNIFICANT PENALTIES FOR SUBMITTING FALSE INFORMATION, INCLUDING THE POSSIBILITY OF FINE AND IMPRISONMENT FOR KNOWING VIOLATIONS."

CONTRACTOR ITEMS (SIGNATURE BLOCKS, ETC.)

1. CONTRACTOR MUST DESCRIBE BELOW ALL WASTE DISPOSAL PRACTICES AND ENSURE THAT NO SOLID MATERIALS INCLUDING BUILDING MATERIALS ARE DISCHARGED INTO WATERS OF THE UNITED STATES UNLESS AUTHORIZED BY PERMIT ISSUED UNDER CWA SECTION 402 AND 404.

WASTE DISPOSAL PRACTICES:

_____
_____
_____
_____
_____
_____

2. ALL CONTRACTORS AND SUBCONTRACTORS PROVIDING SERVICES RELATING TO THE SWPPP AND THE OWNER MUST SIGN A CERTIFICATION STATEMENT ACKNOWLEDGING THEIR RESPONSIBILITIES AS SPECIFIED IN THE SWPPP. CONTRACTOR, SUBCONTRACTOR, AND OWNER SHALL SIGN THE BELOW CERTIFICATE OR SHALL PREPARE SEPARATE CERTIFICATE OR STATEMENTS INCLUDING THE BELOW CERTIFICATION LANGUAGE.

CONTRACTOR SHALL ENSURE THE SWPPP IS SIGNED BY A RESPONSIBLE CORPORATE OFFICER (FOR A CORPORATION), GENERAL PARTNER OR PROPRIETOR (FOR PARTNERSHIP OF SOLE PROPRIETORSHIP), PRINCIPAL EXECUTIVE OFFICER OR RANKING ELECTED OFFICIAL (FOR MUNICIPALITY), OR BY A DULY AUTHORIZED REPRESENTATIVE OF THE ABOVE (EITHER A NAMED INDIVIDUAL OR ANY INDIVIDUAL OCCUPYING A NAMED POSITION). SIGNING INDIVIDUAL MUST INCLUDE THEIR TITLE AND QUALIFICATIONS ON THE SWPPP SIGNATURE BLOCK. THE SIGNED SWPPP MUST BE POSTED ON THE SITE PRIOR TO COMMENCING CONSTRUCTION.

"I CERTIFY THAT NO SOLID MATERIALS. INCLUDING BUILDING MATERIALS, ARE DISCHARGED INTO WATERS OF THE UNITED STATES".

"I CERTIFY UNDER PENALTY OF LAW THAT THIS DOCUMENT AND ALL ATTACHMENTS WERE PREPARED UNDER MY DIRECTION OR SUPERVISION IN ACCORDANCE WITH A SYSTEM DESIGNED TO ASSURE THAT QUALIFIED PERSONNEL PROPERLY GATHERED AND EVALUATED THE INFORMATION SUBMITTED. BASED ON MY INQUIRY OF THE PERSON OR PERSONS WHO MANAGE THE SYSTEM, OR THOSE PERSONS DIRECTLY RESPONSIBLE FOR GATHERING THE INFORMATION, THE INFORMATION SUBMITTED IS, TO THE BEST OF MY KNOWLEDGE AND BELIEF, TRUE, ACCURATE, AND COMPLETE. I AM AWARE THAT THERE ARE SIGNIFICANT PENALTIES FOR SUBMITTING FALSE INFORMATION, INCLUDING THE POSSIBILITY OF FINE AND IMPRISONMENT FOR KNOWING VIOLATIONS."

_____
_____
_____

3. STABILIZED CONSTRUCTION ENTRANCE(S) ARE INTENDED TO MINIMIZE OFF-SITE SEDIMENT TRACKING. CONTRACTOR TO INDICATE MEASURES TO MINIMIZE DUST GENERATION BELOW:

_____
_____
_____

4. CONTRACTOR MUST DESCRIBE CONSTRUCTION AND WASTE MATERIALS EXPECTED TO BE STORED ON-SITE AND MUST DISCUSS ALL CONTROLS IMPLEMENTED TO REDUCE POLLUTANTS FROM THESE MATERIALS, INCLUDING STORAGE PRACTICES AND SPILL PREVENTION AND RESPONSE MEASURES.

CURRENT LISTING OF CONSTRUCTION AND WASTE MATERIALS, AND CONTROLS IMPLEMENTED TO REDUCE POLLUTANTS (UPDATE AS NECESSARY):

_____
_____
_____
_____

"I CERTIFY THAT THE LISTING ABOVE IS CURRENT AND MEETS THE REQUIREMENTS OF THE REGION 6 NPDES CONSTRUCTION GENERAL PERMIT, SECTION IV.D.2c.(4)

_____

5. CONTRACTOR MUST DESCRIBE CONTROLS AND MEASURES TO MINIMIZE POLLUTANT DISCHARGES FROM AREAS OTHER THAN CONSTRUCTION, INCLUDING DEDICATED ASPHALT AND CONCRETE PLANTS. STORM WATER DISCHARGE ASSOCIATED WITH INDUSTRIAL ACTIVITIES, OTHER THAN CONSTRUCTION ACTIVITIES, ARE NOT ANTICIPATED ON THIS SITE.

LISTING OF CONTROLS AND MEASURES FROM AREAS OTHER THAN CONSTRUCTION:

_____
_____
_____

"I CERTIFY UNDER PENALTY OF LAW THAT THIS DOCUMENT AND ALL ATTACHMENTS WERE PREPARED UNDER MY DIRECTION OR SUPERVISION IN ACCORDANCE WITH A SYSTEM DESIGNED TO ASSURE THAT QUALIFIED PERSONNEL PROPERLY GATHERED AND EVALUATED THE INFORMATION SUBMITTED. BASED ON MY INQUIRY OF THE PERSON OR PERSONS WHO MANAGE THE SYSTEM, OR THOSE PERSONS DIRECTLY RESPONSIBLE FOR GATHERING THE INFORMATION, THE INFORMATION SUBMITTED IS, TO THE BEST OF MY KNOWLEDGE AND BELIEF, TRUE, ACCURATE, AND COMPLETE. I AM AWARE THAT THERE ARE SIGNIFICANT PENALTIES FOR SUBMITTING FALSE INFORMATION, INCLUDING THE POSSIBILITY OF FINE AND IMPRISONMENT FOR KNOWING VIOLATIONS."

_____

6. CONTRACTOR SHALL DESCRIBE AND RECORD AND DOCUMENT BELOW OR IN A SEPARATE LOG, OR ON THE SITE MAP. THE GENERAL SEQUENCE OF THE SOIL DISTURBING ACTIVITIES ON THE SITE AND THE DATES WHEN STABILIZATION MEASURES ARE INITIATED. THE SEPARATE LOG IS INCLUDED AS PART OF THE SWPPP. SEPARATE DOCUMENTATION, IF USED, SHALL INCLUDE THE BELOW CERTIFICATION LANGUAGE.

_____
_____
_____
_____
_____
_____

"I CERTIFY UNDER PENALTY OF LAW THAT THIS DOCUMENT AND ALL ATTACHMENTS WERE PREPARED UNDER MY DIRECTION OR SUPERVISION IN ACCORDANCE WITH A SYSTEM DESIGNED TO ASSURE THAT QUALIFIED PERSONNEL PROPERLY GATHERED AND EVALUATED THE INFORMATION SUBMITTED. BASED ON MY INQUIRY OF THE PERSON OR PERSONS WHO MANAGE THE SYSTEM, OR THOSE PERSONS DIRECTLY RESPONSIBLE FOR GATHERING THE INFORMATION, THE INFORMATION SUBMITTED IS, TO THE BEST OF MY KNOWLEDGE AND BELIEF, TRUE, ACCURATE, AND COMPLETE. I AM AWARE THAT THERE ARE SIGNIFICANT PENALTIES FOR SUBMITTING FALSE INFORMATION, INCLUDING THE POSSIBILITY OF FINE AND IMPRISONMENT FOR KNOWING VIOLATIONS."

SILT FENCE GENERAL NOTES

1. STEEL POSTS WHICH SUPPORT THE SILT FENCE SHALL BE INSTALLED ON A SLIGHT ANGLE TOWARD THE ANTICIPATED RUNOFF SOURCE. POST MUST BE EMBEDDED A MINIMUM OF ONE FOOT.
2. THE TOE OF THE SILT FENCE SHALL BE TRENCHED IN WITH A SPADE OR MECHANICAL TRENCHER, SO THAT THE DOWNSLOPE FACE OF THE TRENCH IS FLAT AND PERPENDICULAR TO THE LINE OF FLOW. WHERE FENCE CANNOT BE TRENCHED IN (e.g. PAVEMENT), WEIGHT FABRIC FLAP WITH ROCK ON UPHILL SIDE TO PREVENT FLOW FROM SEEPING UNDER FENCE.
3. THE TRENCH MUST BE A MINIMUM OF 6 INCHES DEEP AND 6 INCHES WIDE TO ALLOW FOR THE SILT FENCE FABRIC TO BE LAID IN THE GROUND AND BACKFILLED WITH COMPACTED MATERIAL.
4. SILT FENCE SHOULD BE SECURELY FASTENED TO EACH STEEL SUPPORT POST OR TO WOVEN WIRE BY USING WIRE TIES OR STAPLES SPACED EVERY 24" AT TOP AND MID SECTION, WHICH IN TURN IS ATTACHED TO THE STEEL FENCE POST. THERE SHALL BE A 3 FOOT OVERLAP, SECURELY FASTENED WHERE ENDS OF FABRIC MEET.
5. INSPECTION SHALL BE MADE EVERY TWO WEEKS AND AFTER EACH 1/2" RAINFALL. REPAIR OR REPLACEMENT SHALL BE MADE PROMPTLY AS NEEDED.
6. SILT FENCE SHALL BE REMOVED WHEN THE SITE IS COMPLETELY STABILIZED SO AS NOT TO BLOCK OR IMPEDE STORM FLOW OR DRAINAGE.
7. ACCUMULATED SILT SHALL BE REMOVED WHEN IT REACHES A DEPTH OF HALF THE HEIGHT OF THE FENCE. THE SILT SHALL BE DISPOSED OF AT AN APPROVED SITE AND IN SUCH A MANNER AS TO NOT CONTRIBUTE TO ADDITIONAL SILTATION.

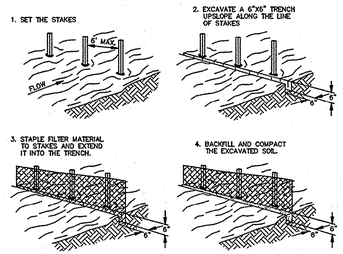

NOTE: SILT FENCE WITHOUT WIRE SUPPORT TO BE USED ONLY WHERE DISTANCE FROM HIGH POINT TO SILT FENCE IS LESS THAN 100 FEET.

SEDIMENTATION/SILT FENCE WITHOUT WIRE SUPPORT

N.T.S.

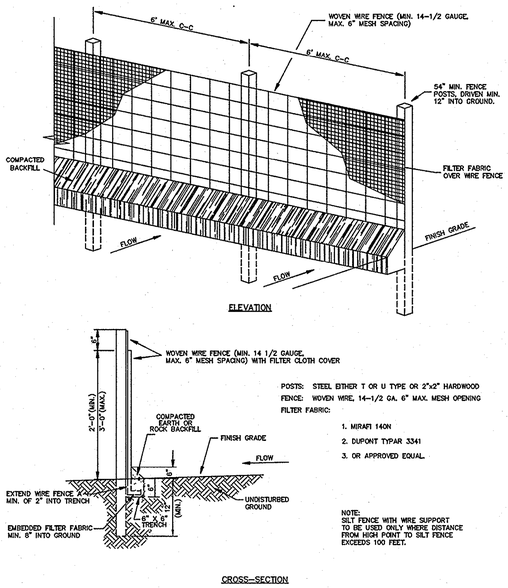

POSTS: STEEL EITHER T OR U TYPE OR 2"x2" HARDWOOD
FENCE: WOVEN WIRE, 14-1/2 GA. 6" MAX. MESH OPENING
FILTER FABRIC:

1. MIRAFI 140N
2. DUPONT TYPAR 3341
3. OR APPROVED EQUAL.

NOTE: SILT FENCE WITH WIRE SUPPORT TO BE USED ONLY WHERE DISTANCE FROM HIGH POINT TO SILT FENCE EXCEEDS 100 FEET.

SEDIMENTATION/SILT FENCE WITH WIRE SUPPORT

N.T.S.

VEGETATIVE STABILIZATION REQUIREMENTS

TEMPORARY SEEDING

ALL DISTURBED AREAS WHICH WILL BE LEFT DORMANT FOR GREATER THAN 14 DAYS SHALL BE SEEDED WITH FAST- GERMINATING TEMPORARY VEGETATION IMMEDIATELY FOLLOWING GRADING OPERATIONS. SELECTION OF THE SEED WILL DEPEND ON THE TIME OF YEAR IT IS APPLIED (SEE DESCRIPTIONS IN TABLE 2). REFERENCE LANDSCAPE PLAN FOR PERMANENT STABILIZATION REQUIREMENTS.

TABLE 2
VEGETATION TABLE*

TEMPORARY SEEDING

SPECIES	PLANTING RATE	PLANTING-DATES
CRIMSON CLOVER	7#/ACRE	8/15 - 11/30
MILLET, FOXTAIL	30#/ACRE	5/1 - 8/31
RYEGRASS, ANNUAL	30#/ACRE	8/15 - 9/30
SPRANGLETOP, GREEN	2.5#/ACRE	2/1 - 5/1
TALL FESCUE	7#-10#/1000 SF	9/1 - 10/15

*USE ONLY USDA CERTIFIED SEED.

SURFACE PREPARATION FOR TEMPORARY SEEDING

1. INSTALL EROSION STRUCTURES SUCH AS DIKES, DIVERSIONS, ETC. PRIOR TO SEEDING.

2. FURROW SLOPES STEEPER THAN 3:1 ON THE CONTOUR LINE BEFORE SEEDING.

3. ENSURE SEED BED IS PULVERIZED, LOOSE, AND UNIFORM.

APPLICATION

1. WHEN HYDROMULCHING IS USED, DO NOT MIX SEED AND FERTILIZER MORE THAN 30 MINUTES PRIOR TO APPLICATION.

2. APPLY SEED EVENLY USING PROPER EQUIPMENT AND WATER TO AID VEGETATION GROWTH.

3. EROSION CONTROL NETTING SHALL BE INSTALLED OVER FILL SLOPES WHICH HAVE BEEN BROUGHT TO FINAL GRADE AND HAVE BEEN SEEDED TO PROTECT AGAINST EROSION. MULCH (STRAW OR FIBER) SHALL BE USED ON RELATIVELY FLAT SLOPES.

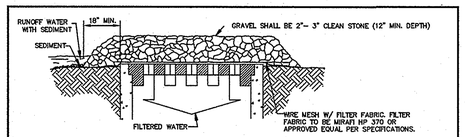

NOTE: THIS METHOD OF INLET PROTECTION IS APPLICABLE WHERE HEAVY CONCENTRATED FLOWS ARE EXPECTED, BUT NOT WHERE PONDING AROUND THE STRUCTURE MIGHT CAUSE EXCESSIVE INCONVENIENCE OR DAMAGE TO ADJACENT STRUCTURES AND UNPROTECTED ACRES.

GRAVEL AND WIRE MESH INLET SEDIMENT FILTER

N.T.S.

RECORD DRAWINGS (October 2013)
Information Provided By:
BOB MOORE CONSTRUCTION

STOP!
CALL BEFORE YOU DIG
DIG TESS
1-800-DIG-TESS
(at least 72 hours prior to digging)

REFER TO SHEET C-03 FOR EROSION CONTROL PLAN, GENERAL EROSION AND ADDITIONAL SEDIMENTATION CONTROL NOTES AND BMP MAINTENANCE NOTES.

No.	REVISIONS	DATE	BY

Kimley-Horn and Associates, Inc.
State of Texas Registration No. F-928
5750 GENESIS COURT, SUITE 200, FRISCO, TX 75034
PHONE: 972-335-3580 FAX: 972-335-3779
WWW.KIMLEY-HORN.COM

STATE OF TEXAS
ROY BRASWELL
104908
LICENSED PROFESSIONAL ENGINEER
9/21/12

KHA PROJECT 063319038
DATE 9/27/2012
SCALE AS SHOWN
DESIGNED BY TBB
DRAWN BY AAE
CHECKED BY TBB

VILLAGE ON THE PARKWAY
ADDISON, TEXAS

EROSION CONTROL DETAILS

SHEET NUMBER
C-04

PLOTTED BY MAURICIO, MARIA, 9/27/2012 8:51 AM
DWG NAME K:\FRI_CIV\063319038-VOPDWG\PLAN SET\C-04-EROSION CONTROL-DETAILS.DWG [C-04-EROSION CONTROL-DETAILS]
LAST SAVED 9/26/2012 1:39 PM
This document, together with the concepts and designs presented herein, as an instrument of service, is intended only for the specific purpose and client for which it was prepared. Reuse of and improper reliance on this document without written authorization and adaptation by Kimley-Horn and Associates, Inc. shall be without liability to Kimley-Horn and Associates, Inc.

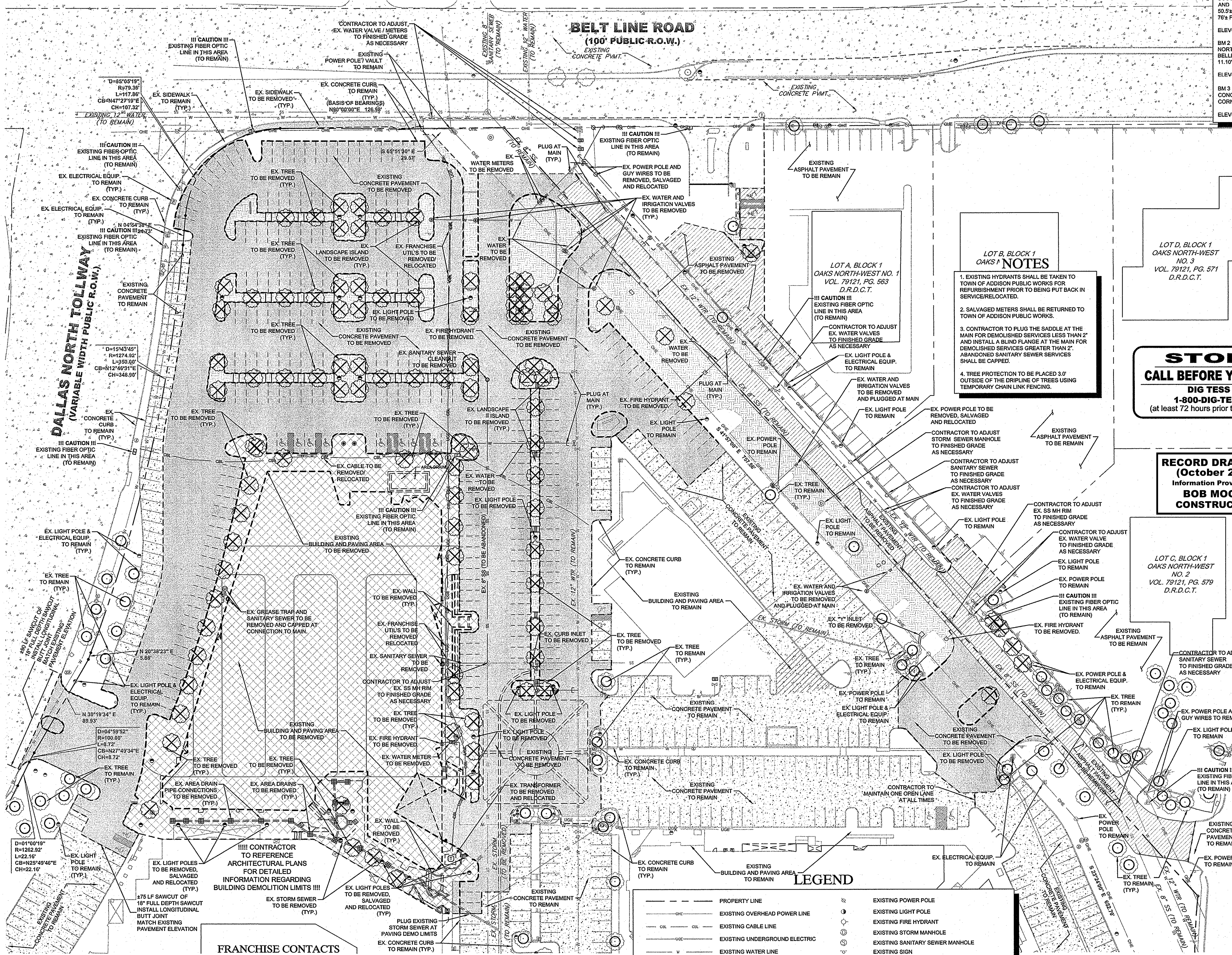

BENCHMARKS

BM 1 2" BRASS DISK STAMPED "TXDOT COA-5 GPS" 190'± SOUTH FROM THE INTERSECTION OF EDWIN LEWIS DRIVE AND QUORUM DRIVE; 2'± FROM WEST EDGE OF SIDEWALK, 50.5'± FROM THE WEST SIDE OF MEDIAN IN QUORUM DRIVE & 76'± FROM FIRE HYDRANT.

ELEV=630.10

BM 2 2" BRASS DISK STAMPED "TXDOT COA-10 GPS" AT THE NORTHWEST CORNER OF HAVENSHIRE PLACE AND BELLBROOK DRIVE; 21.80± FROM SANITARY SEWER MANHOLE, 11.10'± FROM STREET SIGN & 2.45± TO PC IN SIDEWALK.

ELEV=593.89

BM 3 CITY OF DALLAS WATER DEPT. BENCHMARK; "□" ON CONCRETE BASE OF 6' BRICK WALL AT THE NORTHEAST CORNER OF CELESTIAL ROAD AND MONTFORT DRIVE.

ELEV=626.81

N / W / E / S

0 40' 80'
GRAPHIC SCALE 40'

!!WARNING!!

EXISTING UTILITIES IN THE AREA. CONTRACTOR SHALL FIELD VERIFY THE LOCATION OF ALL EXISTING UTILITIES WITH THE PROVIDER PRIOR TO START OF CONSTRUCTION AND SHALL IMMEDIATELY NOTIFY THE ENGINEER OF ANY CONFLICTS DISCOVERED. CONTRACTOR IS RESPONSIBLE FOR COORDINATING UTILITY RELOCATION WHERE NECESSARY AND PROTECTING EXISTING UTILITIES (SHOWN OR NOT SHOWN). IF ANY EXISTING UTILITIES ARE DAMAGED, THE CONTRACTOR SHALL REPLACE THEM AT THEIR OWN EXPENSE.

NOTES

1. EXISTING HYDRANTS SHALL BE TAKEN TO TOWN OF ADDISON PUBLIC WORKS FOR REFURBISHMENT PRIOR TO BEING PUT BACK IN SERVICE/RELOCATED.
2. SALVAGED METERS SHALL BE RETURNED TO TOWN OF ADDISON PUBLIC WORKS.
3. CONTRACTOR TO PLUG THE SADDLE AT THE MAIN FOR DEMOLISHED SERVICES LESS THAN 2" AND INSTALL A BLIND FLANGE AT THE MAIN FOR DEMOLISHED SERVICES GREATER THAN 2". ABANDONED SANITARY SEWER SERVICES SHALL BE CAPPED.
4. TREE PROTECTION TO BE PLACED 3.0' OUTSIDE OF THE DRIPLINE OF TREES USING TEMPORARY CHAIN LINK FENCING.

STOP!
CALL BEFORE YOU DIG
DIG TESS
1-800-DIG-TESS
(at least 72 hours prior to digging)

RECORD DRAWINGS
(October 2013)
Information Provided By:
BOB MOORE CONSTRUCTION

NOTE

KIMLEY-HORN AND ASSOCIATES, INC. IS NOT RESPONSIBLE FOR THE MEANS AND METHODS EMPLOYED BY THE CONTRACTOR TO IMPLEMENT THIS DEMOLITION PLAN. THIS DEMOLITION PLAN SIMPLY INDICATES THE KNOWN OBJECTS ON THE SUBJECT TRACTS THAT ARE TO BE DEMOLISHED AND REMOVED FROM THE SITE. KIMLEY-HORN AND ASSOCIATES, INC. DOES NOT WARRANT OR REPRESENT THAT THE PLAN, WHICH WAS PREPARED BASED ON SURVEY AND UTILITY INFORMATION PROVIDED BY OTHERS, SHOWS ALL IMPROVEMENTS AND UTILITIES, AND THAT THE IMPROVEMENTS AND UTILITIES ARE SHOWN ACCURATELY. THE CONTRACTOR IS RESPONSIBLE FOR PERFORMING HIS OWN SITE RECONNAISSANCE TO SCOPE HIS WORK AND TO CONFIRM WITH THE OWNERS OF EXISTING IMPROVEMENTS AND UTILITIES THE ABILITY AND PROCESS FOR THE REMOVAL OF PROPOSED DEMOLITION. THE GOAL OF THE DEMOLITION IS TO LEAVE THE SITE IN A STATE SUITABLE FOR THE CONSTRUCTION OF THE PROPOSED IMPROVEMENTS. REMOVAL, RELOCATION, OR PRESERVATION OF EXISTING IMPROVEMENTS, UTILITIES, ETC. TO ACCOMPLISH THIS GOAL ARE THE RESPONSIBILITY OF THE CONTRACTOR.

CONTRACTOR SHALL COMPLY WITH ALL LOCAL, STATE, AND FEDERAL REGULATIONS REGARDING THE DEMOLITION OF OBJECTS ON THE SITE AND THE DISPOSAL OF THE DEMOLISHED MATERIALS OFF-SITE. IT IS THE CONTRACTOR'S SOLE RESPONSIBILITY TO REVIEW THE SITE, DETERMINE THE APPLICABLE REGULATIONS, RECEIVE THE REQUIRED PERMITS AND AUTHORIZATIONS, AND COMPLY.

DEMOLITION NOTES:

1. THE CONTRACTOR SHALL FIELD VERIFY AND LOCATE ALL EXISTING UTILITIES ON-SITE PRIOR TO DEMOLITION.
2. IT WILL BE THE RESPONSIBILITY OF THE CONTRACTOR TO OBTAIN ANY PERMITS AND PAY ANY FEES REQUIRED FOR DEMOLITION AND HAUL-OFF FROM THE APPROPRIATE AUTHORITIES.
3. THE CONTRACTOR SHALL PREPARE ALL DOCUMENTS AND ACQUIRE APPROPRIATE PERMITS AS REQUIRED PRIOR TO THE COMMENCEMENT OF DEMOLITION.
4. THE DEMOLITION PLAN IS INTENDED TO DEPICT GENERAL DEMOLITION AND UTILITY WORK. IT IS NOT INTENDED TO IDENTIFY EACH ELEMENT OF DEMOLITION OR RELOCATION. THE CONTRACTOR SHALL COORDINATE WITH THE OWNER AND APPROPRIATE UTILITY COMPANY PRIOR TO WORK.
5. CONTRACTOR TO COMPLETELY DEMOLISH AND DISPOSE OF OFF-SITE IN A LAWFUL MANNER EXISTING APPURTENANCES LOCATED ON AND AROUND THE PROPERTY INCLUDING BUT NOT LIMITED TO BOLLARDS, GAS METERS, AIR CONDITIONING UNITS, SIGNS, CURBS, SIDEWALKS, ELECTRIC METERS, FENCING, ETC.
6. REMOVE AND DISPOSE OF ANY SIDEWALK, FENCES, STAIRS, WALLS, FOUNDATIONS, CONDUITS, LIGHT POLE BASES, DEBRIS AND RUBBISH REQUIRING REMOVAL FROM THE WORK AREA IN AN APPROVED LANDFILL.
7. REMOVE AND/OR PLUG EXISTING UTILITIES SUCH AS SANITARY SEWER, WATER, GAS, ELECTRIC, AND TELEPHONE AS SHOWN OR AS NEEDED. THE CONTRACTOR IS RESPONSIBLE FOR CONTACTING EACH UTILITY COMPANY TO COORDINATE REMOVAL OF ALL UTILITIES AND FOR DETERMINING HORIZONTAL AND VERTICAL LOCATIONS OF UTILITIES PRIOR TO COMMENCING WORK.
8. THE CONTRACTOR SHALL CUT AND PLUG, OR ARRANGE FOR THE APPROPRIATE UTILITY COMPANY TO CUT AND PLUG ALL SERVICE PIPING AT THE STREET LINE OR MAIN, AS REQUIRED, OR AS OTHERWISE NOTED. ALL SERVICES MAY NOT BE SHOWN ON THIS PLAN. THE CONTRACTOR SHALL INVESTIGATE THE SITE PRIOR TO BIDDING TO DETERMINE THE EXTENT OF SERVICE PIPING TO BE REMOVED, CUT OR PLUGGED.
9. THE CONTRACTOR SHALL ARRANGE FOR THE RESETTING OF CURB BOXES AND/OR VALVE BOXES WITH THE APPROPRIATE UTILITY COMPANY.
10. INSTALL ALL EROSION AND SEDIMENT CONTROL DEVICES PRIOR TO BEGINNING DEMOLITION WORK.
11. THE CONTRACTOR IS RESPONSIBLE FOR THE PROTECTION OF ALL UTILITIES TO REMAIN IN PLACE.
12. THE CONTRACTOR SHALL TAKE ALL PRECAUTIONS TO AVOID UNNECESSARY DAMAGE TO EXISTING ROAD SURFACE.
13. FINISH SURFACE TO BE REMOVED OR DEMOLISHED SHALL BE CUT ALONG LINES OF JOINTS WHICH WILL PERMIT A NEAT SURFACE WHEN RESTORED.
14. ALL EXISTING ITEMS TO REMAIN WHICH ARE DAMAGED DURING CONSTRUCTION SHALL BE RESTORED TO ITS ORIGINAL CONDITION AT THE SOLE EXPENSE OF THE CONTRACTOR.
15. DO NOT INTERRUPT EXISTING UTILITIES SERVICING FACILITIES OCCUPIED AND USED BY THE OWNER OR OTHERS DURING OCCUPIED HOURS EXCEPT WHEN SUCH INTERRUPTIONS HAVE BEEN AUTHORIZED IN WRITING BY THE OWNER AND THE LOCAL MUNICIPALITIES. INTERRUPTIONS SHALL ONLY OCCUR AFTER ACCEPTABLE TEMPORARY SERVICE HAS BEEN PROVIDED.
16. SHOULD ANY UNCHARTED OR INCORRECTLY CHARTED EXISTING PIPING OR OTHER UTILITY BE UNCOVERED DURING EXCAVATION, CONTACT THE ENGINEER IMMEDIATELY FOR DIRECTIONS BEFORE PROCEEDING FURTHER WITH WORK IN THE AREA.

LEGEND

PROPERTY LINE	EXISTING POWER POLE
EXISTING OVERHEAD POWER LINE	EXISTING LIGHT POLE
EXISTING CABLE LINE	EXISTING FIRE HYDRANT
EXISTING UNDERGROUND ELECTRIC	EXISTING STORM MANHOLE
EXISTING WATER LINE	EXISTING SANITARY SEWER MANHOLE
EXISTING SANITARY SEWER LINE	EXISTING SIGN
EXISTING FIBER OPTIC EQUIP. / LINE	EXISTING LANDSCAPE AREA
TREE PROTECTION	EXISTING CONCRETE PAVING TO BE REMOVED
EXISTING TREE TO BE REMOVED	EXISTING ASPHALT PAVING TO BE REMOVED
EXISTING TREE TO REMAIN	EXISTING BUILDING AREA TO BE REMOVED

TREE PROTECTION NOTE

TREE PROTECTION NEEDS TO BE PLACED 3.0' OUTSIDE THE DRIP LINE OF TREES USING TEMPORARY CHAIN LINK FENCING.

FRANCHISE CONTACTS

AT&T	**ATMOS**
MARCUS NELSON	GARY DICKINSON
972-889-4109	972-360-4428
ONCOR	**TIME WARNER CABLE**
CHARLES THOMAS	DAVE CHENEY
817-355-7014	214-320-7406

This document, together with the concepts and designs presented herein, as an instrument of service, is intended only for the specific purpose and client for which it was prepared. Reuse of and improper reliance on this document without written authorization and adaptation by Kimley-Horn and Associates, Inc. shall be without liability to Kimley-Horn and Associates, Inc.

PLOTTED BY BRASWELL, TREY 9/27/2012 4:01 PM
DWG NAME K:\FRI_CIVIL\63319038-VOP\DWG\PLAN SET\C-05-DEMOLITION PLAN.DWG [C-05 DEMOLITION PLAN]
LAST SAVED 9/20/2012 4:26 PM

No.	REVISIONS	DATE	BY

Kimley-Horn and Associates, Inc.
State of Texas Registration No. F-928
5750 GENESIS COURT, SUITE 200, FRISCO, TX 75034
PHONE: 972-335-3580 FAX: 972-335-3779
WWW.KIMLEY-HORN.COM

STATE OF TEXAS ROY BRASWELL 104908 LICENSED PROFESSIONAL ENGINEER 9/27/12

KHA PROJECT	DATE	SCALE	DESIGNED BY	DRAWN BY	CHECKED BY
063319038	9/27/2012	AS SHOWN	TBB	AAE	TBB

VILLAGE ON THE PARKWAY
ADDISON, TEXAS

DEMOLITION PLAN

SHEET NUMBER
C-05

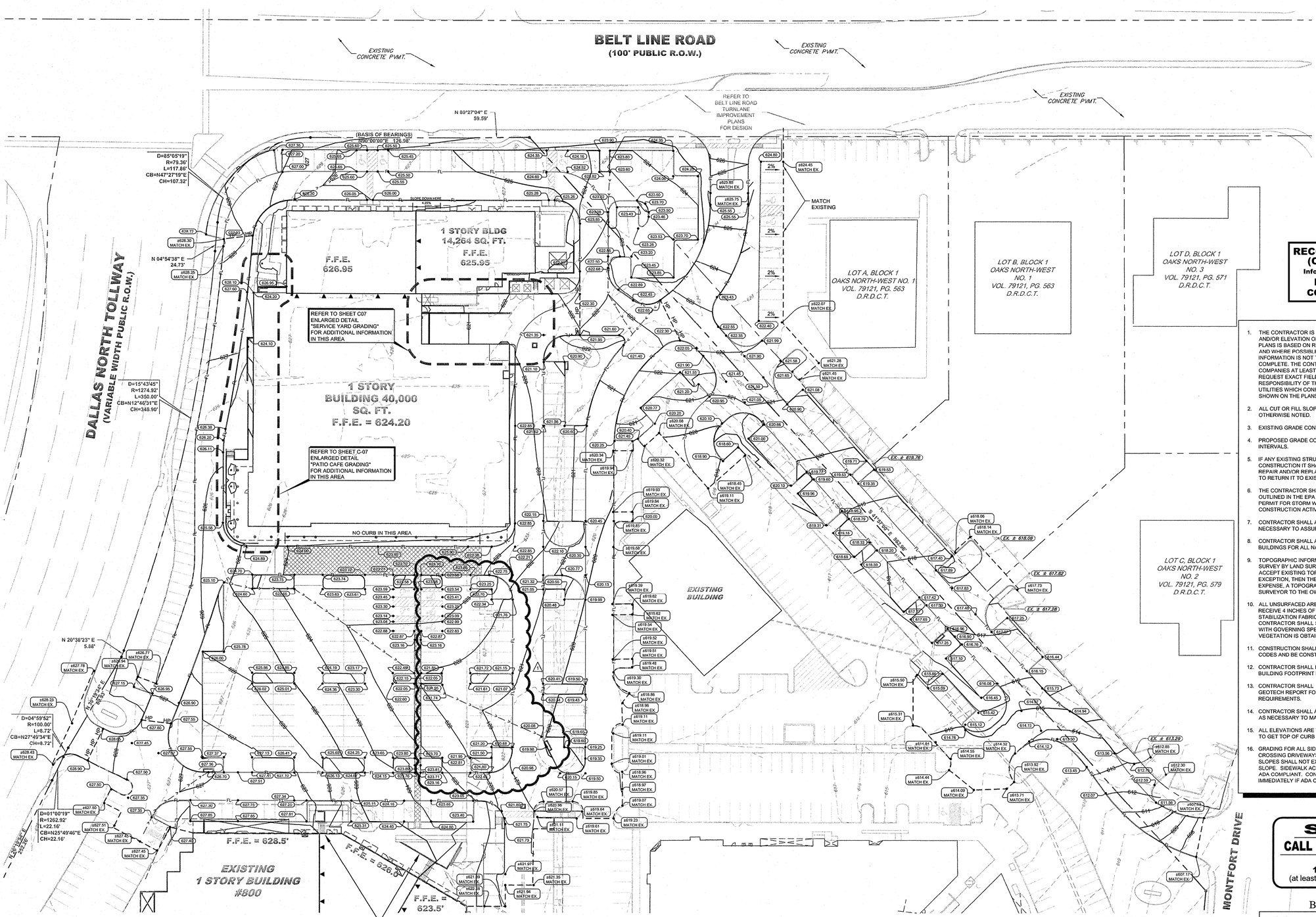

RECORD DRAWINGS (October 2013)
Information Provided By:
BOB MOORE CONSTRUCTION

NOTES

1. THE CONTRACTOR IS SPECIFICALLY CAUTIONED THAT THE LOCATION AND/OR ELEVATION OF EXISTING UTILITIES AS SHOWN ON THESE PLANS IS BASED ON RECORDS OF THE VARIOUS UTILITY COMPANIES, AND WHERE POSSIBLE, MEASUREMENTS TAKEN IN THE FIELD. THE INFORMATION IS NOT TO BE RELIED ON AS BEING EXACT OR COMPLETE. THE CONTRACTOR MUST CALL THE APPROPRIATE UTILITY COMPANIES AT LEAST 72 HOURS BEFORE ANY EXCAVATION TO REQUEST EXACT FIELD LOCATION OF UTILITIES. IT SHALL BE THE RESPONSIBILITY OF THE CONTRACTOR TO RELOCATE ALL EXISTING UTILITIES WHICH CONFLICT WITH THE PROPOSED IMPROVEMENTS SHOWN ON THE PLANS.
2. ALL CUT OR FILL SLOPES SHALL BE 4:1 OR FLATTER UNLESS OTHERWISE NOTED.
3. EXISTING GRADE CONTOUR INTERVALS SHOWN AT 1 FOOT.
4. PROPOSED GRADE CONTOUR INTERVALS SHOWN AT 1 FOOT INTERVALS.
5. IF ANY EXISTING STRUCTURES TO REMAIN ARE DAMAGED DURING CONSTRUCTION IT SHALL BE THE CONTRACTORS RESPONSIBILITY TO REPAIR AND/OR REPLACE THE EXISTING STRUCTURE AS NECESSARY TO RETURN IT TO EXISTING CONDITIONS OR BETTER.
6. THE CONTRACTOR SHALL ADHERE TO ALL TERMS & CONDITIONS AS OUTLINED IN THE EPA OR APPLICABLE STATE GENERAL N.P.D.E.S. PERMIT FOR STORM WATER DISCHARGE ASSOCIATED WITH CONSTRUCTION ACTIVITIES.
7. CONTRACTOR SHALL ADJUST AND/OR CUT EXISTING PAVEMENT AS NECESSARY TO ASSURE A SMOOTH FIT AND CONTINUOUS GRADE.
8. CONTRACTOR SHALL ASSURE POSITIVE DRAINAGE AWAY FROM BUILDINGS FOR ALL NATURAL AND PAVED AREAS.
9. TOPOGRAPHIC INFORMATION IS TAKEN FROM A TOPOGRAPHIC SURVEY BY LAND SURVEYORS. IF THE CONTRACTOR DOES NOT ACCEPT EXISTING TOPOGRAPHY AS SHOWN ON THE PLANS, WITHOUT EXCEPTION, THEN THE CONTRACTOR SHALL SUPPLY, AT THEIR EXPENSE, A TOPOGRAPHIC SURVEY BY A REGISTERED LAND SURVEYOR TO THE OWNER FOR REVIEW.
10. ALL UNSURFACED AREAS DISTURBED BY GRADING OPERATION SHALL RECEIVE 4 INCHES OF TOPSOIL. CONTRACTOR SHALL APPLY STABILIZATION FABRIC TO ALL SLOPES 4H:1V OR STEEPER. CONTRACTOR SHALL STABILIZE DISTURBED AREAS IN ACCORDANCE WITH GOVERNING SPECIFICATIONS UNTIL A HEALTHY STAND OF VEGETATION IS OBTAINED.
11. CONSTRUCTION SHALL COMPLY WITH ALL APPLICABLE GOVERNING CODES AND BE CONSTRUCTED TO SAME.
12. CONTRACTOR SHALL REFER TO ARCHITECTURAL PLANS FOR EXACT BUILDING FOOTPRINT DIMENSIONS.
13. CONTRACTOR SHALL REFER TO ARCHITECTURAL PLANS AND FINAL GEOTECH REPORT FOR BUILDING SUBGRADE PREPARATION REQUIREMENTS.
14. CONTRACTOR SHALL ADJUST EXISTING VALVES, MANHOLE RIMS, ETC. AS NECESSARY TO MATCH FINISHED GRADE.
15. ALL ELEVATIONS ARE TOP OF PAVEMENT UNLESS NOTED OTHERWISE. TO GET TOP OF CURB ELEVATIONS ADD 6" TO THE ELEVATION SHOWN.
16. GRADING FOR ALL SIDEWALKS AND ACCESSIBLE ROUTES INCLUDING CROSSING DRIVEWAYS SHALL CONFORM TO ADA STANDARDS. SLOPES SHALL NOT EXCEED 5% LONGITUDINAL SLOPE OR 2% CROSS SLOPE. SIDEWALK ACCESS TO EXTERNAL BUILDING DOORS SHALL BE ADA COMPLIANT. CONTRACTOR SHALL NOTIFY ENGINEER IMMEDIATELY IF ADA CRITERIA CANNOT BE MET AT ANY LOCATION.

STOP!
CALL BEFORE YOU DIG
DIG TESS
1-800-DIG-TESS
(at least 72 hours prior to digging)

BENCHMARKS

BM 1 2" BRASS DISK STAMPED "TXDOT COA-5 GPS" 190'± SOUTH FROM THE INTERSECTION OF EDWIN LEWIS DRIVE AND QUORUM DRIVE; 2'± FROM WEST EDGE OF SIDEWALK, 50.5'± FROM THE WEST SIDE OF MEDIAN IN QUORUM DRIVE & 76'± FROM FIRE HYDRANT.

ELEV=630.10

BM 2 2" BRASS DISK STAMPED "TXDOT COA-10 GPS" AT THE NORTHWEST CORNER OF HAVENSHIRE PLACE AND BELLBROOK DRIVE; 21.80± FROM SANITARY SEWER MANHOLE, 11.10'± FROM STREET SIGN & 2.45± TO PC IN SIDEWALK.

ELEV=593.89

BM 3 CITY OF DALLAS WATER DEPT. BENCHMARK; ON CONCRETE BASE OF 6" BRICK WALL AT THE NORTHEAST CORNER OF CELESTIAL ROAD AND MONTFORT DRIVE.

ELEV=626.81

!!WARNING!!

EXISTING UTILITIES IN THE AREA. CONTRACTOR SHALL FIELD VERIFY THE LOCATION OF ALL EXISTING UTILITIES WITH THE PROVIDER PRIOR TO START OF CONSTRUCTION AND SHALL IMMEDIATELY NOTIFY THE ENGINEER OF ANY CONFLICTS DISCOVERED. CONTRACTOR IS RESPONSIBLE FOR COORDINATING UTILITY RELOCATION WHERE NECESSARY AND PROTECTING EXISTING UTILITIES (SHOWN OR NOT SHOWN). IF ANY EXISTING UTILITIES ARE DAMAGED, THE CONTRACTOR SHALL REPLACE THEM AT THEIR OWN EXPENSE.

FLOODPLAIN NOTE

AS DETERMINED BY THE FLOOD INSURANCE RATE MAPS FOR DALLAS COUNTY, THE SUBJECT PROPERTY DOES NOT APPEAR TO LIE WITHIN A SPECIAL FLOOD HAZARD AREA (100 YEAR FLOOD), MAP DATE 08/23/01 COMMUNITY PANEL NO. 48113C0180 J, SUBJECT LOT IS LOCATED IN ZONE "X". IF THIS SITE IS NOT WITHIN AN IDENTIFIED FLOOD HAZARD AREA, THIS FLOOD STATEMENT DOES NOT IMPLY THAT THE PROPERTY AND/OR STRUCTURES THEREON WILL BE FREE FROM FLOODING OR FLOOD DAMAGE. ON RARE OCCASIONS, GREATER FLOODS CAN AND WILL OCCUR AND FLOOD HEIGHTS MAY BE INCREASED BY MAN-MADE OR NATURAL CAUSES. THIS FLOOD STATEMENT SHALL NOT CREATE LIABILITY ON THE PART OF THE SURVEYOR OR ENGINEER.

LEGEND

	EXISTING TREE TO REMAIN
693	PROPOSED CONTOURS
709	EXISTING CONTOURS
685.25	PROPOSED TOP OF PAVEMENT ELEVATION
EX 688.52	EXISTING SPOT ELEVATION
TOP 632.4	TOP OF INLET GRATE ELEVATION
	SWALE
HP	HIGH POINT
	MATCH EXISTING PAVEMENT

No.	REVISIONS	DATE	BY
1	UPDATED GRADING	10/5/1012	TBB

Kimley-Horn and Associates, Inc.
State of Texas Registration No. F-928
5750 GENESIS COURT, SUITE 200, FRISCO, TX 75034
PHONE: 972-335-3580 FAX: 972-335-3779
WWW.KIMLEY-HORN.COM

STATE OF TEXAS
ROY BRASWELL
104908
LICENSED
PROFESSIONAL ENGINEER
10/5/12

KHA PROJECT	063319038
DATE	9/27/2012
SCALE	AS SHOWN
DESIGNED BY	TBB
DRAWN BY	AAE
CHECKED BY	TBB

VILLAGE ON THE PARKWAY
ADDISON, TEXAS

GRADING PLAN

SHEET NUMBER
C-06

PLOTTED BY WHITE,SARAH BETH 10/5/2012 9:54 AM
DWG NAME K:\FRI_CIVIL\031918X-VOP\DWG\PLAN\SETC\C-06-GRADE.DWG [C-06 GRADING PLAN]
LAST SAVED 10/5/2012 9:54 AM
This document, together with the concepts and designs presented herein, as an instrument of service, is intended only for the specific purpose and client for which it was prepared. Reuse of and improper reliance on this document without written authorization and adaptation by Kimley-Horn and Associates, Inc. shall be without liability to Kimley-Horn and Associates, Inc.

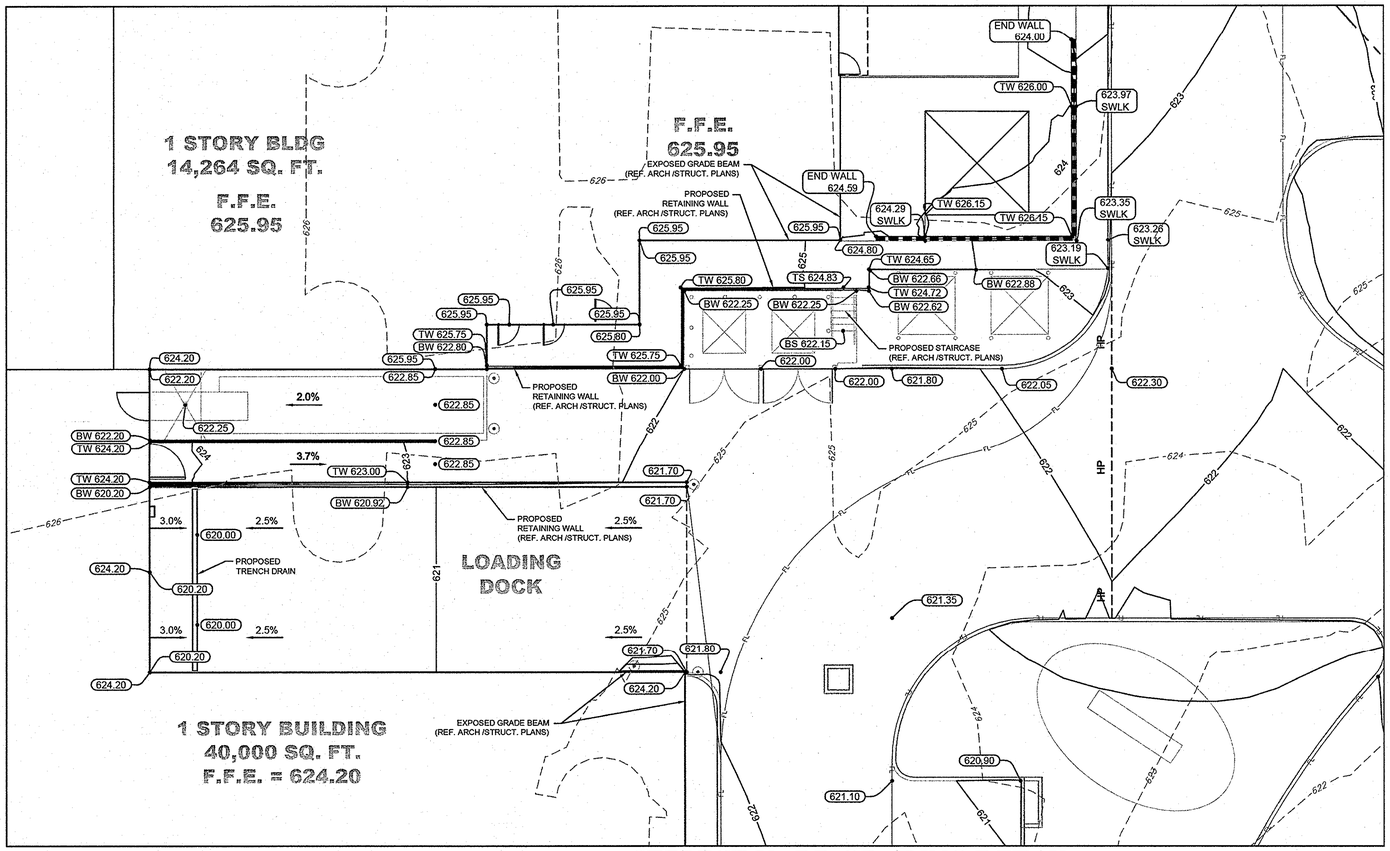

SERVICE YARD GRADING DETAIL

GRAPHIC SCALE 10'

!!WARNING!!

EXISTING UTILITIES IN THE AREA. CONTRACTOR SHALL FIELD VERIFY THE LOCATION OF ALL EXISTING UTILITIES WITH THE PROVIDER PRIOR TO START OF CONSTRUCTION AND SHALL IMMEDIATELY NOTIFY THE ENGINEER OF ANY CONFLICTS DISCOVERED. CONTRACTOR IS RESPONSIBLE FOR COORDINATING UTILITY RELOCATION WHERE NECESSARY AND PROTECTING EXISTING UTILITIES (SHOWN OR NOT SHOWN). IF ANY EXISTING UTILITIES ARE DAMAGED, THE CONTRACTOR SHALL REPLACE THEM AT THEIR OWN EXPENSE.

FLOODPLAIN NOTE

AS DETERMINED BY THE FLOOD INSURANCE RATE MAPS FOR DALLAS COUNTY, THE SUBJECT PROPERTY DOES NOT APPEAR TO LIE WITHIN A SPECIAL FLOOD HAZARD AREA (100 YEAR FLOOD), MAP DATE 08/23/01 COMMUNITY PANEL NO. 48113C0180 J, SUBJECT LOT IS LOCATED IN ZONE "X". IF THIS SITE IS NOT WITHIN AN IDENTIFIED FLOOD HAZARD AREA, THIS FLOOD STATEMENT DOES NOT IMPLY THAT THE PROPERTY AND/OR STRUCTURES THEREON WILL BE FREE FROM FLOODING OR FLOOD DAMAGE. ON RARE OCCASIONS, GREATER FLOODS CAN AND WILL OCCUR AND FLOOD HEIGHTS MAY BE INCREASED BY MAN-MADE OR NATURAL CAUSES. THIS FLOOD STATEMENT SHALL NOT CREATE LIABILITY ON THE PART OF THE SURVEYOR OR ENGINEER.

RECORD DRAWINGS
(October 2013)
Information Provided By:
BOB MOORE CONSTRUCTION

N
W E
S

LEGEND

	EXISTING TREE TO REMAIN
693	PROPOSED CONTOURS
709	EXISTING CONTOURS
635.25	PROPOSED TOP OF PAVEMENT ELEVATION
TC 635.25	PROPOSED TOP OF CURB ELEVATION
TW 635.25	PROPOSED TOP OF WALL ELEVATION
BW 635.25	PROPOSED BOTTOM OF WALL ELEVATION
TS 635.25	PROPOSED TOP OF STAIRS ELEVATION
BS 635.25	PROPOSED BOTTOM OF STAIRS ELEVATION
TG 635.25	PROPOSED TOP OF INLET GRATE ELEVATION
	SWALE
HP HP	HIGH POINT
	MATCH EXISTING PAVEMENT

NOTES

1. THE CONTRACTOR IS SPECIFICALLY CAUTIONED THAT THE LOCATION AND/OR ELEVATION OF EXISTING UTILITIES AS SHOWN ON THESE PLANS IS BASED ON RECORDS OF THE VARIOUS UTILITY COMPANIES, AND WHERE POSSIBLE, MEASUREMENTS TAKEN IN THE FIELD. THE INFORMATION IS NOT TO BE RELIED ON AS BEING EXACT OR COMPLETE. THE CONTRACTOR MUST CALL THE APPROPRIATE UTILITY COMPANIES AT LEAST 72 HOURS BEFORE ANY EXCAVATION TO REQUEST EXACT FIELD LOCATION OF UTILITIES. IT SHALL BE THE RESPONSIBILITY OF THE CONTRACTOR TO RELOCATE ALL EXISTING UTILITIES WHICH CONFLICT WITH THE PROPOSED IMPROVEMENTS SHOWN ON THE PLANS.
2. ALL CUT OR FILL SLOPES SHALL BE 4:1 OR FLATTER UNLESS OTHERWISE NOTED.
3. EXISTING GRADE CONTOUR INTERVALS SHOWN AT 1 FOOT.
4. PROPOSED GRADE CONTOUR INTERVALS SHOWN AT 1 FOOT INTERVALS.
5. IF ANY EXISTING STRUCTURES TO REMAIN ARE DAMAGED DURING CONSTRUCTION IT SHALL BE THE CONTRACTORS RESPONSIBILITY TO REPAIR AND/OR REPLACE THE EXISTING STRUCTURE AS NECESSARY TO RETURN IT TO EXISTING CONDITIONS OR BETTER.
6. THE CONTRACTOR SHALL ADHERE TO ALL TERMS & CONDITIONS AS OUTLINED IN THE EPA OR APPLICABLE STATE GENERAL N.P.D.E.S. PERMIT FOR STORM WATER DISCHARGE ASSOCIATED WITH CONSTRUCTION ACTIVITIES.
7. CONTRACTOR SHALL ADJUST AND/OR CUT EXISTING PAVEMENT AS NECESSARY TO ASSURE A SMOOTH FIT AND CONTINUOUS GRADE.
8. CONTRACTOR SHALL ASSURE POSITIVE DRAINAGE AWAY FROM BUILDINGS FOR ALL NATURAL AND PAVED AREAS.
9. TOPOGRAPHIC INFORMATION IS TAKEN FROM A TOPOGRAPHIC SURVEY BY LAND SURVEYORS. IF THE CONTRACTOR DOES NOT ACCEPT EXISTING TOPOGRAPHY AS SHOWN ON THE PLANS, WITHOUT EXCEPTION, THEN THE CONTRACTOR SHALL SUPPLY, AT THEIR EXPENSE, A TOPOGRAPHIC SURVEY BY A REGISTERED LAND SURVEYOR TO THE OWNER FOR REVIEW.
10. ALL UNSURFACED AREAS DISTURBED BY GRADING OPERATION SHALL RECEIVE 4 INCHES OF TOPSOIL. CONTRACTOR SHALL APPLY STABILIZATION FABRIC TO ALL SLOPES 4H:1V OR STEEPER. CONTRACTOR SHALL STABILIZE DISTURBED AREAS IN ACCORDANCE WITH GOVERNING SPECIFICATIONS UNTIL A HEALTHY STAND OF VEGETATION IS OBTAINED.
11. CONSTRUCTION SHALL COMPLY WITH ALL APPLICABLE GOVERNING CODES AND BE CONSTRUCTED TO SAME.
12. CONTRACTOR SHALL REFER TO ARCHITECTURAL PLANS FOR EXACT BUILDING FOOTPRINT DIMENSIONS.
13. CONTRACTOR SHALL REFER TO ARCHITECTURAL PLANS AND FINAL GEOTECH REPORT FOR BUILDING SUBGRADE PREPARATION REQUIREMENTS.
14. CONTRACTOR SHALL ADJUST EXISTING VALVES, MANHOLE RIMS, ETC. AS NECESSARY TO MATCH FINISHED GRADE.
15. ALL ELEVATIONS ARE TOP OF PAVEMENT UNLESS NOTED OTHERWISE. TO GET TOP OF CURB ELEVATIONS ADD 6" TO THE ELEVATION SHOWN.
16. GRADING FOR ALL SIDEWALKS AND ACCESSIBLE ROUTES INCLUDING CROSSING DRIVEWAYS SHALL CONFORM TO ADA STANDARDS. SLOPES SHALL NOT EXCEED 5% LONGITUDINAL SLOPE OR 2% CROSS SLOPE. SIDEWALK ACCESS TO EXTERNAL BUILDING DOORS SHALL BE ADA COMPLIANT. CONTRACTOR SHALL NOTIFY ENGINEER IMMEDIATELY IF ADA CRITERIA CANNOT BE MET AT ANY LOCATION.

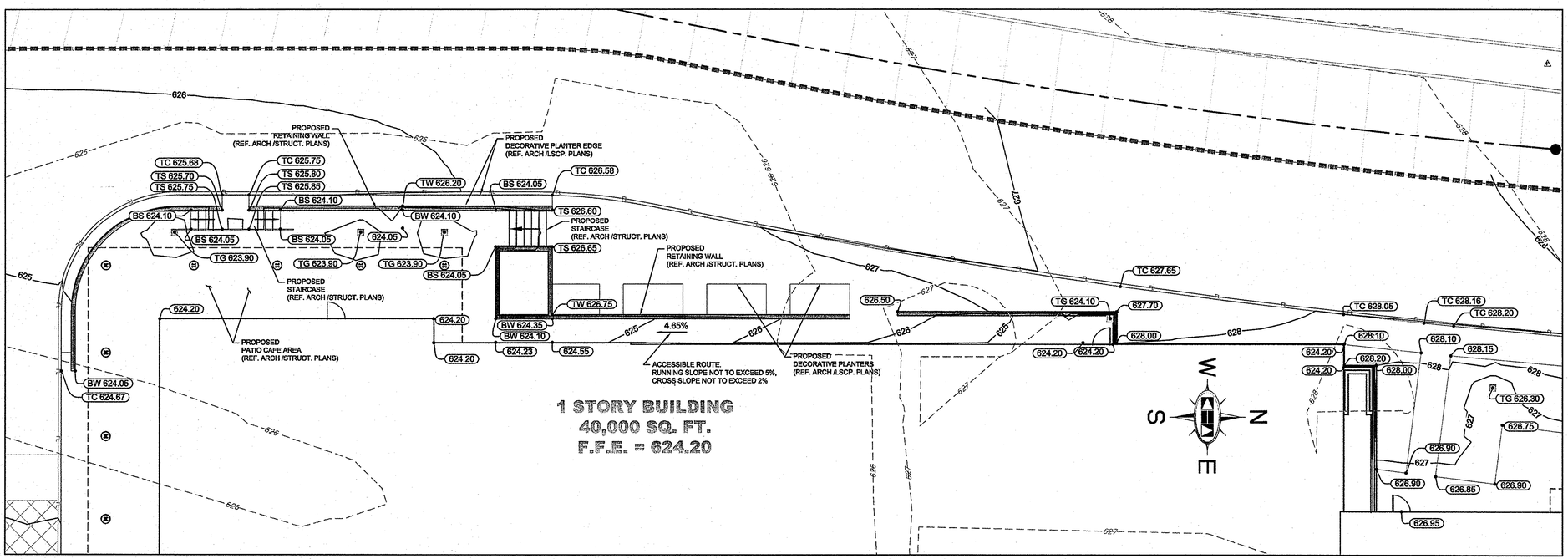

PATIO CAFE GRADING DETAIL

GRAPHIC SCALE 10'

STOP!
CALL BEFORE YOU DIG
DIG TESS
1-800-DIG-TESS
(at least 72 hours prior to digging)

BENCHMARKS

BM 1 2" BRASS DISK STAMPED "TXDOT COA-5 GPS" 190'± SOUTH FROM THE INTERSECTION OF EDWIN LEWIS DRIVE AND QUORUM DRIVE; 2'± FROM WEST EDGE OF SIDEWALK, 50.5'± FROM THE WEST SIDE OF MEDIAN IN QUORUM DRIVE & 76'± FROM FIRE HYDRANT.

ELEV=630.10

BM 2 2" BRASS DISK STAMPED "TXDOT COA-10 GPS" AT THE NORTHWEST CORNER OF HAVENSHIRE PLACE AND BELLBROOK DRIVE; 21.02± FROM SANITARY SEWER MANHOLE, 11.10'± FROM STREET SIGN & 2.45± TO PC IN SIDEWALK.

ELEV=593.89

BM 3 CITY OF DALLAS WATER DEPT. BENCHMARK; "□" ON CONCRETE BASE OF 6' BRICK WALL AT THE NORTHEAST CORNER OF CELESTIAL ROAD AND MONTFORT DRIVE.

ELEV=626.91

No.	REVISIONS	DATE	BY

Kimley-Horn and Associates, Inc.
State of Texas Registration No. F-928
5750 GENESIS COURT, SUITE 200, FRISCO, TX 75034
PHONE: 972-335-3580 FAX: 972-335-3779
WWW.KIMLEY-HORN.COM

STATE OF TEXAS
ROY BRASWELL
104908
LICENSED PROFESSIONAL ENGINEER
9/27/12

KHA PROJECT 063319038	
DATE 9/27/2012	
SCALE AS SHOWN	
DESIGNED BY TBB	
DRAWN BY AAE	
CHECKED BY TBB	

VILLAGE ON THE PARKWAY
ADDISON, TEXAS

DETAILED GRADING PLAN

SHEET NUMBER
C-07

This document, together with the concepts and designs presented herein, as an instrument of service, is intended only for the specific purpose and client for which it was prepared. Reuse of and improper reliance on this document without written authorization and adaptation by Kimley-Horn and Associates, Inc. shall be without liability to Kimley-Horn and Associates, Inc.

PLOTTED BY MAURICIO MARIA 9/27/2012 8:53 AM
DWG NAME K:\FRI_CIVIL\063319038\DWG\PLAN SET\C-07-DETAILED GRADE.DWG [C-07 DETAILED GRADING PLAN]
LAYOUT C07-DETAILED GRADE

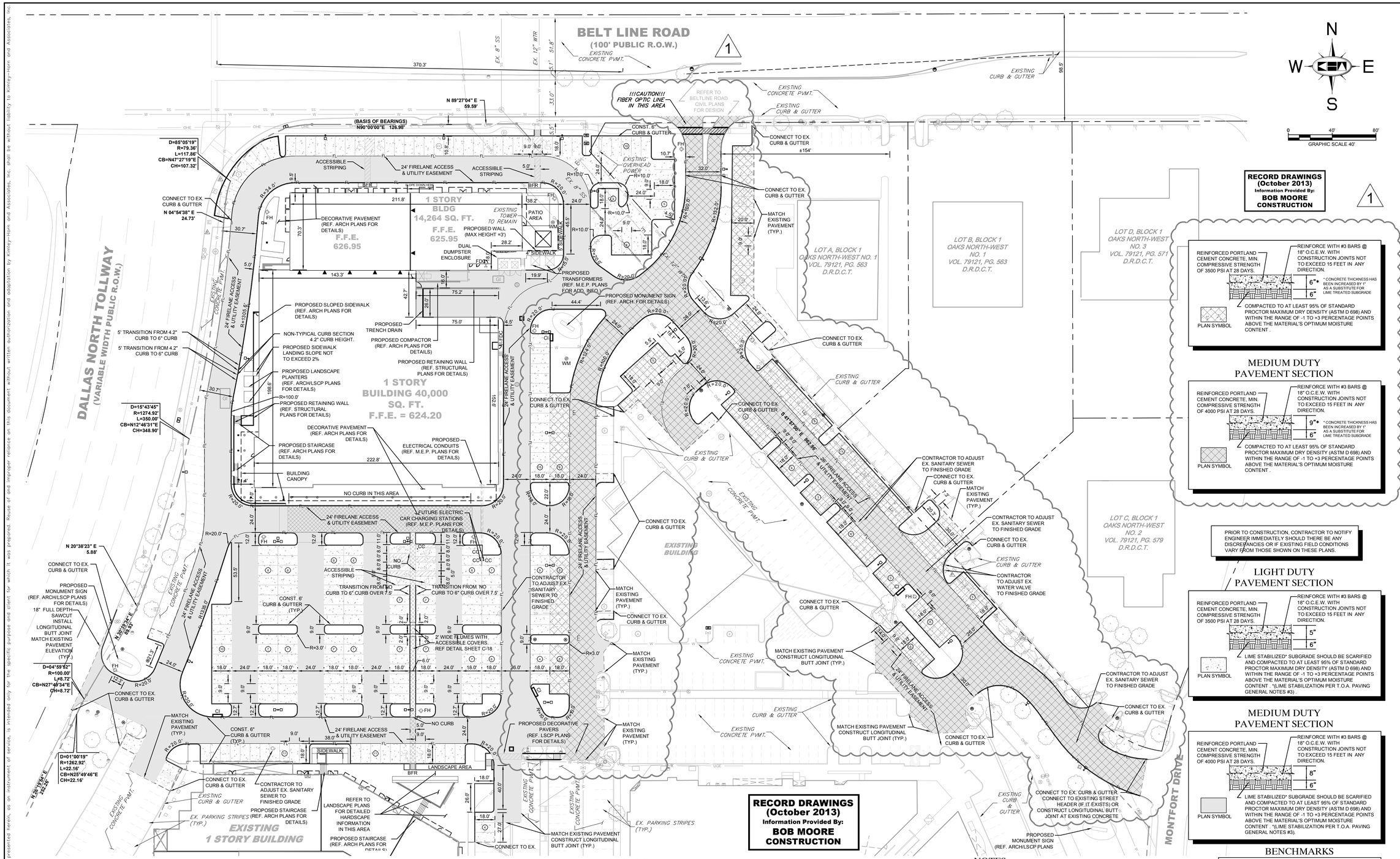

RECORD DRAWINGS (October 2013)
Information Provided By:
BOB MOORE CONSTRUCTION

PRIOR TO CONSTRUCTION, CONTRACTOR TO NOTIFY ENGINEER IMMEDIATELY SHOULD THERE BE ANY DISCREPANCIES OR IF EXISTING FIELD CONDITIONS VARY FROM THOSE SHOWN ON THESE PLANS.

MEDIUM DUTY PAVEMENT SECTION

REINFORCED PORTLAND CEMENT CONCRETE, MIN. COMPRESSIVE STRENGTH OF 3500 PSI AT 28 DAYS.
REINFORCE WITH #3 BARS @ 18" O.C.E.W. WITH CONSTRUCTION JOINTS NOT TO EXCEED 15 FEET IN ANY DIRECTION.
6"* / 6"
* CONCRETE THICKNESS HAS BEEN INCREASED BY 1" AS A SUBSTITUTE FOR LIME TREATED SUBGRADE
COMPACTED TO AT LEAST 95% OF STANDARD PROCTOR MAXIMUM DRY DENSITY (ASTM D 698) AND WITHIN THE RANGE OF -1 TO +3 PERCENTAGE POINTS ABOVE THE MATERIAL'S OPTIMUM MOISTURE CONTENT .
PLAN SYMBOL

MEDIUM DUTY PAVEMENT SECTION

REINFORCED PORTLAND CEMENT CONCRETE, MIN. COMPRESSIVE STRENGTH OF 4000 PSI AT 28 DAYS.
REINFORCE WITH #3 BARS @ 18" O.C.E.W. WITH CONSTRUCTION JOINTS NOT TO EXCEED 15 FEET IN ANY DIRECTION.
9"* / 6"
* CONCRETE THICKNESS HAS BEEN INCREASED BY 1" AS A SUBSTITUTE FOR LIME TREATED SUBGRADE
COMPACTED TO AT LEAST 95% OF STANDARD PROCTOR MAXIMUM DRY DENSITY (ASTM D 698) AND WITHIN THE RANGE OF -1 TO +3 PERCENTAGE POINTS ABOVE THE MATERIAL'S OPTIMUM MOISTURE CONTENT .
PLAN SYMBOL

LIGHT DUTY PAVEMENT SECTION

REINFORCED PORTLAND CEMENT CONCRETE, MIN. COMPRESSIVE STRENGTH OF 3500 PSI AT 28 DAYS.
REINFORCE WITH #3 BARS @ 18" O.C.E.W. WITH CONSTRUCTION JOINTS NOT TO EXCEED 15 FEET IN ANY DIRECTION.
5" / 6"
LIME STABILIZED* SUBGRADE SHOULD BE SCARIFIED AND COMPACTED TO AT LEAST 95% OF STANDARD PROCTOR MAXIMUM DRY DENSITY (ASTM D 698) AND WITHIN THE RANGE OF -1 TO +3 PERCENTAGE POINTS ABOVE THE MATERIAL'S OPTIMUM MOISTURE CONTENT . *LIME STABILIZATION PER T.O.A. PAVING GENERAL NOTES #3) .
PLAN SYMBOL

MEDIUM DUTY PAVEMENT SECTION

REINFORCED PORTLAND CEMENT CONCRETE, MIN. COMPRESSIVE STRENGTH OF 4000 PSI AT 28 DAYS.
REINFORCE WITH #3 BARS @ 18" O.C.E.W. WITH CONSTRUCTION JOINTS NOT TO EXCEED 15 FEET IN ANY DIRECTION.
8" / 6"
LIME STABILIZED* SUBGRADE SHOULD BE SCARIFIED AND COMPACTED TO AT LEAST 95% OF STANDARD PROCTOR MAXIMUM DRY DENSITY (ASTM D 698) AND WITHIN THE RANGE OF -1 TO +3 PERCENTAGE POINTS ABOVE THE MATERIAL'S OPTIMUM MOISTURE CONTENT . *LIME STABILIZATION PER T.O.A. PAVING GENERAL NOTES #3).
PLAN SYMBOL

RECORD DRAWINGS (October 2013)
Information Provided By:
BOB MOORE CONSTRUCTION

LEGEND

PROPERTY LINE	BARRIER FREE RAMP (BFR)
EXISTING OVERHEAD POWER LINE	PROPOSED LIGHT POLE
EXISTING CABLE LINE	EXISTING POWER POLE
EXISTING GAS LINE	EXISTING LIGHT POLE
EXISTING WATER LINE	EXISTING FIRE HYDRANT
EXISTING SANITARY SEWER LINE	EXISTING STORM MANHOLE
EXISTING UNDERGROUND COMM.	EXISTING SANITARY SEWER MANHOLE
	EXISTING SIGN
	EXISTING WATER VALVE

NOTES

1. ALL WORK AND MATERIALS SHALL COMPLY WITH ALL TOWN/COUNTY REGULATIONS AND CODES AND O.S.H.A. STANDARDS.
2. REFERENCE ARCHITECTURAL AND LANDSCAPE ARCHITECTURAL PLANS FOR DETAILED HARDSCAPE FEATURES (PAVERS, BENCHES, DECORATIVE PLANTERS ETC.)
3. REFERENCE ARCHITECTURAL PLANS FOR EXACT BUILDING FOOTPRINT DIMENSIONS.
4. CONTRACTOR SHALL REFER TO FINAL GEOTECH REPORT FOR SUBGRADE PREPARATION REQUIREMENTS.
5. ALL DIMENSIONS ARE FROM THE FACE OF CURB, FACE OF BUILDING, OR PROPERTY LINE UNLESS NOTED OTHERWISE.
6. CONTRACTOR SHALL ADJUST EXISTING VALVES, MANHOLE RIMS, ETC. AS NECESSARY TO MATCH FINISHED GRADE.
7. CONTRACTOR SHALL BE RESPONSIBLE FOR ALL RELOCATIONS, (UNLESS OTHERWISE NOTED ON PLANS) INCLUDING BUT NOT LIMITED TO, TREES, UTILITIES, STORM DRAINAGE, SIGNS, TRAFFIC SIGNALS & POLES, ETC. AS REQUIRED. ALL WORK SHALL BE IN ACCORDANCE WITH GOVERNING AUTHORITIES REQUIREMENTS AND PROJECT SITE WORK SPECIFICATIONS AND SHALL BE APPROVED BY SUCH. ALL COST SHALL BE INCLUDED IN BASE BID.
8. SITE BOUNDARY, TOPOGRAPHY, UTILITY AND ROAD INFORMATION TAKEN FROM A SURVEY PREPARED BY KIMLEY-HORN AND ASSOCIATES, INC.
9. LONGITUDINAL BUTT JOINTS SHALL BE INSTALLED WHERE NEW PAVEMENT ABUTS EXISTING CONCRETE.

BENCHMARKS

BM 1 2" BRASS DISK STAMPED "TXDOT COA-5 GPS" 190'± SOUTH FROM THE INTERSECTION OF EDWIN LEWIS DRIVE AND QUORUM DRIVE; 2'± FROM WEST EDGE OF SIDEWALK, 50.5'± FROM THE WEST SIDE OF MEDIAN IN QUORUM DRIVE & 76'± FROM FIRE HYDRANT.

ELEV=630.10

BM 2 2" BRASS DISK STAMPED "TXDOT COA-10 GPS" AT THE NORTHWEST CORNER OF HAVENSHIRE PLACE AND BELLBROOK DRIVE; 21.80± FROM SANITARY SEWER MANHOLE, 11.10'± FROM STREET SIGN & 2.45± TO PC IN SIDEWALK.

ELEV=593.89

BM 3 CITY OF DALLAS WATER DEPT. BENCHMARK; ON CONCRETE BASE OF 6' BRICK WALL AT THE NORTHEAST CORNER OF CELESTIAL ROAD AND MONTFORT DRIVE.

ELEV=626.81

!!WARNING!!

EXISTING UTILITIES IN THE AREA. CONTRACTOR SHALL FIELD VERIFY THE LOCATION OF ALL EXISTING UTILITIES WITH THE PROVIDER PRIOR TO START OF CONSTRUCTION AND SHALL IMMEDIATELY NOTIFY THE ENGINEER OF ANY CONFLICTS DISCOVERED. CONTRACTOR IS RESPONSIBLE FOR COORDINATING UTILITY RELOCATION WHERE NECESSARY AND PROTECTING EXISTING UTILITIES (SHOWN OR NOT SHOWN). IF ANY EXISTING UTILITIES ARE DAMAGED, THE CONTRACTOR SHALL REPLACE THEM AT THEIR OWN EXPENSE.

STOP!
CALL BEFORE YOU DIG
DIG TESS
1-800-DIG-TESS
(at least 72 hours prior to digging)

This document, together with the concepts and designs presented herein, as an instrument of service, is intended only for the specific purpose and client for which it was prepared. Reuse of and improper reliance on this document without written authorization and adaptation by Kimley-Horn and Associates, Inc. shall be without liability to Kimley-Horn and Associates, Inc.

PLOTTED BY FURGUSSON, CHRIS 5/6/2014 8:57 AM
DWG NAME K:\FRI_CIVIL\131903S-VOD\DWG\PLAN SET\C-08-PAVING-PLAN.DWG [C-08 PAVING & DIMENSION CONTROL PLAN]
LAST SAVED 12/11/2013 7:52 PM

No.	REVISIONS	DATE	BY
1	UPDATED SUBGRADE	12/11/2013	SBW

Kimley-Horn and Associates, Inc.
State of Texas Registration No. F-928
5750 GENESIS COURT, SUITE 200, FRISCO, TX 75034
PHONE: 972-335-3580 FAX: 972-335-3779
WWW.KIMLEY-HORN.COM

STATE OF TEXAS ROY BRASWELL 104908 LICENSED PROFESSIONAL ENGINEER

KHA PROJECT 063190.38
DATE 12/18/2013
SCALE AS SHOWN
DESIGNED BY TBB
DRAWN BY AAE
CHECKED BY TBB

VILLAGE ON THE PARKWAY
ADDISON, TEXAS

PAVING & DIMENSION CONTROL PLAN

SHEET NUMBER
C-08

This document, together with the concepts and designs presented herein, as an instrument of service, is intended only for the specific purpose and client for which it was prepared. Reuse of and improper reliance on this document without written authorization and adaptation by Kimley-Horn and Associates, Inc. shall be without liability to Kimley-Horn and Associates, Inc.

PLOTTED BY MAURICIO, MARLA 9/27/2012 8:54 AM
DWG NAME K:\FRI_CIV\143190\8-VCD\DWG\PLAN SET\C-09-DAM-EXIST.DWG [C-09 EXISTING CONDITIONS DRAINAGE AREA MAP]
LAST SAVED 9/26/2012 1:45 PM

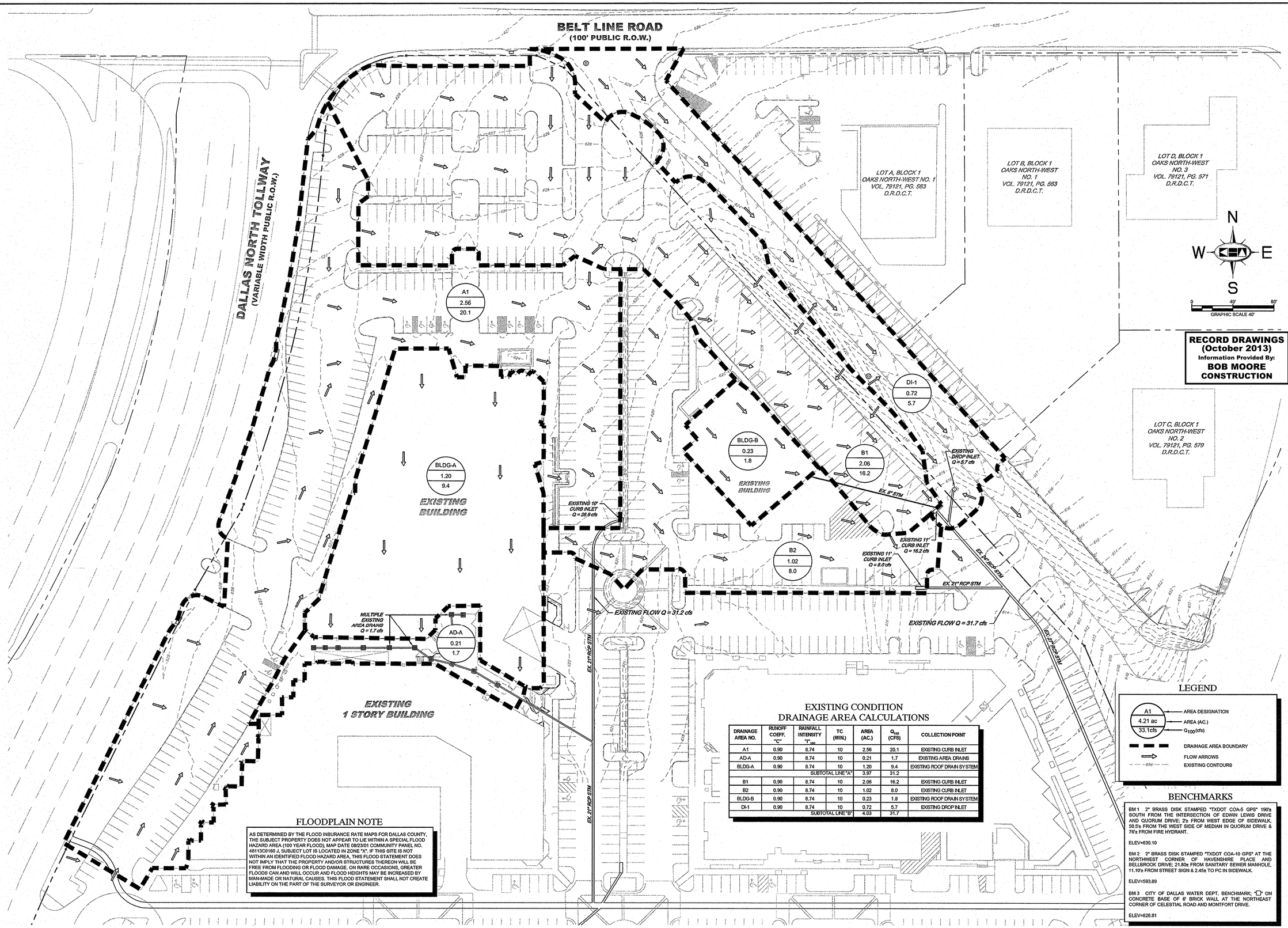

EXISTING CONDITION DRAINAGE AREA CALCULATIONS

DRAINAGE AREA NO.	RUNOFF COEFF. "C"	RAINFALL INTENSITY "I"$_{100}$	TC (MIN)	AREA (AC.)	Q_{100} (CFS)	COLLECTION POINT
A1	0.90	8.74	10	2.56	20.1	EXISTING CURB INLET
AD-A	0.90	8.74	10	0.21	1.7	EXISTING AREA DRAINS
BLDG-A	0.90	8.74	10	1.20	9.4	EXISTING ROOF DRAIN SYSTEM
			SUBTOTAL LINE "A"	3.97	31.2	
B1	0.90	8.74	10	2.06	16.2	EXISTING CURB INLET
B2	0.90	8.74	10	1.02	8.0	EXISTING CURB INLET
BLDG-B	0.90	8.74	10	0.23	1.8	EXISTING ROOF DRAIN SYSTEM
DI-1	0.90	8.74	10	0.72	5.7	EXISTING DROP INLET
			SUBTOTAL LINE "B"	4.03	31.7	

FLOODPLAIN NOTE

AS DETERMINED BY THE FLOOD INSURANCE RATE MAPS FOR DALLAS COUNTY, THE SUBJECT PROPERTY DOES NOT APPEAR TO LIE WITHIN A SPECIAL FLOOD HAZARD AREA, (100 YEAR FLOOD). MAP DATE 08/23/01 COMMUNITY PANEL NO. 48113C0180 J, SUBJECT LOT IS LOCATED IN ZONE "X". IF THIS SITE IS NOT WITHIN AN IDENTIFIED FLOOD HAZARD AREA, THIS FLOOD STATEMENT DOES NOT IMPLY THAT THE PROPERTY AND/OR STRUCTURES THEREON WILL BE FREE FROM FLOODING OR FLOOD DAMAGE. ON RARE OCCASIONS, GREATER FLOODS CAN AND WILL OCCUR AND FLOOD HEIGHTS MAY BE INCREASED BY MAN-MADE OR NATURAL CAUSES. THIS FLOOD STATEMENT SHALL NOT CREATE LIABILITY ON THE PART OF THE SURVEYOR OR ENGINEER.

LEGEND

A1	AREA DESIGNATION
4.21 ac	AREA (AC.)
33.1cfs	Q_{100} (cfs)
	DRAINAGE AREA BOUNDARY
	FLOW ARROWS
628	EXISTING CONTOURS

BENCHMARKS

BM 1 2" BRASS DISK STAMPED "TXDOT COA-5 GPS" 190'± SOUTH FROM THE INTERSECTION OF EDWIN LEWIS DRIVE AND QUORUM DRIVE; 2'± FROM WEST EDGE OF SIDEWALK, 50.5'± FROM THE WEST SIDE OF MEDIAN IN QUORUM DRIVE & 76'± FROM FIRE HYDRANT.

ELEV=630.10

BM 2 2" BRASS DISK STAMPED "TXDOT COA-10 GPS" AT THE NORTHWEST CORNER OF HAVENSHIRE PLACE AND BELLBROOK DRIVE; 21.80± FROM SANITARY SEWER MANHOLE, 11.10'± FROM STREET SIGN & 2.45± TO PC IN SIDEWALK.

ELEV=593.89

BM 3 CITY OF DALLAS WATER DEPT. BENCHMARK; "□" ON CONCRETE BASE OF 6' BRICK WALL AT THE NORTHEAST CORNER OF CELESTIAL ROAD AND MONTFORT DRIVE.

ELEV=626.81

No.	REVISIONS	DATE	BY

RECORD DRAWINGS (October 2013)
Information Provided By:
BOB MOORE CONSTRUCTION

Kimley-Horn and Associates, Inc.
State of Texas Registration No. F-928
5750 GENESIS COURT, SUITE 200, FRISCO, TX 75034
PHONE: 972-335-3580 FAX: 972-335-3779
WWW.KIMLEY-HORN.COM

STATE OF TEXAS
ROY BRASWELL
104908
LICENSED
PROFESSIONAL ENGINEER
9/27/12

KHA PROJECT 063319038
DATE 9/27/2012
SCALE AS SHOWN
DESIGNED BY TBB
DRAWN BY AAE
CHECKED BY TBB

VILLAGE ON THE PARKWAY
ADDISON, TEXAS

EXISTING CONDITIONS DRAINAGE AREA MAP

SHEET NUMBER
C-09

DETENTION SYSTEM CALCULATIONS
MODIFIED RATIONAL METHOD

DESIGN FREQUENCY =	100	YEAR STORM

ALLOWABLE RELEASE RATE (EXISTING CONDITIONS):

DRAINAGE AREA (A)	8.00	AC
TIME OF CONC. (T_c)	10	MIN
RAINFALL INTENSITY (I)	9.27	IN/HR
RUNOFF COEFFICIENT (C)	0.90	
ALLOW. SITE DISCHARGE	66.74	CFS

PROPOSED CONDITIONS:

ON-SITE DETAINED RUNOFF:			OFF-SITE PASS THROUGH FLOW:		
DRAINAGE AREA (A)	8.25	AC	DRAINAGE AREA (A)	0.00	AC
TIME OF CONC. (T_c)	10	MIN	TIME OF CONC. (T_c)	10	MIN
RAINFALL INTENSITY (I)	9.27	IN/HR	RAINFALL INTENSITY (I)	9.27	IN/HR
RUNOFF COEFFICIENT (C)	0.90		RUNOFF COEFFICIENT (C)	0.90	
DETAINED RUNOFF	37.7	CFS	OFF-SITE PASS THROUGH FLOW	0.00	CFS

ON-SITE UNDETAINED RUNOFF:					
DRAINAGE AREA (A)	0.00	AC			
TIME OF CONC. (T_c)	10	MIN			
RAINFALL INTENSITY (I)	9.27	IN/HR	ALLOWABLE DISCHARGE	21.60	CFS
RUNOFF COEFFICIENT (C)	0.90				
UNDETAINED RUNOFF	0.0	CFS	ACTUAL DISCHARGE		CFS

STORAGE CALCULATIONS:

DURATION		RAINFALL INTENSITY	INFLOW RATE	INFLOW VOLUME	OUTFLOW RATE	OUTFLOW VOLUME	REQUIRED STORAGE (INFLOW - OUTFLOW)	
(MIN)	(HRS)	(IN/HR)	(CFS)	(CF)	(CFS)	(CF)	(CF)	(AC-FT)
5	0.08	11.17	82.9	24,876	21.6	9,720	15,156	0.35
10	0.17	9.27	68.8	41,309	21.6	12,960	28,349	0.65
15	0.25	7.99	59.3	53,373	21.6	16,200	37,173	0.85
20	0.33	7.05	52.4	62,824	21.6	19,440	43,384	1.00
30	0.50	5.77	42.8	77,090	21.6	25,920	51,170	1.17
					MAXIMUM REQUIRED STORAGE =		51,170	1.17

UNDERGROUND STORAGE PROVIDED

STORM LINE	LENGTH (FEET)	DIAMETER (INCHES)	VOLUME (CUBIC FEET)
STORM SEWER LINE A	389	30	1909
STORM SEWER LAT A-1	250	30	1227
STORM SEWER LAT A-1	26	24	82
STORM SEWER LAT A-2	23	21	55
STORM SEWER LAT A-3	29	21	70
Total			3343

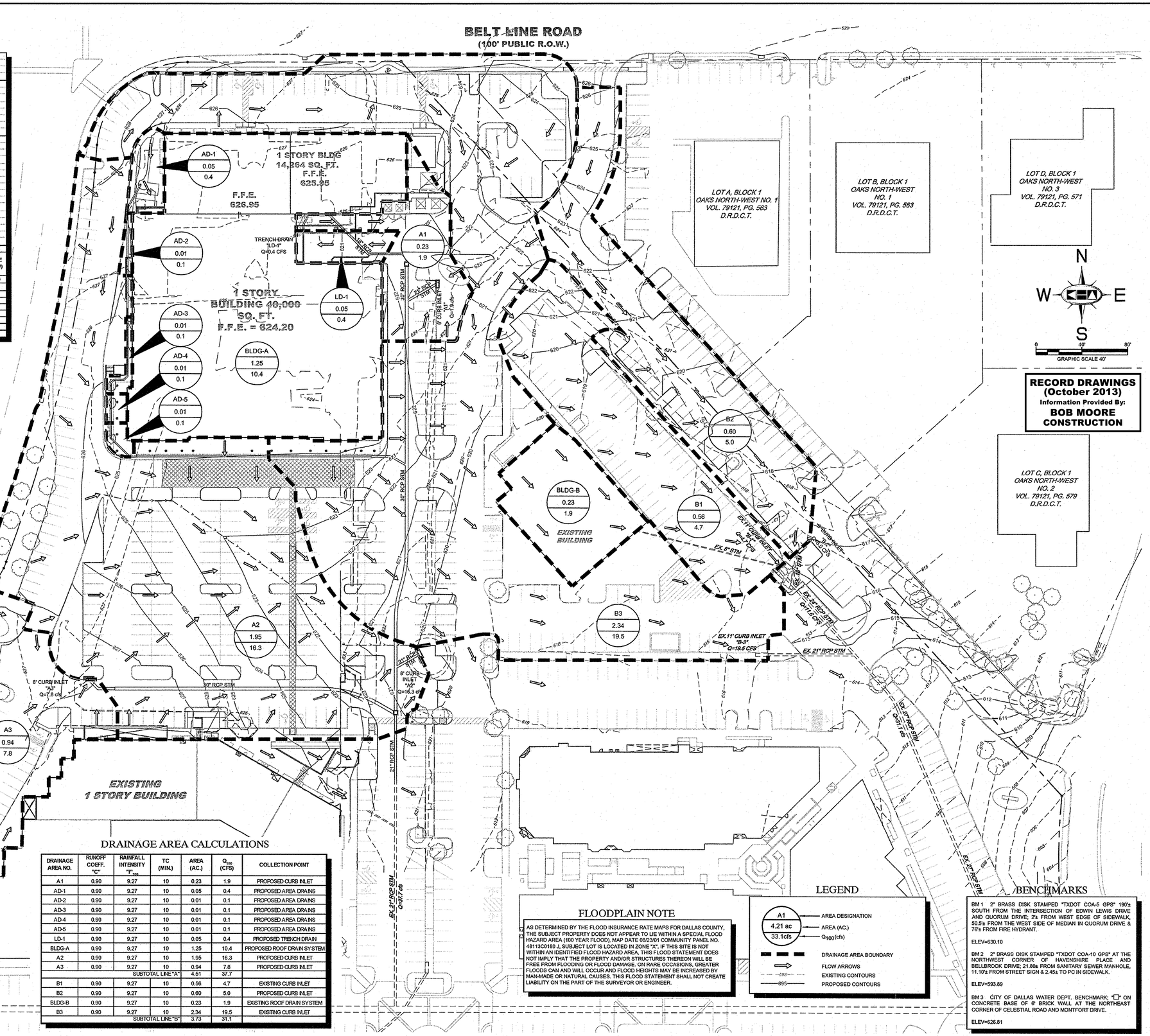

RECORD DRAWINGS
(October 2013)
Information Provided By:
BOB MOORE CONSTRUCTION

DRAINAGE AREA CALCULATIONS

DRAINAGE AREA NO.	RUNOFF COEFF. "C"	RAINFALL INTENSITY "I" $_{100}$	TC (MIN.)	AREA (AC.)	Q_{100} (CFS)	COLLECTION POINT
A1	0.90	9.27	10	0.23	1.9	PROPOSED CURB INLET
AD-1	0.90	9.27	10	0.05	0.4	PROPOSED AREA DRAINS
AD-2	0.90	9.27	10	0.01	0.1	PROPOSED AREA DRAINS
AD-3	0.90	9.27	10	0.01	0.1	PROPOSED AREA DRAINS
AD-4	0.90	9.27	10	0.01	0.1	PROPOSED AREA DRAINS
AD-5	0.90	9.27	10	0.01	0.1	PROPOSED AREA DRAINS
LD-1	0.90	9.27	10	0.05	0.4	PROPOSED TRENCH DRAIN
BLDG-A	0.90	9.27	10	1.25	10.4	PROPOSED ROOF DRAIN SYSTEM
A2	0.90	9.27	10	1.95	16.3	PROPOSED CURB INLET
A3	0.90	9.27	10	0.94	7.8	PROPOSED CURB INLET
			SUBTOTAL LINE "A"	4.51	37.7	
B1	0.90	9.27	10	0.56	4.7	EXISTING CURB INLET
B2	0.90	9.27	10	0.60	5.0	PROPOSED CURB INLET
BLDG-B	0.90	9.27	10	0.23	1.9	EXISTING ROOF DRAIN SYSTEM
B3	0.90	9.27	10	2.34	19.5	EXISTING CURB INLET
			SUBTOTAL LINE "B"	3.73	31.1	

FLOODPLAIN NOTE

AS DETERMINED BY THE FLOOD INSURANCE RATE MAPS FOR DALLAS COUNTY, THE SUBJECT PROPERTY DOES NOT APPEAR TO LIE WITHIN A SPECIAL FLOOD HAZARD AREA (100 YEAR FLOOD), MAP DATE 08/23/01 COMMUNITY PANEL NO. 48113C0180 J, SUBJECT LOT IS LOCATED IN ZONE "X". IF THIS SITE IS NOT WITHIN AN IDENTIFIED FLOOD HAZARD AREA, THIS FLOOD STATEMENT DOES NOT IMPLY THAT THE PROPERTY AND/OR STRUCTURES THEREON WILL BE FREE FROM FLOODING OR FLOOD DAMAGE. ON RARE OCCASIONS, GREATER FLOODS CAN AND WILL OCCUR AND FLOOD HEIGHTS MAY BE INCREASED BY MAN-MADE OR NATURAL CAUSES. THIS FLOOD STATEMENT SHALL NOT CREATE LIABILITY ON THE PART OF THE SURVEYOR OR ENGINEER.

LEGEND

A1 / 4.21 ac / 33.1cfs	AREA DESIGNATION
	AREA (AC.)
	Q_{100}(cfs)
	DRAINAGE AREA BOUNDARY
	FLOW ARROWS
692	EXISTING CONTOURS
695	PROPOSED CONTOURS

BENCHMARKS

BM 1 2" BRASS DISK STAMPED "TXDOT COA-5 GPS" 190'± SOUTH FROM THE INTERSECTION OF EDWIN LEWIS DRIVE AND QUORUM DRIVE; 2'± FROM WEST EDGE OF SIDEWALK, 50.5'± FROM THE WEST SIDE OF MEDIAN IN QUORUM DRIVE & 76'± FROM FIRE HYDRANT.

ELEV=630.10

BM 2 2" BRASS DISK STAMPED "TXDOT COA-10 GPS" AT THE NORTHWEST CORNER OF HAVENSHIRE PLACE AND BELLBROOK DRIVE; 21.80± FROM SANITARY SEWER MANHOLE, 11.10'± FROM STREET SIGN & 2.45± TO PC IN SIDEWALK.

ELEV=593.89

BM 3 CITY OF DALLAS WATER DEPT. BENCHMARK; ☐ ON CONCRETE BASE OF 6' BRICK WALL AT THE NORTHEAST CORNER OF CELESTIAL ROAD AND MONTFORT DRIVE.

ELEV=626.81

No.	REVISIONS	DATE	BY

Kimley-Horn and Associates, Inc.
State of Texas Registration No. F-928
5750 GENESIS COURT, SUITE 200, FRISCO, TX 75034
PHONE: 972-335-3580 FAX: 972-335-3779
WWW.KIMLEY-HORN.COM

STATE OF TEXAS
ROY BRASWELL
104908
LICENSED
PROFESSIONAL ENGINEER
9/28/12

KHA PROJECT	063319038
DATE	9/27/2012
SCALE	AS SHOWN
DESIGNED BY	TBB
DRAWN BY	AAE
CHECKED BY	TBB

VILLAGE ON THE PARKWAY
ADDISON, TEXAS

DRAINAGE AREA MAP

SHEET NUMBER
C-10

PLOTTED BY MAURICIO, MARLA 9/27/2013 8:55 AM
DWG NAME K:\DFW_CIVIL\051903\-VOP\DWG\PLAN SET\C-10-DRAINAGE AREA.MAP]
LAST SAVED 9/27/2013 8:53 AM
This document, together with the concepts and designs presented herein, as an instrument of service, is intended only for the specific purpose and client for which it was prepared. Reuse of and improper reliance on this document without written authorization and adaptation by Kimley-Horn and Associates, Inc. shall be without liability to Kimley-Horn and Associates, Inc.

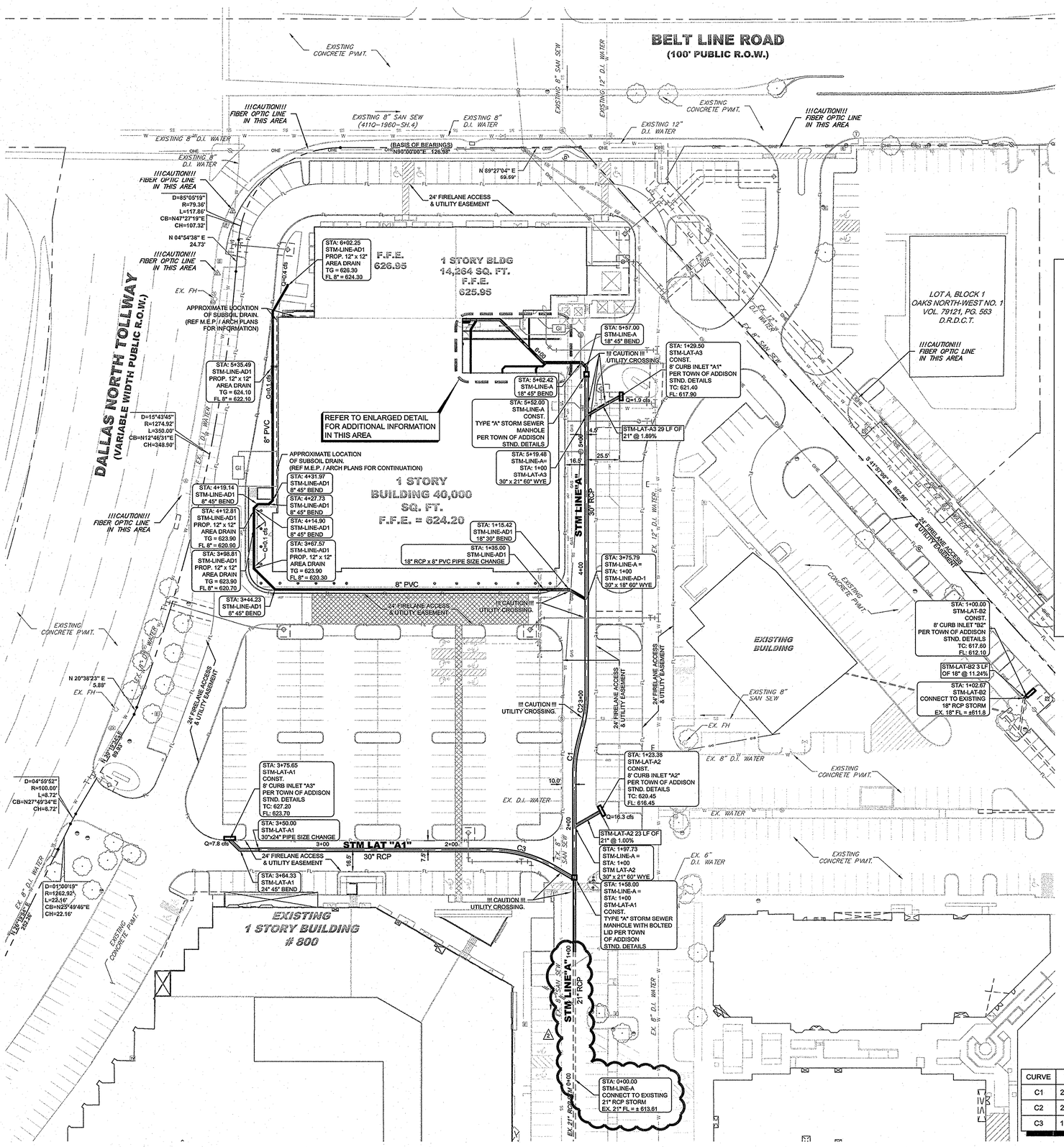

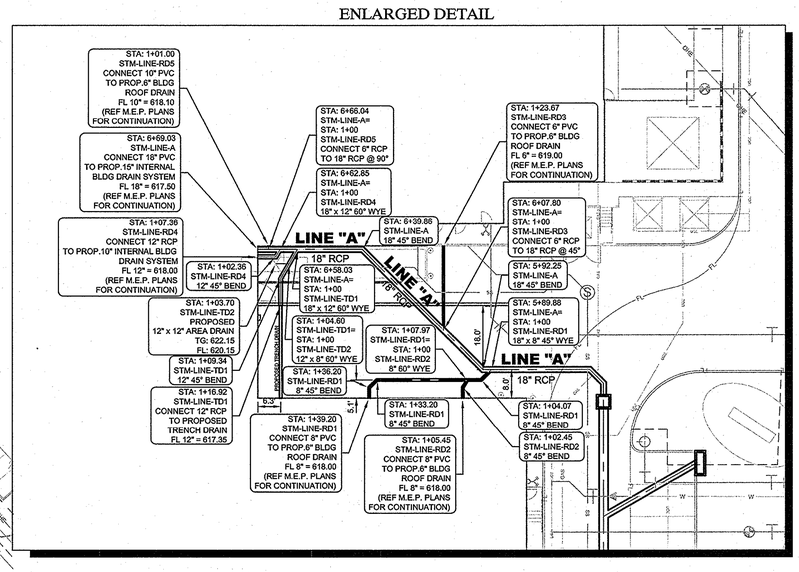

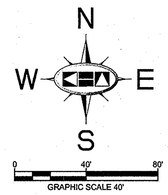

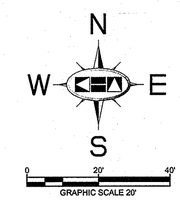

STOP!
CALL BEFORE YOU DIG
DIG TESS
1-800-DIG-TESS
(at least 72 hours prior to digging)

!!WARNING!!
EXISTING UTILITIES IN THE AREA. CONTRACTOR SHALL FIELD VERIFY THE LOCATION OF ALL EXISTING UTILITIES WITH THE PROVIDER PRIOR TO START OF CONSTRUCTION AND SHALL IMMEDIATELY NOTIFY THE ENGINEER OF ANY CONFLICTS DISCOVERED. CONTRACTOR IS RESPONSIBLE FOR COORDINATING UTILITY RELOCATION WHERE NECESSARY AND PROTECTING EXISTING UTILITIES (SHOWN OR NOT SHOWN). IF ANY EXISTING UTILITIES ARE DAMAGED, THE CONTRACTOR SHALL REPLACE THEM AT THEIR OWN EXPENSE.

RECORD DRAWINGS
(October 2013)
Information Provided By:
BOB MOORE CONSTRUCTION

NOTE

PRIOR TO CONSTRUCTION, CONTRACTOR TO NOTIFY ENGINEER IMMEDIATELY SHOULD THERE BE ANY DISCREPANCIES OR IF EXISTING FIELD CONDITIONS VARY FROM THOSE SHOWN ON THESE PLANS.

BENCHMARKS

BM 1 2" BRASS DISK STAMPED "TXDOT COA-5 GPS" 190'± SOUTH FROM THE INTERSECTION OF EDWIN LEWIS DRIVE AND QUORUM DRIVE; 2'± FROM WEST EDGE OF SIDEWALK, 50.5'± FROM THE WEST SIDE OF MEDIAN IN QUORUM DRIVE & 76'± FROM FIRE HYDRANT.

ELEV=630.10

BM 2 2" BRASS DISK STAMPED "TXDOT COA-10 GPS" AT THE NORTHWEST CORNER OF HAVENSHIRE PLACE AND BELLBROOK DRIVE; 21.80± FROM SANITARY SEWER MANHOLE, 11.10'± FROM STREET SIGN & 2.45± TO PC IN SIDEWALK.

ELEV=593.89

BM 3 CITY OF DALLAS WATER DEPT. BENCHMARK; "□" ON CONCRETE BASE OF 6' BRICK WALL AT THE NORTHEAST CORNER OF CELESTIAL ROAD AND MONTFORT DRIVE.

ELEV=626.81

STORM SEWER CENTERLINE CURVE TABLE

CURVE	PC	PT	RADIUS	LENGTH	CHORD BEARING	CHORD	DELTA	TANGENT
C1	2+38.57	2+64.75	100.00'	26.18'	N7°30'00"E	26.11'	15°00'00"	13.17'
C2	2+75.13	3+01.31	100.00'	26.18'	N7°30'00"E	26.11'	15°00'00"	13.17'
C3	1+17.83	1+70.19	100.00'	52.36'	N75°00'00"W	51.76'	30°00'00"	26.79'

No.	REVISIONS	DATE	BY
1	UPDATED STORM CONNECTION	11/15/2012	TBB

Kimley-Horn and Associates, Inc.
State of Texas Registration No. F-928
5750 GENESIS COURT, SUITE 200, FRISCO, TX 75034
PHONE: 972-335-3580 FAX: 972-335-3779
WWW.KIMLEY-HORN.COM

STATE OF TEXAS
ROY BRASWELL
104908
LICENSED
PROFESSIONAL ENGINEER
11/19/2012

KHA PROJECT	063319038
DATE	9/27/2012
SCALE	AS SHOWN
DESIGNED BY	TBB
DRAWN BY	AAE
CHECKED BY	TBB

VILLAGE ON THE PARKWAY
ADDISON, TEXAS

STORM SEWER PLAN

SHEET NUMBER
C-11

This document, together with the concepts and designs presented herein, as an instrument of service, is intended only for the specific purpose and client for which it was prepared. Reuse of and improper reliance on this document without written authorization and adaptation by Kimley-Horn and Associates, Inc. shall be without liability to Kimley-Horn and Associates, Inc.

PLOTTED BY: BRASWELL, TERRY 11/19/2012 1:58 PM
DWG NAME: K:\DFW_CIVIL\63319038-VOP\DWG\PLAN SET\C-11-STM PLAN.DWG [C-11 STORM SEWER PLAN]
LAST SAVED: 11/15/2012 2:09 PM

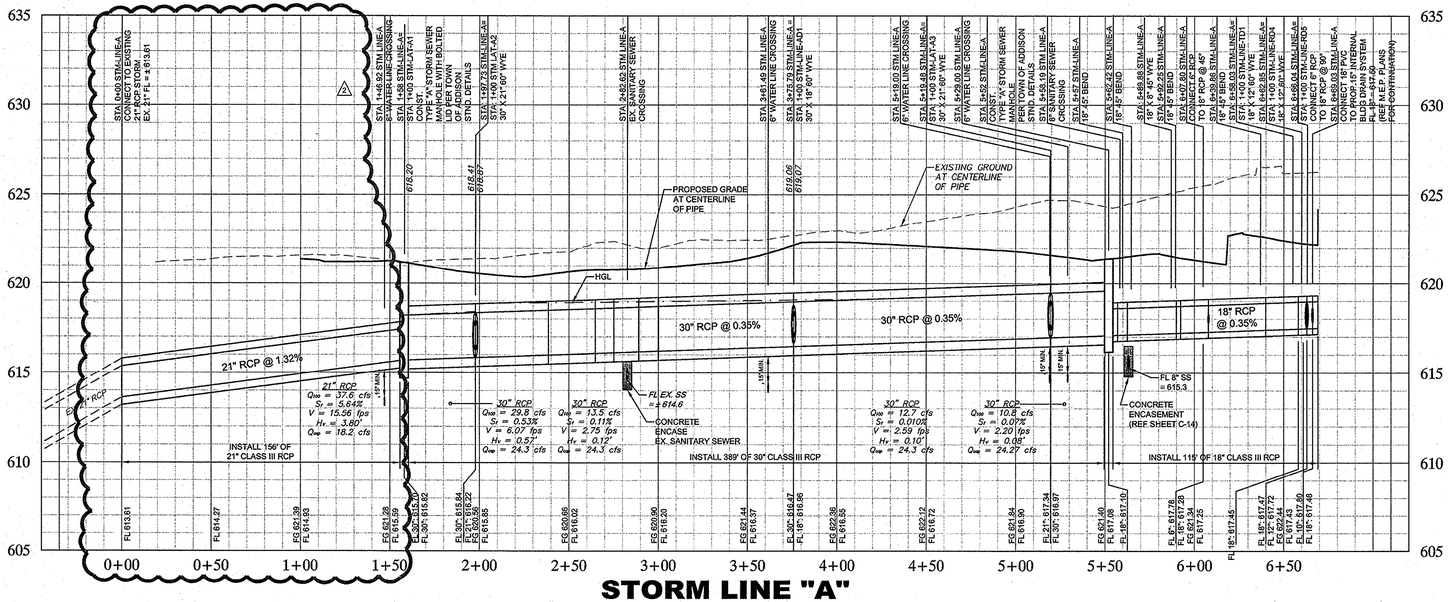

STORM LINE "A"

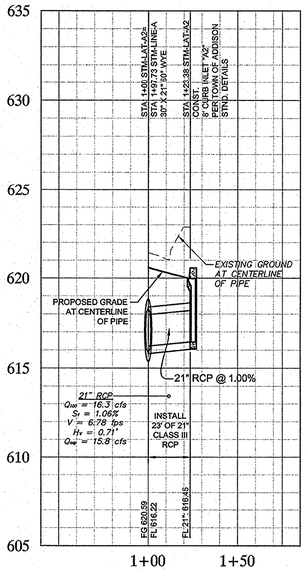

STORM LAT "A2"

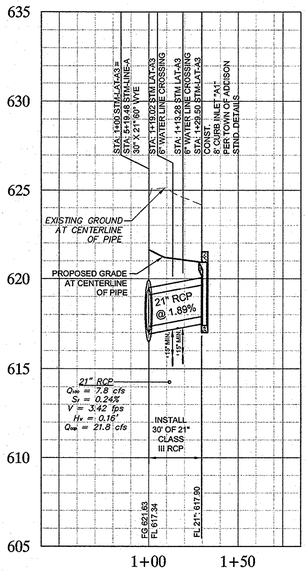

STORM LINE "A3"

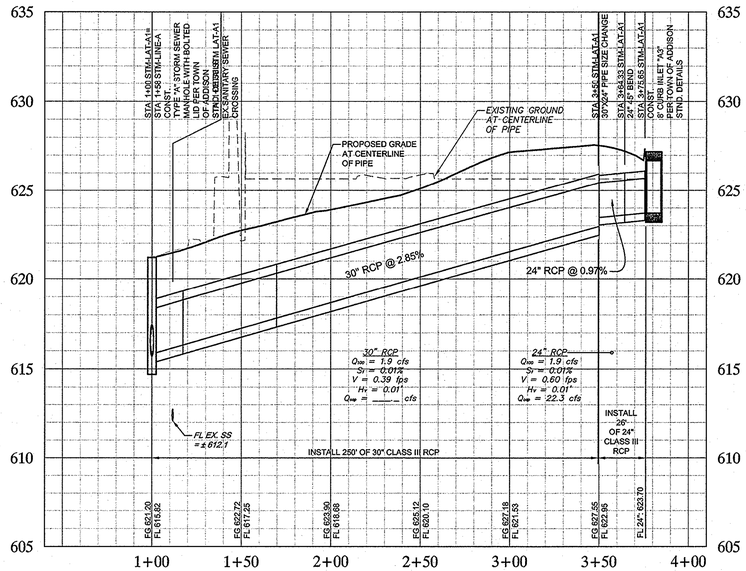

STORM LAT "A-1"

HORIZONTAL 0 40' 80' GRAPHIC SCALE 40'

VERTICAL 0 4' 8' GRAPHIC SCALE 4'

Frequency: 100 (years)

Manning's n: 0.013 | C factor 0.9 | Intensity: 9.27 in/hr | Updated: 9/17/2012 | Calculated by: TBB | Checked by: TBB

RUNOFF COLLECTION POINT Downstream Station	Upstream Station	Distance Between Collection Points "L" (feet)	DRAINAGE AREA Drainage Area Name	Increm. "A" (acres)	Accum. "A" (acres)	Runoff Coeff. "C"	Accum. "CA" (acres)	Intensity "I" (in./hr.)	STORMWATER RUNOFF Increm. "Q" (c.f.s.)	Accum. "Q" (c.f.s.)	PROPOSED STORM SEWER Round Pipe Diameter "d" (in.)	Proposed Storm Sewer Slope "S_p" (ft/ft.)	Slope of Hydraulic Gradient Based on Pipe Size "S" (ft/ft.)	Full Flow Capacity "C" (c.f.s.)	Q_{100} Flow Velocity "V_c" (f.p.s.)	Head Loss Coeff. K_j	Velocity Head Loss at Upstream Station $\frac{V_2^2 - K_j V_1^2}{2g}$ (feet)	Pipe Flowline Elev. Downstream (feet)	Pipe Flowline Elev. Upstream (feet)	Top of Pipe Elev. Downstream (feet)	Top of Pipe Elev. Upstream (feet)	Hg Elev. Downstream (feet)	Hg Elev. Upstream (feet)	Full/Partial Flow
1	2	3	4	5	6	7	8	9	10	11	13	16	17	18	21	27	28	30	29	32	31	34	33	35
Storm Sewer Line A																								
5+52.00																				619.58		619.36		PARTIAL
	5+52.00	32.52	BLDG-A/LD-1	1.30	1.30	0.90	1.17	9.27	10.8	10.8	30	0.0035	0.0007	24.3	2.21	1.25	0.09		617.08		619.58		619.26	
5+19.48																		616.97		619.47		619.24		PARTIAL
	5+19.48	143.69	A1	0.23	1.53	0.90	1.38	9.27	1.9	12.8	30	0.0035	0.0010	24.3	2.60	1.00	0.03		616.97		619.47		619.21	
3+75.79																		616.47		618.97		619.07		FULL
	3+75.79	178.06	AD-1-AD-5	0.09	1.62	0.90	1.46	9.27	0.8	13.5	30	0.0035	0.0011	24.3	2.75	1.00	0.01		616.47		618.97		619.06	
1+97.73																		615.84		618.34		618.87		FULL
	1+97.73	39.73	A2	1.95	3.57	0.90	3.21	9.27	16.3	29.8	30	0.0035	0.0053	24.3	6.07	1.00	0.45		615.84		618.34		618.41	
1+58.00																		615.70		618.20		618.20		FULL
	1+58.00	58.00	A3	0.94	4.51	0.90	4.06	9.27	7.8	37.6	21	0.0035	0.0564	9.4	15.64	1.00	3.23		615.70		617.45		620.52	
1+00.00																		615.50		617.25		617.25		FULL

RECORD DRAWINGS (October 2013)
Information Provided By:
BOB MOORE CONSTRUCTION

NOTE

PRIOR TO CONSTRUCTION, CONTRACTOR TO NOTIFY ENGINEER IMMEDIATELY SHOULD THERE BE ANY DISCREPANCIES OR IF EXISTING FIELD CONDITIONS VARY FROM THOSE SHOWN ON THESE PLANS.

!!WARNING!!
EXISTING UTILITIES IN THE AREA. CONTRACTOR SHALL FIELD VERIFY THE LOCATION OF ALL EXISTING UTILITIES WITH THE PROVIDER PRIOR TO START OF CONSTRUCTION AND SHALL IMMEDIATELY NOTIFY THE ENGINEER OF ANY CONFLICTS DISCOVERED. CONTRACTOR IS RESPONSIBLE FOR COORDINATING UTILITY RELOCATION WHERE NECESSARY AND PROTECTING EXISTING UTILITIES (SHOWN OR NOT SHOWN). IF ANY EXISTING UTILITIES ARE DAMAGED, THE CONTRACTOR SHALL REPLACE THEM AT THEIR OWN EXPENSE.

STOP!
CALL BEFORE YOU DIG
DIG TESS
1-800-DIG-TESS
(at least 72 hours prior to digging)

BENCHMARKS

BM 1 2" BRASS DISK STAMPED "TXDOT COA-5 GPS" 190'± SOUTH FROM THE INTERSECTION OF EDWIN LEWIS DRIVE AND QUORUM DRIVE; 2'± FROM WEST EDGE OF SIDEWALK, 50.5± FROM THE WEST SIDE OF MEDIAN IN QUORUM DRIVE & 76'± FROM FIRE HYDRANT.

ELEV=630.10

BM 2 2" BRASS DISK STAMPED "TXDOT COA-10 GPS" AT THE NORTHWEST CORNER OF HAVENSHIRE PLACE AND BELLBROOK DRIVE; 21.80± FROM SANITARY SEWER MANHOLE, 11.10'± FROM STREET SIGN & 2.45± TO PC IN SIDEWALK.

ELEV=593.89

BM 3 CITY OF DALLAS WATER DEPT. BENCHMARK; "□" ON CONCRETE BASE OF 6' BRICK WALL AT THE NORTHEAST CORNER OF CELESTIAL ROAD AND MONTFORT DRIVE.

ELEV=626.61

No.	REVISIONS	DATE	BY
1	UPDATED STORM CONNECTION	11/15/2012	TBB

Kimley-Horn and Associates, Inc.
State of Texas Registration No. F-928
5750 GENESIS COURT, SUITE 200, FRISCO, TX 75034
PHONE: 972-335-3580 FAX: 972-335-3779
WWW.KIMLEY-HORN.COM

STATE OF TEXAS — ROY BRASWELL — 104908 — LICENSED PROFESSIONAL ENGINEER — 11/15/2012

KHA PROJECT 063319038
DATE 9/27/2012
SCALE AS SHOWN
DESIGNED BY TBB
DRAWN BY AAE
CHECKED BY TBB

VILLAGE ON THE PARKWAY
ADDISON, TEXAS

STORM SEWER PROFILES

SHEET NUMBER C-12

This document, together with the concepts and designs presented herein, as an instrument of service, is intended only for the specific purpose and client for which it was prepared. Reuse of and improper reliance on this document without written authorization and adaptation by Kimley-Horn and Associates, Inc. shall be without liability to Kimley-Horn and Associates, Inc.

PLOTTED BY BRASWELL, TREY 11/15/2012 1:42 PM
DWG NAME K:\PRL_CIVIL\063319038-VOTP\DWG\PLAN SET\C-12-STORM-SEWER PROFILES.DWG [C-12-STORM-SEWER PROFILES]
LAST SAVED 11/15/2012 2:08 PM

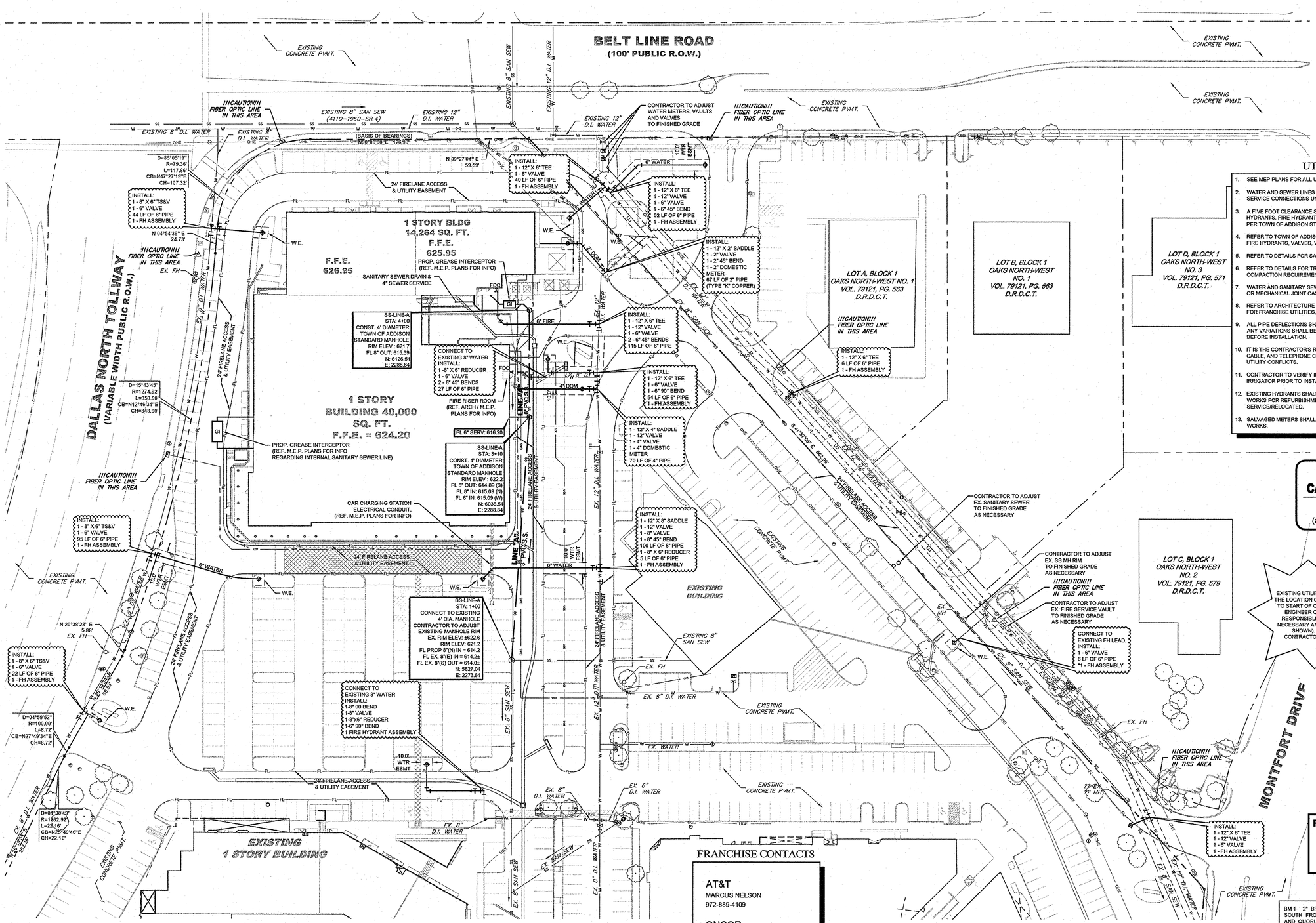

UTILITY NOTES

1. SEE MEP PLANS FOR ALL UTILITY CONNECTIONS INTO BUILDING.
2. WATER AND SEWER LINES SHALL STUB 5 FEET FROM BUILDING FOR SERVICE CONNECTIONS UNLESS OTHERWISE NOTED.
3. A FIVE FOOT CLEARANCE SHALL BE MAINTAINED AROUND ALL FIRE HYDRANTS. FIRE HYDRANTS SHALL BE LOCATED 3'-6" FROM BACK OF CURB PER TOWN OF ADDISON STANDARD DETAIL.
4. REFER TO TOWN OF ADDISON DETAILS FOR WATER METER, METER BOX, FIRE HYDRANTS, VALVES, VALVE BOXES AND SERVICE INSTALLATION.
5. REFER TO DETAILS FOR SANITARY SEWER MANHOLE REQUIREMENTS.
6. REFER TO DETAILS FOR TRENCHING, BEDDING, BACKFILL, AND TRENCH COMPACTION REQUIREMENTS.
7. WATER AND SANITARY SEWER PIPE SHALL BE CONSTRUCTED OF SLIP-ON OR MECHANICAL JOINT CAST OR DUCTILE IRON PIPE, OR PVC PIPE.
8. REFER TO ARCHITECTURE PLANS FOR LOCATION AND SIZING OF SLEEVES FOR FRANCHISE UTILITIES, IRRIGATION, ETC.
9. ALL PIPE DEFLECTIONS SHALL BE PER MANUFACTURER'S SPECIFICATIONS. ANY VARIATIONS SHALL BE APPROVED IN WRITING BY THE ENGINEER BEFORE INSTALLATION.
10. IT IS THE CONTRACTOR'S RESPONSIBILITY TO DEFLECT ELECTRIC, GAS, CABLE, AND TELEPHONE CONDUIT AND PIPING AS REQUIRED TO AVOID UTILITY CONFLICTS.
11. CONTRACTOR TO VERIFY IRRIGATION METER SIZE WITH LICENSED IRRIGATOR PRIOR TO INSTALLATION.
12. EXISTING HYDRANTS SHALL BE TAKEN TO TOWN OF ADDISON PUBLIC WORKS FOR REFURBISHMENT PRIOR TO BEING PUT BACK IN SERVICE/RELOCATED.
13. SALVAGED METERS SHALL BE RETURNED TO TOWN OF ADDISON PUBLIC WORKS.

STOP!
CALL BEFORE YOU DIG
DIG TESS
1-800-DIG-TESS
(at least 72 hours prior to digging)

!!WARNING!!
EXISTING UTILITIES IN THE AREA. CONTRACTOR SHALL FIELD VERIFY THE LOCATION OF ALL EXISTING UTILITIES WITH THE PROVIDER PRIOR TO START OF CONSTRUCTION AND SHALL IMMEDIATELY NOTIFY THE ENGINEER OF ANY CONFLICTS DISCOVERED. CONTRACTOR IS RESPONSIBLE FOR COORDINATING UTILITY RELOCATION WHERE NECESSARY AND PROTECTING EXISTING UTILITIES (SHOWN OR NOT SHOWN). IF ANY EXISTING UTILITIES ARE DAMAGED, THE CONTRACTOR SHALL REPLACE THEM AT THEIR OWN EXPENSE.

RECORD DRAWINGS
(October 2013)
Information Provided By:
BOB MOORE CONSTRUCTION

FRANCHISE CONTACTS

AT&T
MARCUS NELSON
972-889-4109

ONCOR
KAREN EASTMAN
817-355-7050

ATMOS
GARY DICKINSON
972-360-4428

TIME WARNER CABLE
DAVE CHENEY
214-320-7406

NOTE

PRIOR TO CONSTRUCTION, CONTRACTOR TO NOTIFY ENGINEER IMMEDIATELY SHOULD THERE BE ANY DISCREPANCIES OR IF EXISTING FIELD CONDITIONS VARY FROM THOSE SHOWN ON THESE PLANS.

FIRE SPRINKLER NOTE

FIRE SPRINKLER LINE SHALL BE SIZED AND INSTALLED BY A STATE LICENSED FIRE SPRINKLER CONTRACTOR

BENCHMARKS

BM 1 2" BRASS DISK STAMPED "TXDOT COA-5 GPS" 190'± SOUTH FROM THE INTERSECTION OF EDWIN LEWIS DRIVE AND QUORUM DRIVE; 2'± FROM WEST EDGE OF SIDEWALK, 50.5'± FROM THE WEST SIDE OF MEDIAN IN QUORUM DRIVE & 76'± FROM FIRE HYDRANT.

ELEV=630.10

BM 2 2" BRASS DISK STAMPED "TXDOT COA-10 GPS" AT THE NORTHWEST CORNER OF HAVENSHIRE PLACE AND BELLBROOK DRIVE; 21.80± FROM SANITARY SEWER MANHOLE, 11.10'± FROM STREET SIGN & 2.45± TO PC IN SIDEWALK.

ELEV=593.89

BM 3 CITY OF DALLAS WATER DEPT. BENCHMARK; "□" ON CONCRETE BASE OF 6' BRICK WALL AT THE NORTHEAST CORNER OF CELESTIAL ROAD AND MONTFORT DRIVE.

ELEV=626.81

N
W E
S
0 40' 80'
GRAPHIC SCALE 40'

No.	REVISIONS	DATE	BY

Kimley-Horn and Associates, Inc.
State of Texas Registration No. F-928
5750 GENESIS COURT, SUITE 200, FRISCO, TX 75034
PHONE: 972-335-3580 FAX: 972-335-3779
WWW.KIMLEY-HORN.COM

STATE OF TEXAS
ROY BRASWELL
104908
LICENSED
PROFESSIONAL ENGINEER
9/27/12

KHA PROJECT 063319038	
DATE 9/27/2012	
SCALE AS SHOWN	
DESIGNED BY TBB	
DRAWN BY AAE	
CHECKED BY TBB	

VILLAGE ON THE PARKWAY
ADDISON, TEXAS

UTILITY PLAN

SHEET NUMBER
C-13

This document, together with the concepts and designs presented herein, as an instrument of service, is intended only for the specific purpose and client for which it was prepared. Reuse of and improper reliance on this document without written authorization and adaptation by Kimley-Horn and Associates, Inc. shall be without liability to Kimley-Horn and Associates, Inc.

PLOTTED BY MAURICIO, MARLA 9/27/2012 8:57 AM
DWG NAME K:\DFW_CIV\063319038-VOP\DWG\PLAN SET\C-13-UTILITY PLAN.DWG
LAYOUT C-13 UTILITY PLAN

PLOTTED BY MAURICIO, MARLA 9/27/2012 8:57 AM
DWG NAME K:\FW1_CIVIL\63319038-VOP\DWG\PLAN SET\C-14-SS PROF.DWG [C-14 SANITARY SEWER PROFILE]
LAST SAVED 9/20/2012 4:36 PM

This document, together with the concepts and designs presented herein, as an instrument of service, is intended only for the specific purpose and client for which it was prepared. Reuse of and improper reliance on this document without written authorization and adaptation by Kimley-Horn and Associates, Inc. shall be without liability to Kimley-Horn and Associates, Inc.

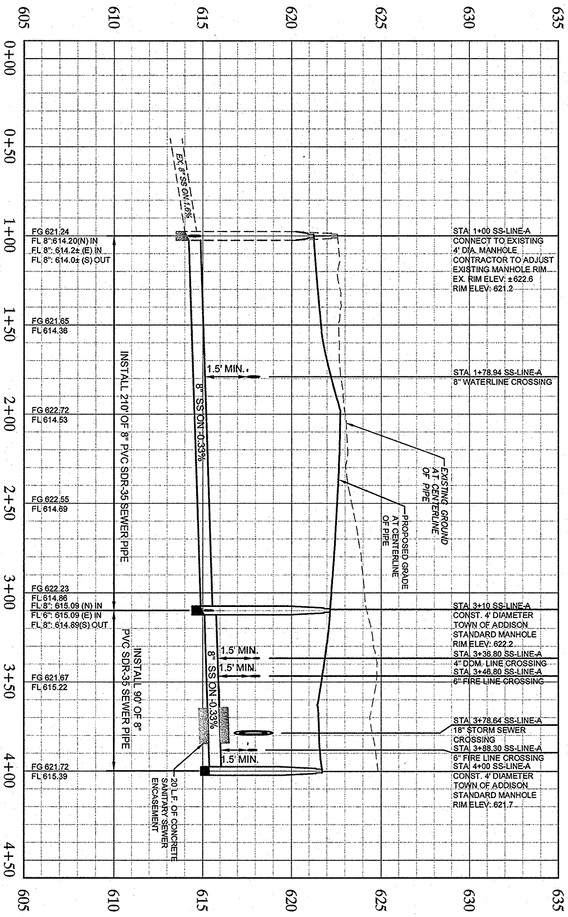

RECORD DRAWINGS (October 2013)
Information Provided By:
BOB MOORE CONSTRUCTION

GRAPHIC SCALE 4" — 0, 2, 4
VERTICAL

GRAPHIC SCALE 40' — 0, 40', 80'
HORIZONTAL

SHEET NUMBER
C-14

SANITARY SEWER PROFILE

VILLAGE ON THE PARKWAY
ADDISON, TEXAS

KHA PROJECT	063319038
DATE	9/27/2012
SCALE	AS SHOWN
DESIGNED BY	TBB
DRAWN BY	AAE
CHECKED BY	TBB

STATE OF TEXAS
ROY BASWELL
104908
LICENSED
PROFESSIONAL ENGINEER
9/26/12

Kimley-Horn and Associates, Inc.
State of Texas Registration No. F-928
5750 GENESIS COURT, SUITE 200, FRISCO, TX 75034
PHONE: 972-335-3580 FAX: 972-335-3779
WWW.KIMLEY-HORN.COM

No.	REVISIONS	DATE	BY

TOWN OF ADDISON
GENERAL CONSTRUCTION NOTES

1. ALL MATERIALS AND WORKMANSHIP (WITHIN DALLAS PARKWAY RIGHT-OF-WAY) SHALL CONFORM WITH THE STANDARD SPECIFICATIONS FOR PUBLIC WORKS CONSTRUCTION FOR NORTH CENTRAL TEXAS, LATEST EDITION, AND THE CITY OF DALLAS DEPARTMENT OF PUBLIC WORKS AND TRANSPORTATION ADDENDUM.
2. DURING THE CONSTRUCTION OF THESE IMPROVEMENTS (WITHIN DALLAS PARKWAY RIGHT-OF-WAY), ANY INTERPRETATION OF THE STANDARD SPECIFICATIONS FOR PUBLIC WORKS CONSTRUCTION FOR NORTH CENTRAL TEXAS, AND ANY MATTER WHICH REQUIRES THE APPROVAL OF THE OWNER, MUST BE APPROVED BY THE DIRECTOR OF PUBLIC WORKS AND TRANSPORTATION OR HIS DESIGNEE BEFORE ANY CONSTRUCTION INVOLVING THAT DECISION COMMENCES. ASSUMPTIONS ABOUT WHAT THESE DECISIONS MIGHT BE WHICH AREA MADE DURING THE BIDDING PHASE WILL HAVE NO BEARING ON THE DECISION.
3. FOR ADJUSTMENTS OF DALLAS WATER UTILITIES APPURTENANCES OR TO VERIFY LOCATIONS OF EXISTING WATER AND WASTEWATER MAINS IN AREA, CALL (214) 670-1770 AT LEAST (3) THREE WORKING DAYS PRIOR TO CONSTRUCTION. FOR SERVICES NEEDED WITHIN THE TOWN OF ADDISON, CALL (972) 450-2871 AT LEAST (3) THREE WORKING DAYS PRIOR TO CONSTRUCTION
4. STREETS, ALLEYS, SIDEWALKS, DRIVEWAYS AND STORM DRAINAGE FACILITIES WITHIN RIGHT-OF-WAY, SHALL BE CONSTRUCTED IN CONFORMANCE WITH THE CITY OF DALLAS STANDARD CONSTRUCTION DETAILS, FILE 251D-1, LATEST EDITION.
5. ALL CONCRETE FOR PAVEMENT WITHIN DALLAS PARKWAY RIGHT-OF-WAY SHALL BE 4,000 PSI FOR MACHINE FINISH AND 4,500 PSI IF IT IS NECESSARY FOR HAND FINISH.

TRAFFIC CONTROL NOTES

1. ALL TRAFFIC CONTROL SHALL CONFORM TO THE LATEST VERSION OF THE TEXAS MANUAL ON UNIFORM TRAFFIC CONTROL DEVICES (MUTCD), PART VI. FIELD MODIFICATIONS MAY BE MADE TO ADDRESS LOCAL CONDITIONS WITH THE APPROVAL OF THE ENGINEER.
2. DESIGN SPEED OF DALLAS PARKWAY IS 40 MPH. MINIMUM SIGN SPACING IS 240'. MERGING TAPER FOR A 12' LANE IS 320' MINIMUM. CHANNELIZATION DEVICE SPACING IS AS SHOWN ON PLANS.
3. CONTRACTOR IS RESPONSIBLE FOR INSTALLATION, MAINTENANCE, AND REMOVAL OF TRAFFIC CONTROL DEVICES. TRAFFIC CONTROL DEVICES SHOULD BE INSPECTED DAILY AND REPAIRED OR REPLACED AS NECESSARY. AFTER REMOVAL, CONTRACTOR IS RESPONSIBLE FOR RESTORATION OF MODIFICATIONS TO ROADWAY AND SIDEWALK SURFACES, ROADWAY MARKINGS, AND SIGNAGE DUE TO TRAFFIC CONTROL DEVICES OR CONSTRUCTION ACTIVITY.
4. CHANNELIZATION DRUMS ARE THE MINIMUM LEVEL OF CHANNELIZATION DEVICE WHICH SHALL BE USED.
5. IF THE TCP IS ACTIVE DURING THE HOURS OF DARKNESS, ALL CHANNELIZATION DEVICES SHALL HAVE A TYPE "C" STEADY-BURN WARNING LIGHT OR EQUIVALENT REFLECTOR, AND ALL WARNING SIGNS SHALL HAVE A TYPE "A" LOW-INTENSITY FLASHING WARNING LIGHT.
6. TWO-WAY VEHICULAR TRAFFIC FLOW AND ACCESS TO ALL OCCUPIED PROPERTIES SHALL BE MAINTAINED AT ALL TIMES UNLESS NOTED. PEDESTRIAN PATHWAYS SHALL BE PROVIDED ACROSS OR AROUND THE WORK AREA IN ACCORDANCE WITH THE MUTCD.
7. WHEN THE TCP IS NOT IN EFFECT, ALL CHANNELIZING DEVICES SHALL BE REMOVED FROM THE TRAVEL LANES AND ALL SIGNS SHALL BE COVERED OR TURNED AWAY FROM THE DIRECTION OF TRAFFIC. THE TRAVEL LANE SURFACES SHALL BE RESTORED WITH STEEL PLATES OR TEMPORARY PAVEMENT. WHERE A SAW CUT OR PAVEMENT REMOVAL RESULTS IN MORE THAN A 2" DROP-OFF ADJACENT TO THE TRAVEL LANE, THE EDGE SHALL BE MARKED WITH VERTICAL PANELS OR CHANNELIZATION DRUMS AT 20' SPACING, AND WARNING SIGN CW 8-9a "SHOULDER DROP-OFF" SHALL BE POSTED 160' IN ADVANCE OF THE DROP-OFF CONDITION.

RECORD DRAWINGS
(October 2013)
Information Provided By:
BOB MOORE CONSTRUCTION

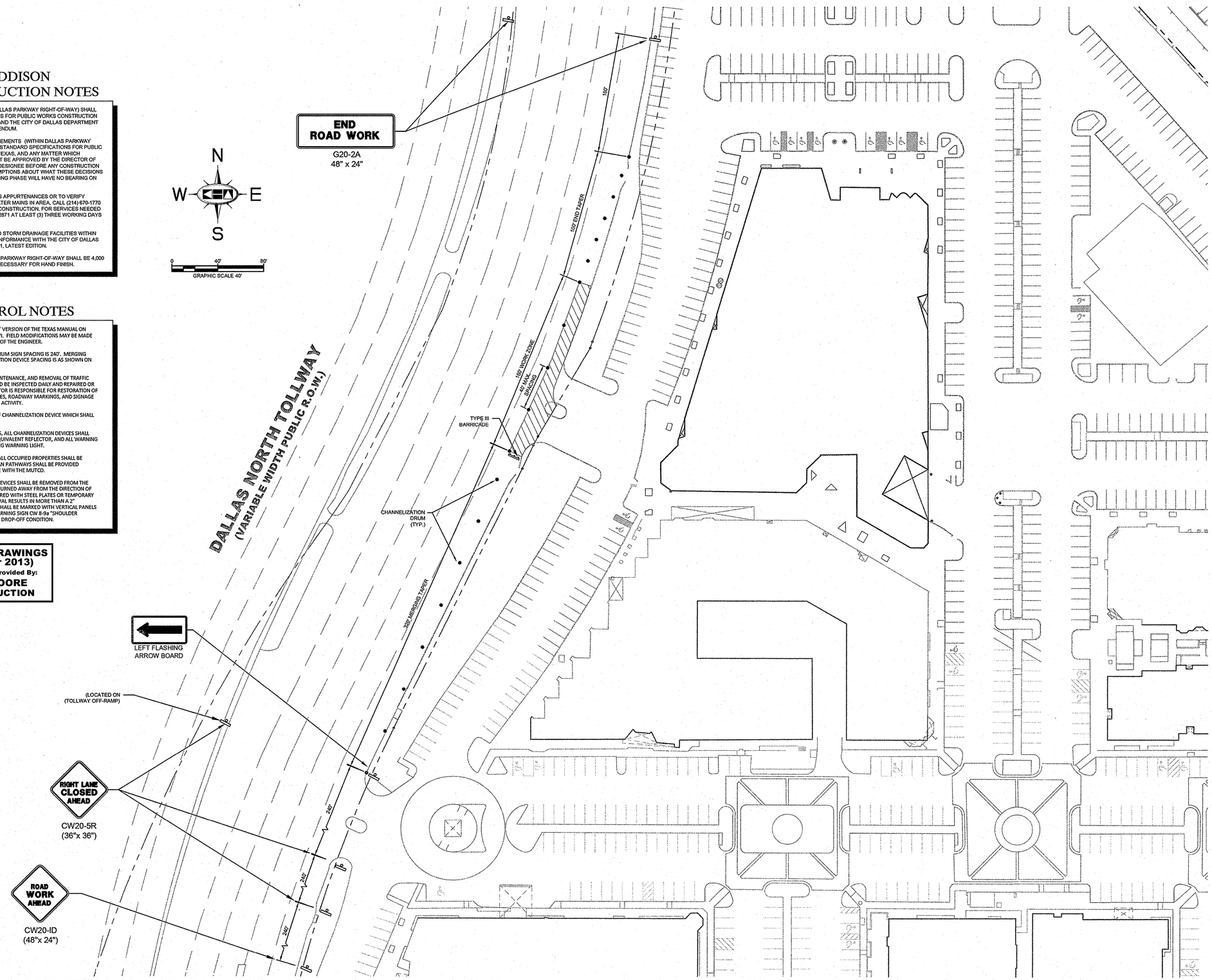

NORTHBOUND DALLAS PARKWAY
RIGHT LANE CLOSURE
TRAFFIC CONTROL PLAN

No.	REVISIONS	DATE	BY

Kimley-Horn and Associates, Inc.
State of Texas Registration No. F-928
5750 GENESIS COURT, SUITE 200, FRISCO, TX 75034
PHONE: 972-335-3580 FAX: 972-335-3779
WWW.KIMLEY-HORN.COM

STATE OF TEXAS
ROY BRASWELL
104908
LICENSED
PROFESSIONAL ENGINEER
9/27/12

KHA PROJECT 063319038
DATE 9/27/2012
SCALE AS SHOWN
DESIGNED BY TBB
DRAWN BY AAE
CHECKED BY TBB

VILLAGE ON THE PARKWAY
ADDISON, TEXAS

DALLAS PARKWAY TRAFFIC CONTROL PLAN

SHEET NUMBER
C-15

PLOTTED BY MAURICIO.MARIA 9/27/2012 8:56 AM
DWG NAME K:\FRL\CIV\063319038-VOPDWG\PLAN SET\C-15-TCP-TOLLWAY.DWG [C-15 TRAFFIC CONTROL PLAN DALLAS PARKWAY]
LAST SAVED 9/26/2012 5:13 PM
This document, together with the concepts and designs presented herein, as an instrument of service, is intended only for the specific purpose and client for which it was prepared. Reuse of and improper reliance on this document without written authorization and adaptation by Kimley-Horn and Associates, Inc. shall be without liability to Kimley-Horn and Associates, Inc.

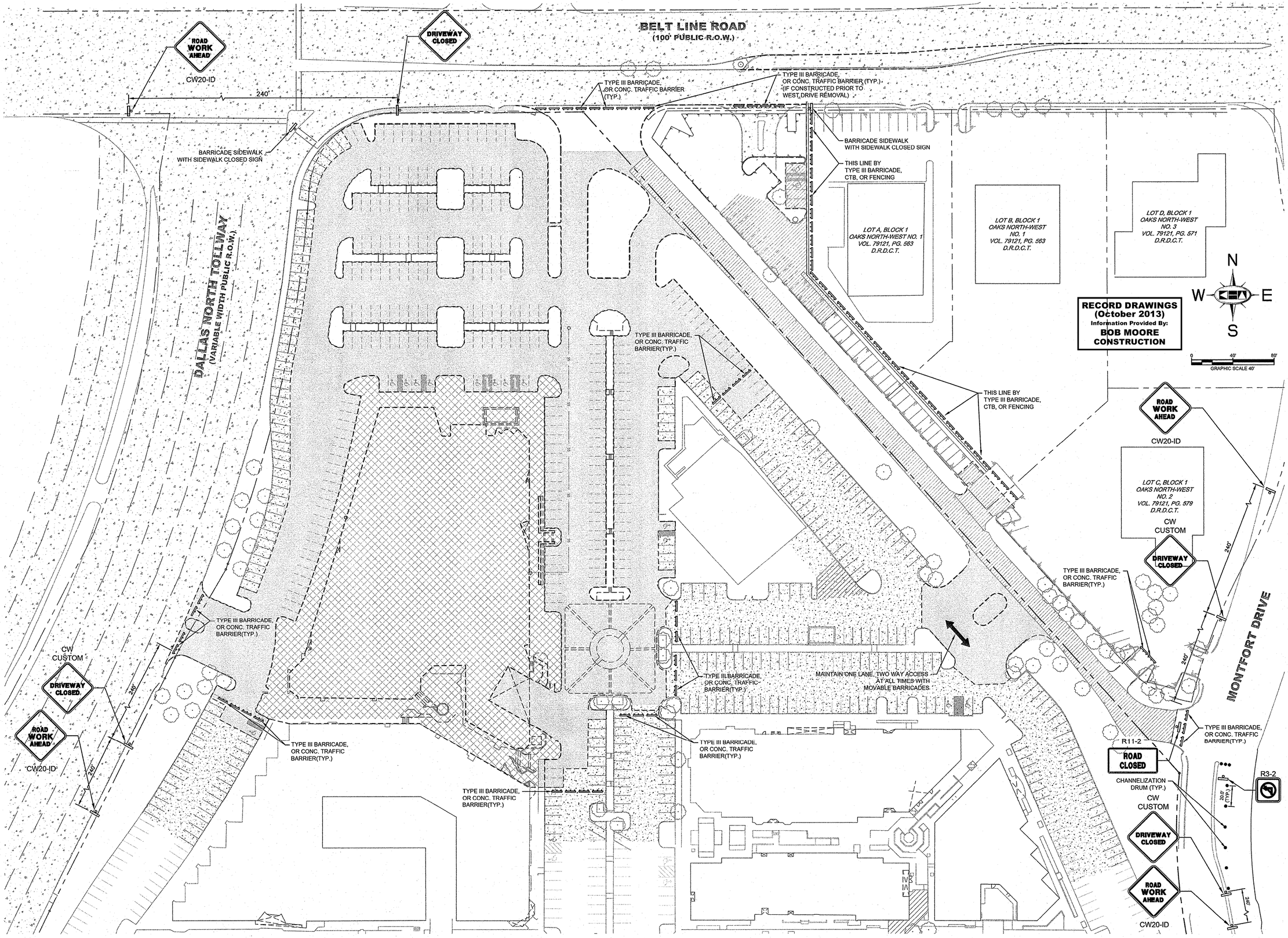

No.	REVISIONS	DATE	BY

Kimley-Horn and Associates, Inc.
State of Texas Registration No. F-928
5750 GENESIS COURT, SUITE 200, FRISCO, TX 75034
PHONE: 972-335-3580 FAX: 972-335-3779
WWW.KIMLEY-HORN.COM

STATE OF TEXAS
ROY BRASWELL
104908
LICENSED
PROFESSIONAL ENGINEER
9/27/12

KHA PROJECT	063319003S
DATE	9/27/2012
SCALE	AS SHOWN
DESIGNED BY	TBB
DRAWN BY	AAE
CHECKED BY	TBB

VILLAGE ON THE PARKWAY
ADDISON, TEXAS

ON-SITE TRAFFIC CONTROL PLAN

SHEET NUMBER
C-16

PLOTTED BY BAUERDICK, MICHAL 9/27/2012 8:54 AM
DWG NAME K:\DFW_CIV\063319003-VOP\DWG\PLAN SET\C-16-TCP-ONSITE.DWG (C-16 TRAFFIC CONTROL PLAN ONSITE)
LAST SAVED 9/27/2012 8:51 AM
This document, together with the concepts and designs presented herein, as an instrument of service, is intended only for the specific purpose and client for which it was prepared. Reuse of and improper reliance on this document without written authorization and adaptation by Kimley-Horn and Associates, Inc. shall be without liability to Kimley-Horn and Associates, Inc.

STORM SEWER – GENERAL NOTES:

1. ALL CONCRETE DRAINAGE STRUCTURES SHALL BE CLASS C CONCRETE MINIMUM.
2. ALL CRUSHED STONE SHALL BE 3/4", PASSING #4 SIEVE (GRADE 4).
3. ALL FIELD JOINTS WILL BE APPROVED BY THE TOWN ENGINEER IF NECESSARY. FIELD JOINTS SHALL BE WIPED ON THE INSIDE AND OUTSIDE TO PROVIDE FOR SMOOTH FLOW OF WATER.
4. RAMNECK COMPOUND OR APPROVED EQUAL SHALL BE USED FOR JOINT SEALS.
5. ALL STORM SEWER PIPE SHALL BE CAMERA INSPECTED AFTER THE INSTALLATION OF ALL PAVING AND UTILITIES AND PRIOR TO FINAL ACCEPTANCE OF THE PROJECT.

Addison! PUBLIC WORKS DEPARTMENT | STORM SEWER GENERAL NOTES | STANDARD CONSTRUCTION DETAILS STORM DRAINAGE | DATE: AUGUST, 2010 | REV DATE: – | SHEET : SD-001

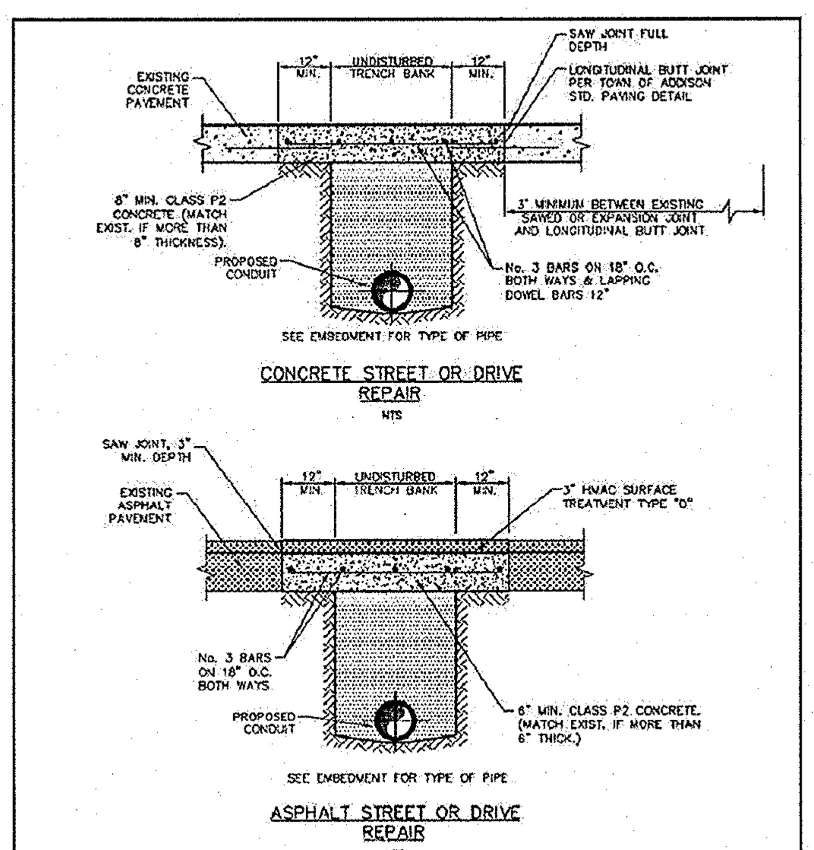

NOTES:
1. ALL JOINTS SHALL BE PARALLEL OR PERPENDICULAR TO THE DIRECTION OF TRAVEL.

Addison! PUBLIC WORKS DEPARTMENT | CONCRETE & ASPHALT STREET & DRIVE REPAIR | STANDARD CONSTRUCTION DETAILS STORM DRAINAGE | DATE: AUGUST, 2010 | REV DATE: – | SHEET : SD-002

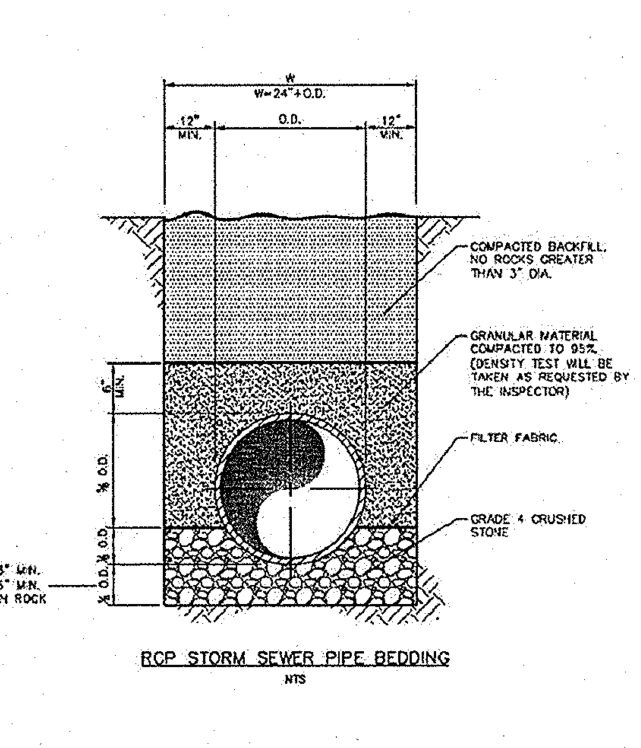

NOTE:
1. THE DEPTH OF TRENCH BELOW THE PROPOSED CONDUIT SHALL BE AS FOLLOWS:
   - 3" MIN. FOR 27" PIPE & SMALLER.
   - 4" MIN. FOR 30" TO 60" PIPE.
   - 6" MIN. FOR 66" PIPE OR LARGER.

Addison! PUBLIC WORKS DEPARTMENT | RCP STORM SEWER PIPE BEDDING | STANDARD CONSTRUCTION DETAILS STORM DRAINAGE | DATE: AUGUST, 2010 | REV DATE: – | SHEET : SD-003

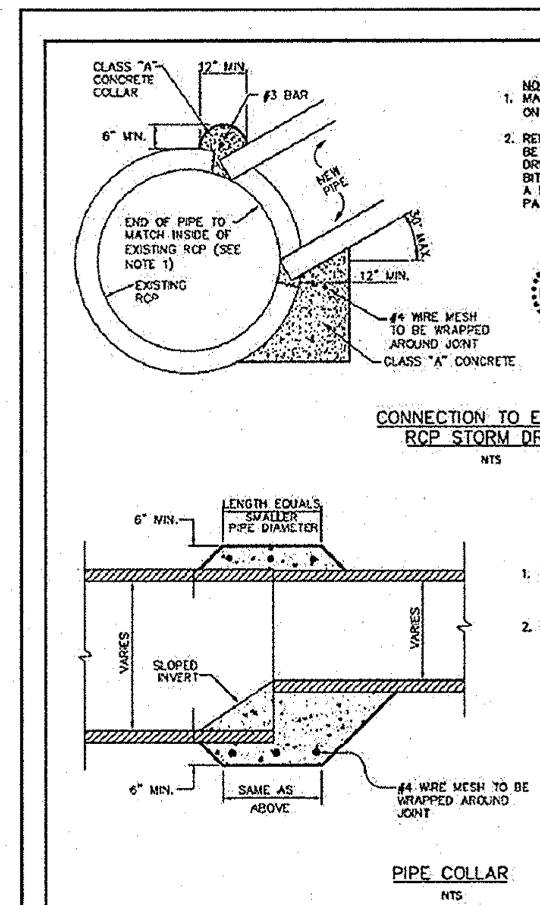

NOTES:
1. MAXIMUM DIAMETER OF NEW PIPE EQUALS ONE HALF OF EXISTING PIPE'S DIAMETER.
2. REMOVAL OF PLUG FROM EXISTING RCP TO BE ACCOMPLISHED BY USING A MASONRY DRILL AT A SPACING EQUAL TO THE DRILL BIT DIAMETER IN A CIRCULAR PATTERN OR A MASONRY SAW IN AN OCTAGONAL PATTERN PER DETAIL.

NOTES:
1. THIS PROCEDURE/DETAIL WILL ONLY BE USED WHEN A PREFAB REDUCTION IS NOT POSSIBLE.
2. CONCRETE SHALL BE CLASS A.

Addison! PUBLIC WORKS DEPARTMENT | CONNECTION TO EXISTING RCP STORM DRAIN PIPE COLLAR | STANDARD CONSTRUCTION DETAILS STORM DRAINAGE | DATE: AUGUST, 2010 | REV DATE: – | SHEET : SD-005

NOTE:
SEE TOWN OF ADDISON STD. FRAME AND COVER DETAIL.

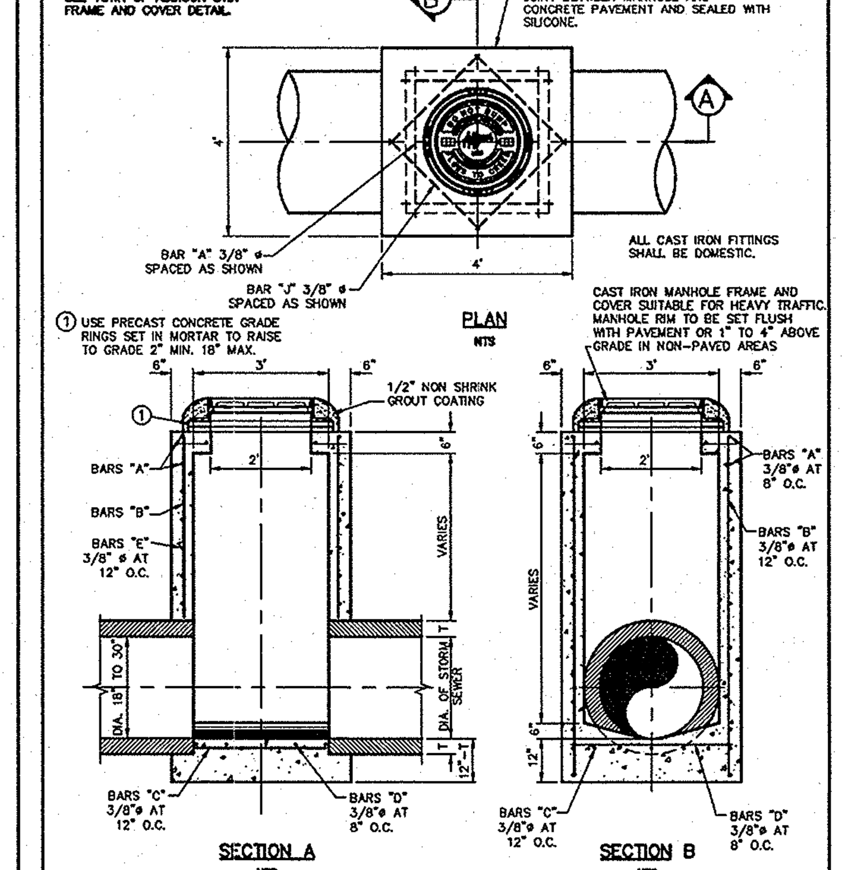

Addison! PUBLIC WORKS DEPARTMENT | TYPE "A" STORM SEWER MANHOLE (FOR 18" TO 30" RCP) | STANDARD CONSTRUCTION DETAILS STORM DRAINAGE | DATE: AUGUST, 2010 | REV DATE: – | SHEET : SD-006

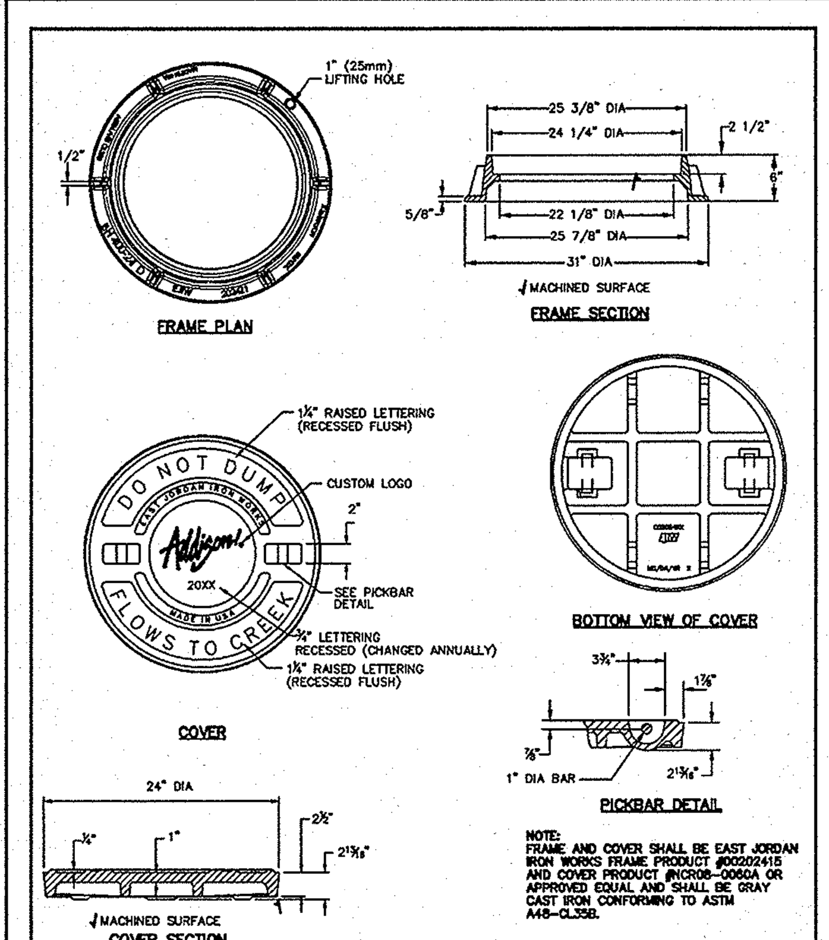

NOTE:
FRAME AND COVER SHALL BE EAST JORDAN IRON WORKS FRAME PRODUCT #00202415 AND COVER PRODUCT #NCR08-0060A OR APPROVED EQUAL AND SHALL BE GRAY CAST IRON CONFORMING TO ASTM A48-CL35B.

Addison! PUBLIC WORKS DEPARTMENT | STORM MANHOLE FRAME & COVER | STANDARD CONSTRUCTION DETAILS STORM DRAINAGE | DATE: AUGUST, 2010 | REV DATE: – | SHEET : SD-008

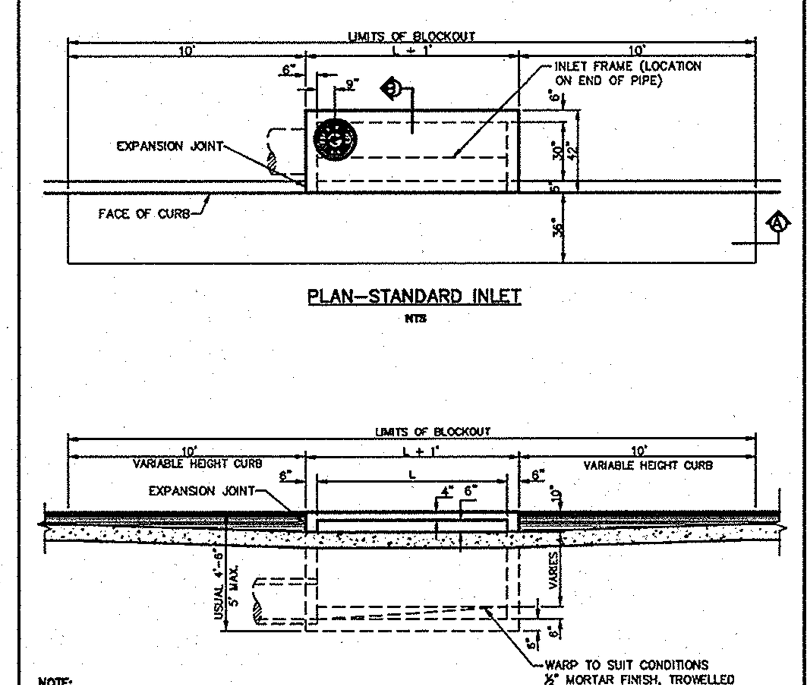

NOTE:
1. PIPE MAY BE PLACED IN ANY WALL, BUT SHALL NOT ENTER ANY CORNER OR BOTTOM.
2. #3 BAR 18" O.C.E.W. IN BLOCK OUT DRILLED INTO EXISTING CONCRETE.
3. BACKFILL AROUND INLET SHALL BE FLOWABLE BACKFILL PER NCTCOG 504.2.3.4

Addison! PUBLIC WORKS DEPARTMENT | STANDARD CURB INLET | STANDARD CONSTRUCTION DETAILS STORM DRAINAGE | DATE: AUGUST, 2010 | REV DATE: – | SHEET : SD-010

NOTE:
REINFORCEMENT SHOWN IS ADDITIONAL FOR SPECIAL CONDITION, FOR REMAINDER OF REINFORCEMENT SEE SECTIONS.

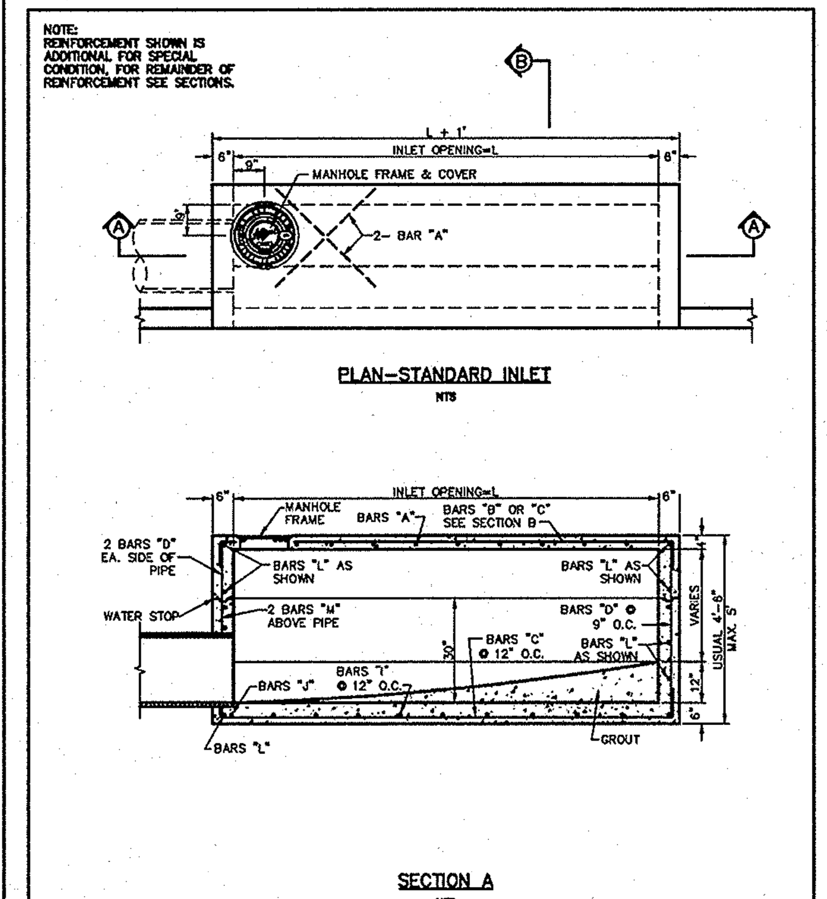

Addison! PUBLIC WORKS DEPARTMENT | STANDARD CURB INLET 4, 6, 8 & 10 FOOT INLETS | STANDARD CONSTRUCTION DETAILS STORM DRAINAGE | DATE: AUGUST, 2010 | REV DATE: – | SHEET : SD-012

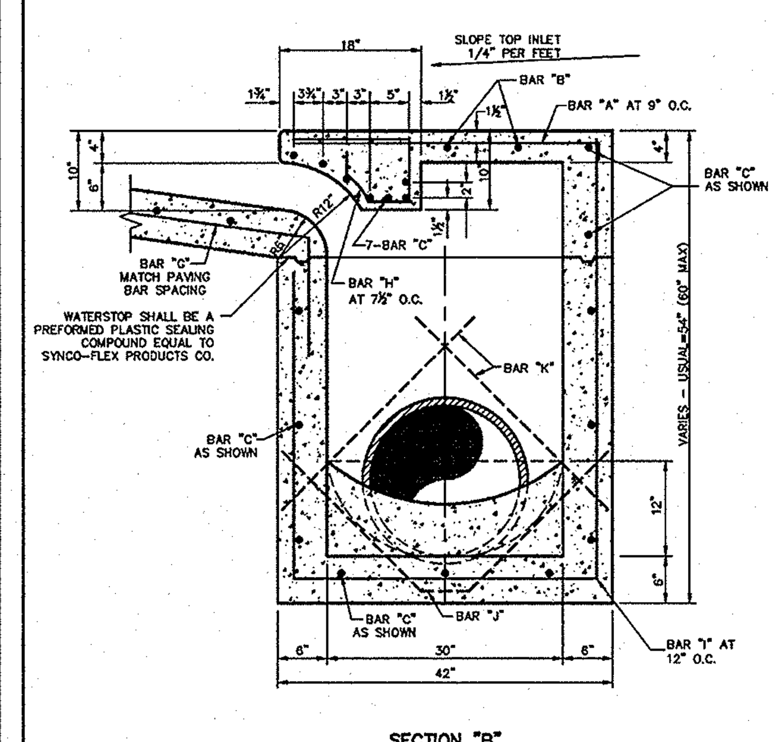

Addison! PUBLIC WORKS DEPARTMENT | TYPICAL SECTION "B" STANDARD & RECESSED CURB INLETS (4, 6, 8 & 10 FOOT INLETS) | STANDARD CONSTRUCTION DETAILS STORM DRAINAGE | DATE: AUGUST, 2010 | REV DATE: – | SHEET : SD-013

REINFORCING STEEL SCHEDULE
DIMENSIONS SHOWN ARE FOR MAXIMUM SIZE INLET

INLET LENGTH	BAR TYPE	BAR DIA. (1/8")	NO REQ'D	BAR DIMENSIONS A	B	C
4'	A	3	6	3'-2"	0'-3"	–
	B	3	2	2'-10"	–	–
	C	4	18	4'-8"	0'-6"	–
	D	4	9	4'-8"	–	–
	G	3	4	2'-0"	1'-3"	–
	H	3	7	*	*	*
	I	4	3	3'-2"	3'-2"	4'-8"
	J	5	1	*	*	*
	K	5	2	3'-2"	0'-6"	–
	L	4	11	3'-2"	0'-6"	–
	M	4	2	3'-0"**	–	–
6'	A	3	9	3'-2"	0'-3"	–
	B	3	2	4'-10"	–	–
	C	4	18	6'-8"	0'-6"	–
	D	4	9	4'-8"	–	–
	G	3	6	2'-0"	1'-3"	–
	H	3	11	*	*	*
	I	4	5	3'-2"	3'-2"	4'-8"
	J	5	1	*	*	*
	K	5	2	3'-2"	0'-6"	–
	L	4	11	3'-2"	0'-6"	–
	M	4	2	3'-0"**	–	–
8'	A	3	12	3'-2"	0'-3"	–
	B	3	2	6'-10"	–	–
	C	4	18	8'-8"	0'-6"	–
	D	4	9	4'-8"	–	–
	G	3	7	2'-0"	1'-3"	–
	H	3	14	*	*	*
	I	4	7	3'-2"	3'-2"	4'-8"
	J	5	1	*	*	*
	K	5	2	3'-2"	0'-6"	–
	L	4	11	3'-2"	0'-6"	–
	M	4	2	3'-0"**	–	–
10'	A	3	15	3'-2"	0'-3"	–
	B	3	2	8'-10"	–	–
	C	4	18	10'-8"	0'-6"	–
	D	4	9	4'-8"	–	–
	G	3	9	2'-0"	1'-3"	–
	H	3	17	*	*	*
	I	4	9	3'-2"	3'-2"	4'-8"
	J	5	1	*	*	*
	K	5	2	3'-2"	0'-6"	–
	L	4	11	3'-2"	0'-6"	–
	M	4	2	3'-0"**	–	–

* SEE DIAGRAM FOR DIMENSIONS
** FIELD CUT AS REQUIRED TO ACCOMMODATE DRAIN PIPE

Addison! PUBLIC WORKS DEPARTMENT | REINFORCING STEEL SCHEDULE 4, 6, 8 & 10 FOOT INLETS | STANDARD CONSTRUCTION DETAILS STORM DRAINAGE | DATE: AUGUST, 2010 | REV DATE: – | SHEET : SD-014

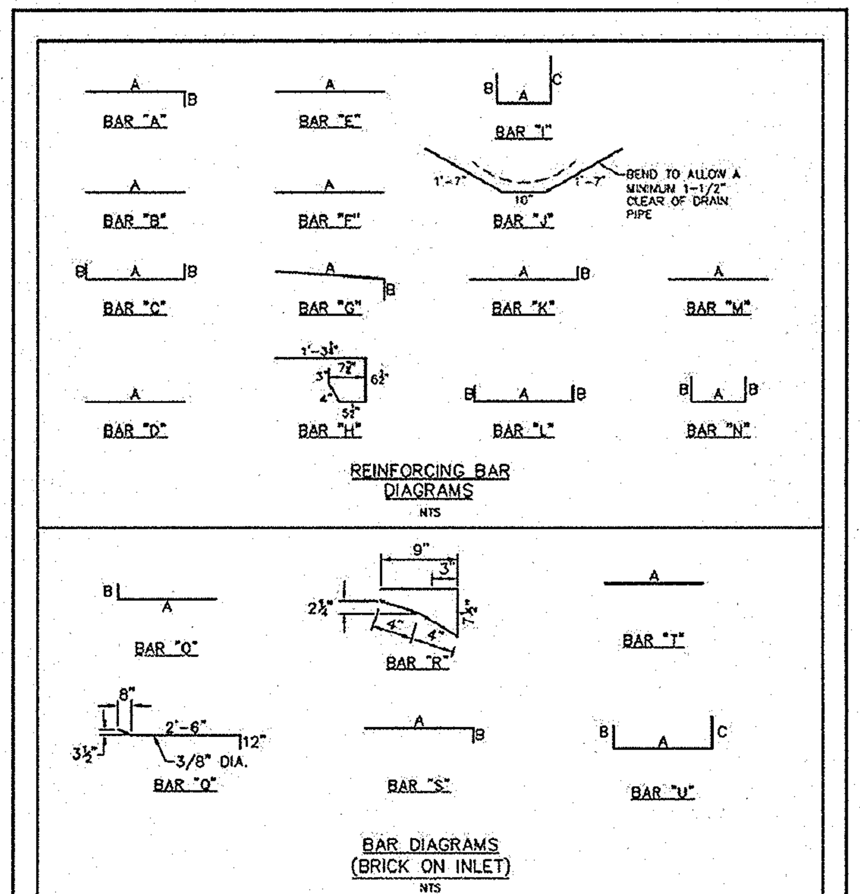

NOTE:
BAR DESIGNATIONS AND DIMENSIONS ARE DIFFERENT FROM STEEL SCHEDULE FOR REGULAR INLETS.

Addison! PUBLIC WORKS DEPARTMENT | REINFORCING BAR DIAGRAMS | STANDARD CONSTRUCTION DETAILS STORM DRAINAGE | DATE: AUGUST, 2010 | REV DATE: – | SHEET : SD-022

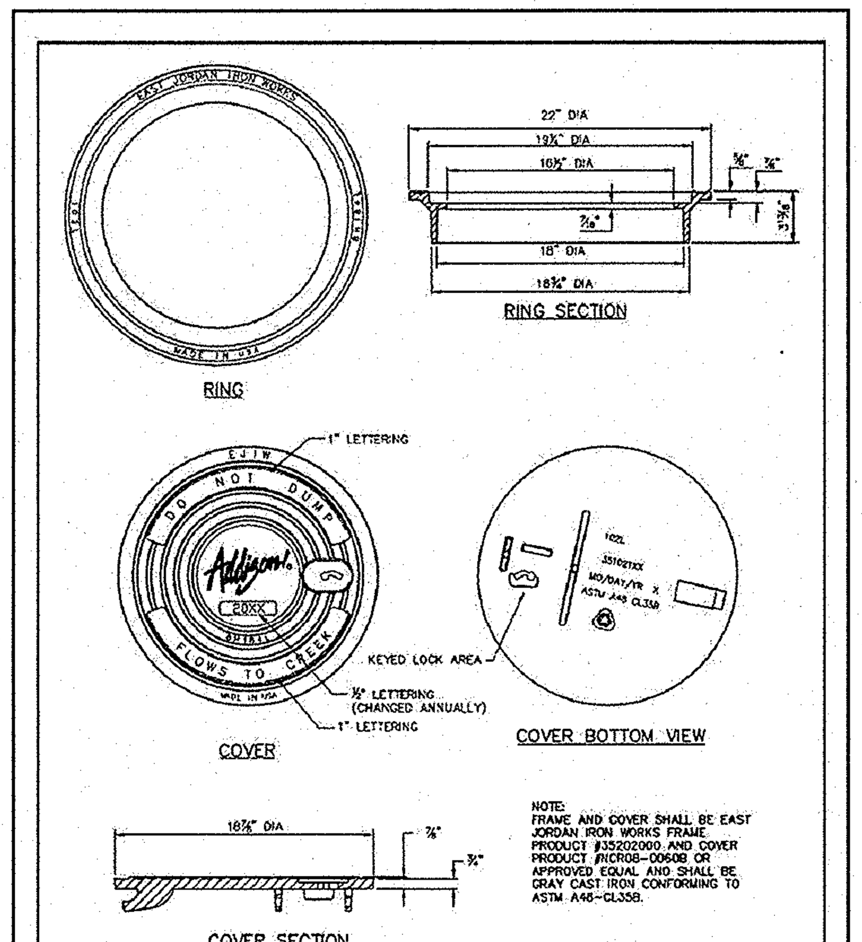

NOTE:
FRAME AND COVER SHALL BE EAST JORDAN IRON WORKS FRAME PRODUCT #35202000 AND COVER PRODUCT #NCR08-00608 OR APPROVED EQUAL AND SHALL BE GRAY CAST IRON CONFORMING TO ASTM A48-CL35B.

Addison! PUBLIC WORKS DEPARTMENT | INLET FRAME & COVER | STANDARD CONSTRUCTION DETAILS STORM DRAINAGE | DATE: AUGUST, 2010 | REV DATE: – | SHEET : SD-024

■ Note: The suggested forming procedures shown in this catalog are general suggestions to qualified professionals and may not be appropriate for every installation.

R-4995 – R-4996
Type M Trench Frame with Solid or Grated Cover

Heavy Duty

Cast Iron Trench Assemblies—Light or Heavy Duty—For Use in Sidewalks, Driveways, Garages, Loading Docks, etc.

Read Carefully Before Ordering
Specify:
1. Complete catalog number.
2. Light or heavy duty.
3. Overall length of cover required.
4. Lid solid, flat grated, or diagonally barred convex grate.
5. Location of outlet, side, bottom or end (give dimensional location and pipe size).
6. Whether one end or both ends

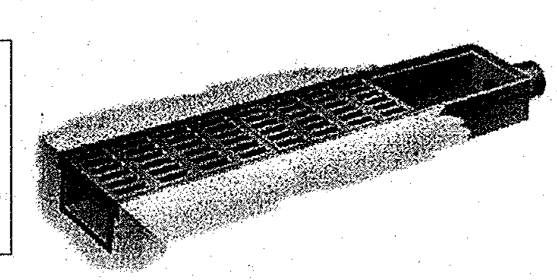

Illustrating Type M frame with grated cover. Standard with 4-inch outside caulk outlet. Can be equipped for inside caulk if specified.

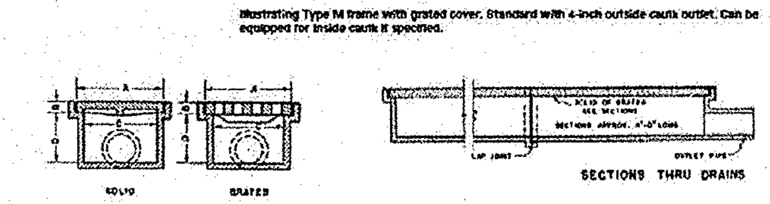

Trench covers are used over areas requiring long drainage assemblies. Can be supplied in a variety of sizes and lengths to meet special needs. For trenches of irregular pattern, arrangements can be made to furnish cover to fit.

Standard 4-inch outlet at end of drain. Special size outlets are available on special order. Side and bottom outlets optional and furnished only when specified.

Sections: Thru Drains, Type M

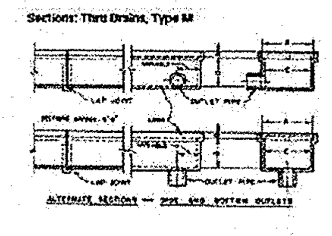

Catalog No.	Description	A	B	C	D	Length
	Standard Sizes—Light Duty					
R-4995-A1**	With grated cover	11¼	3/4	10	6¼	As ordered
R-4995-A2*	With grated cover	7	3/4	5	4¼	As ordered
R-4995-B1	With solid cover	11¼	3/4	10	6¼	As ordered
R-4995-B2	With solid cover	7	3/4	5	3¼	As ordered
	Standard Sizes—Heavy Duty					
R-4996-A1**	With grated cover	11¼	1¼	10	6	As ordered
R-4996-A2*	With grated cover	7	1¼	5	4¼	As ordered
R-4996-B1	With solid cover	11¼	1¼	10	6	As ordered
R-4996-B2	With solid cover	7	1¼	5	4¼	As ordered

Above Standard Frames made in 4 ft. sections, covers in 2 ft. lengths.
*Available with Type B grate only.
**Also available with Type P grate.

RECORD DRAWINGS
(October 2013)
Information Provided By:
BOB MOORE CONSTRUCTION

No.	REVISIONS	DATE	BY

Kimley-Horn and Associates, Inc.
State of Texas Registration No. F-928
5750 GENESIS COURT, SUITE 200, FRISCO, TX 75034
PHONE: 972-335-3580 FAX: 972-335-3779
WWW.KIMLEY-HORN.COM

STATE OF TEXAS – ROY BRASWELL – 104908 – LICENSED PROFESSIONAL ENGINEER – 9/27/12

KHA PROJECT 063319038
DATE 9/27/2012
SCALE AS SHOWN
DESIGNED BY TBB
DRAWN BY AAE
CHECKED BY TBB

VILLAGE ON THE PARKWAY
ADDISON, TEXAS

TOWN OF ADDISON STORM DRAINAGE DETAILS

SHEET NUMBER
C-17

This document, together with the concepts and designs presented herein, as an instrument of service, is intended only for the specific purpose and client for which it was prepared. Reuse of and improper reliance on this document without written authorization and adaptation by Kimley-Horn and Associates, Inc. shall be without liability to Kimley-Horn and Associates, Inc.

PLOTTED BY MAURICIO, MARLA 9/27/2012 8:59 AM
DWG NAME K:\FRI_CIVIL\63319038-VOP\DWG\PLAN SET\C-17-TOA-DRNG-DETS.DWG [C-17 TOWN OF ADDISON STORM DRAINAGE DETAILS]
LAST SAVED 8/28/2012 2:06 PM

PAVING – GENERAL NOTES

1. GENERAL:
   PAVEMENT THICKNESS IS AS SHOWN IN ITEM 7. SUBGRADE DESIGN SHALL CONFORM TO TOWN OF ADDISON PUBLIC WORKS REQUIREMENTS IN ITEM 3, AND SHALL EXTEND 12" MIN. BEHIND THE BACK OF CURB.
2. REINFORCED CONCRETE PAVEMENT:
   A. CONCRETE STRENGTH SHALL BE AS SHOWN IN ITEM 7 (NCTCOG LATEST EDITION).
   B. ALL CURBS SHALL BE INTEGRAL WITH PAVEMENT AND SHALL BE OF THE SAME STRENGTH AS CONCRETE PAVEMENT.
   C. DETAIL AND ARRANGEMENT OF PAVEMENT JOINTS, ALL TYPES, SHALL BE AS SHOWN ON THE TOWN STANDARD CONSTRUCTION DETAILS.
   D. END LAPS SHALL BE THIRTY DIAMETERS.
   E. REINFORCING STEEL SHALL BE #3 REBAR (3/8") ON 18" CENTERS FOR 8" OR LESS. #4 FOR 10" OR ABOVE
3. SUBGRADE:
   SUBGRADE UNDER ALL PAVEMENT SHALL BE 6" THICK AND SHALL BE STABILIZED WITH AT LEAST 50 LBS. PER SQ. YD. HYDRATED LIME, COMPACTED TO A DENSITY NOT LESS THAN 95 PERCENT LABORATORY DENSITY. PRIOR TO PLACING LIME, SUBGRADE SHALL BE PROTOTYPED FOR APPROVAL TO DETERMINE AMOUNT OF LIME REQUIRED. LABORATORY TEST MAY BE WAIVED PROVIDED AT LEAST 36 LBS. OF LIME PER SQ. YD. IS USED. SEE NCTCOG ITEM 301.2 "LIME TREATMENT". FLEXIBLE BASE (CRUSHED STONE/GRAVEL) FOR NCTCOG ITEM 301.5 MAY BE SUBSTITUTED FOR LIME TREATMENT WITH THE APPROVAL OF THE TOWN ENGINEER.
4. REBAR SHALL BE SUPPORTED BY BAR CHAIRS OR OTHER DEVICES APPROVED BY TOWN ENGINEER.
5. NO TRAFFIC ON FINISHED SUBGRADE SHALL BE PERMITTED AFTER REINFORCING STEEL IS INSTALLED ABOVE SUBGRADE. NO TRAFFIC SHALL BE PERMITTED BEFORE OR DURING THE PLACING OF CONCRETE.
6. CROSS SLOPE OF STRAIGHT CROWN STREETS SHALL BE 1/4" PER FOOT UNLESS APPROVED BY THE TOWN ENGINEER.
7. PAVEMENT THICKNESS AND STRENGTHS SHALL BE AS FOLLOWS:
   MAJOR ARTERIAL – 10" CLASS "P1" OR "P2."
   MINOR ARTERIAL – 8" CLASS "P1" OR "P2."
   COMMERCIAL/INDUSTRIAL COLLECTOR – 8" CLASS "P1" OR "P2."
   RESIDENTIAL COLLECTOR – 8" CLASS "P1" OR "P2."
   RESIDENTIAL LOCAL – 8" CLASS "P1" OR "P2."
   SIDEWALK AND DFW=1'-0"CLASS "A"
   DRIVE APPROACH–8"–CLASS "P2"
   ALLEY–6" CLASS "P1" OR "P2."
8. CONCRETE MIX DESIGN SHALL BE AS DEFINED BY NCTCOG 303.3.
9. ALL MEDIANS AND PARKWAYS SHALL BE PROVIDED WITH BERMUDA GROUND COVER.
10. ONCE A CURB ABUTTING A THOROUGHFARE HAS BEEN SAWCUT AND REMOVED, THE CONTRACTOR MUST REPLACE THE CONCRETE WITH A NEW POUR (i.e. DRIVEWAY) WITHIN 14 CALENDAR DAYS. LIQUIDATED DAMAGES WILL BE ASSESSED AT $500 PER DAY FOR EACH CALENDAR DAY IN EXCESS OF 14 CALENDAR DAYS. PAVEMENT SHALL BE MADE PRIOR TO ACCEPTANCE OR ISSUANCE OF A CERTIFICATE OF OCCUPANCY.
11. ALL SIDEWALKS AND ACCESSIBLE ROUTES SHALL HAVE A MAXIMUM LONGITUDINAL SLOPE OF 5% AND A MAXIMUM CROSS SLOPE OF 2%.
12. ALLEYS AND DRIVEWAYS
    A. CONCRETE FOR ALLEY RETURNS AND DRIVEWAYS SHALL HAVE A MINIMUM COMPRESSIVE STRENGTH AT 28 DAYS IDENTICAL TO THAT SPECIFIED FOR THE STREET PAVEMENT OR BASE WHEN BUILT AS COMPONENTS OF A CONCRETE PAVING PROJECT. WHEN BUILT SEPARATELY, THE STRENGTH SHALL BE AS SPECIFIED ON THE CONSTRUCTION PLAN.
    B. SPACING AND CONSTRUCTION OF JOINTS SHALL CONFORM TO PARABOLIC STREET PAVEMENT.

Addison! PUBLIC WORKS DEPARTMENT | PAVING GENERAL NOTES | STANDARD CONSTRUCTION DETAILS PAVING | DATE: AUGUST, 2010 | REV DATE: – | SHEET: S0-750

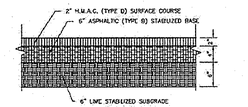

ASPHALT PAVING CROSS SECTION

NOTE:
CUT OF 8" INTO EXISTING PAVEMENT IS REQUIRED FOR CONSTRUCTION JOINT WITH NEW POURS TO GET A SMOOTH FINISH.

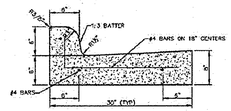

Addison! PUBLIC WORKS DEPARTMENT | CURB AND GUTTER & ASPHALT PAVING CROSS SECTION | STANDARD CONSTRUCTION DETAILS PAVING | DATE: AUGUST, 2010 | REV DATE: – | SHEET: S0-751

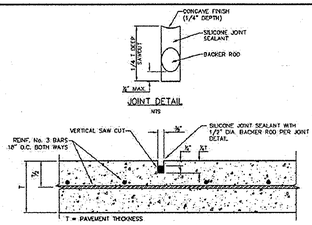

JOINT DETAIL
NTS

SAWED DUMMY JOINTS
NTS

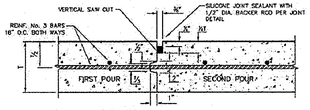

NOTE: CONTRACTOR SHALL PROTECT KEYWAY PRIOR TO SECOND POUR. IF LONGITUDINAL KEYWAY IS DAMAGED, CONTRACTOR SHALL REPAIR WITH THE USE OF LONGITUDINAL BUTT JOINT, DRILL AND GROUT DOWELS INTO FIRST POUR.

CONSTRUCTION JOINTS FOR PAVEMENT
NTS

TRANSVERSE AND LONGITUDINAL JOINTS

Addison! PUBLIC WORKS DEPARTMENT | JOINT DETAILS | STANDARD CONSTRUCTION DETAILS PAVING | DATE: AUGUST, 2010 | REV DATE: – | SHEET: S0-752

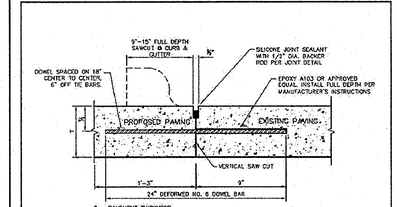

NOTES:
1. NO. 3 DEFORMED BAR MAY BE USED IN 6 INCH PAVEMENT.
2. LONGITUDINAL BUTT CONSTRUCTION MAY BE UTILIZED IN PLACE OF LONGITUDINAL HINGED (KEYWAY) JOINT AT CONTRACTORS OPTION.
3. DOWEL BARS SHALL BE DRILLED INTO EXISTING PAVEMENT WITH AN EPOXY BONDING AGENT.
4. DRILLING BY HAND IS NOT ACCEPTABLE. PUSHING DOWEL BARS INTO GREEN CONCRETE IS NOT ACCEPTABLE.

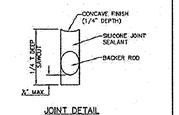

JOINT DETAIL
NTS

LONGITUDINAL BUTT JOINT
NTS

Addison! PUBLIC WORKS DEPARTMENT | LONGITUDINAL BUTT JOINT | STANDARD CONSTRUCTION DETAILS PAVING | DATE: AUGUST, 2010 | REV DATE: – | SHEET: S0-753

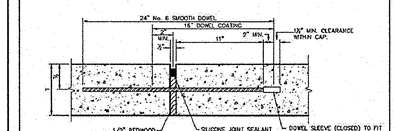

NOTES:
1. DOWELS AND REINFORCING BARS SHALL BE SUPPORTED BY AN APPROVED DEVICE AND MUST BE TIED OR CHAIRED ON EACH SIDE.
2. DOWELS MUST BE PERPENDICULAR TO FACE OF PAVEMENT.
3. NO. 3 DEFORMED DOWEL BARS MAY BE USED IN 6" PAVEMENT.
4. TRANSVERSE EXPANSION JOINTS SHALL HAVE A MAXIMUM SPACING OF 600 FT.
5. TRANSVERSE EXPANSION JOINTS SHALL BE LOCATED AT INTERSECTIONS.

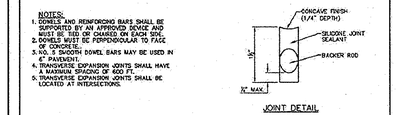

JOINT DETAIL
NTS

TRANSVERSE EXPANSION JOINT
N.T.S.

Addison! PUBLIC WORKS DEPARTMENT | TRANSVERSE EXPANSION JOINT | STANDARD CONSTRUCTION DETAILS PAVING | DATE: AUGUST, 2010 | REV DATE: – | SHEET: S0-754

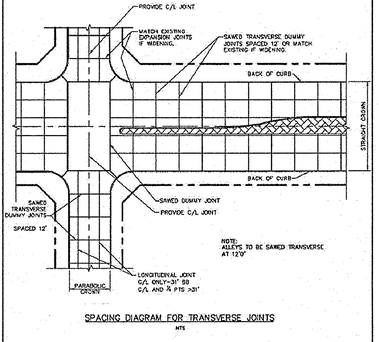

SPACING DIAGRAM FOR TRANSVERSE JOINTS
NTS

Addison! PUBLIC WORKS DEPARTMENT | SPACING DIAGRAM FOR TRANSVERSE JOINTS | STANDARD CONSTRUCTION DETAILS PAVING | DATE: AUGUST, 2010 | REV DATE: – | SHEET: S0-761

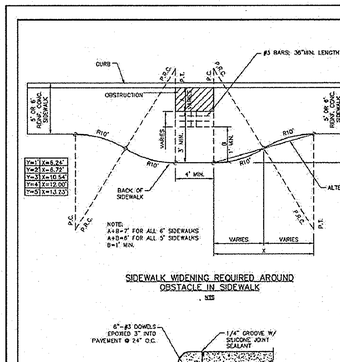

SIDEWALK WIDENING REQUIRED AROUND OBSTACLE IN SIDEWALK
NTS

JOINT DETAIL FOR SIDEWALKS ADJACENT TO CURB
NTS

Addison! PUBLIC WORKS DEPARTMENT | SIDEWALK WIDENING REQUIRED AROUND OBSTACLE IN SIDEWALK & JOINT DETAIL FOR SIDEWALKS ADJACENT TO CURB | STANDARD CONSTRUCTION DETAILS PAVING | DATE: AUGUST, 2010 | REV DATE: – | SHEET: S0-762

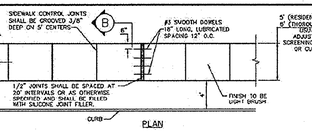

PLAN
NTS

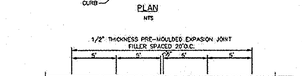

SECTION A
NTS

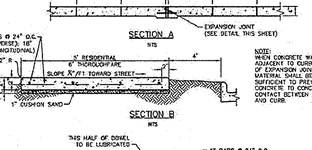

SECTION B
NTS

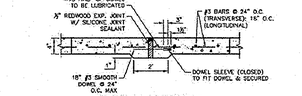

EXPANSION JOINT DETAIL
NTS

Addison! PUBLIC WORKS DEPARTMENT | CONCRETE SIDEWALK | STANDARD CONSTRUCTION DETAILS PAVING | DATE: AUGUST, 2010 | REV DATE: – | SHEET: S0-763

GENERAL NOTES FOR PEDESTRIAN FACILITIES

1. ALL SLOPES ARE MAXIMUM ALLOWABLE. THE LEAST POSSIBLE SLOPE THAT WILL STILL ACHIEVE THE DESIRED RESULT SHOULD BE USED. ADJUST CURB RAMP LENGTH OR GRADE OF APPROACH SIDEWALKS AS DIRECTED.
2. LANDINGS SHALL BE 1/50 MINIMUM WITH A MAXIMUM 2% SLOPE IN ANY DIRECTION.
3. MANEUVERING SPACE AT THE BOTTOM OF CURB RAMPS SHALL BE A MINIMUM OF 4'X4' WHOLLY CONTAINED WITHIN THE CROSSWALK AND WHOLLY OUTSIDE THE PARALLEL VEHICULAR TRAVEL PATH.
4. THE MAXIMUM ALLOWABLE CROSS SLOPE ON SIDEWALK AND CURB RAMP SURFACES IS 2%.
5. CURB RAMPS WITH FLARED SIDES MAY BE USED ONLY WHERE PEDESTRIANS WOULD NOT NORMALLY WALK ACROSS THE RAMP, EITHER BECAUSE THE ADJACENT SURFACE IS PLANTING OR OTHER NON-WALKING SURFACE OR BECAUSE THE SITE APPROACH IS SUBSTANTIALLY OBSTRUCTED. OTHERWISE, PROVIDE FLARED SIDES.
6. ADDITIONAL EXPLANATION ON CURB RAMP LOCATION, DESIGN, LIGHT REFLECTIVE VALUE (LRV) AND TEXTURE MAY BE FOUND IN THE CURRENT EDITION OF THE TEXAS ACCESSIBILITY STANDARDS (TAS) AND TDLR'S TAS FAQS.
7. CURB RAMPS SHALL BE ALIGNED WITH THEORETICAL CROSSWALKS, OR AS DIRECTED BY THE TOWN ENGINEER.
8. HANDRAILS ARE NOT REQUIRED ON CURB RAMPS. PROVIDE CURB RAMPS WHEREVER ON ACCESSIBLE ROUTE CROSSES (INTERSECTS) A CURB.
9. CURB RAMPS SHALL BE PLACED WITHIN THE LIMITS ALONG CURB LINE.
10. BURNER FREE RAMPS SHALL BE CONSTRUCTED IN ACCORDANCE WITH THE CURRENT EDITION OF THE TEXAS ACCESSIBILITY STANDARDS (TAS).
11. ALL BURNER FREE RAMPS MUST PASS AN INDEPENDENT INSPECTION. A LETTER OF COMPLIANCE ACCEPTANCE IS REQUIRED PRIOR TO FINAL ACCEPTANCE BY THE TOWN OF ADDISON.
12. STRETCH OR STEEP GRADE WILL REQUIRE LONGER TRANSITION OR UPGRADE SEC.
13. VERTICAL DISTANCE OF CURB RAMP SHALL NOT EXCEED 1" PER FOOT AT ANY LOCATION. VERTICAL DISTANCE BETWEEN STREET AND RAMP SHALL NOT EXCEED 3/8".

GENERAL NOTES FOR DETECTABLE WARNINGS

1. CURB RAMPS MUST CONTAIN A DETECTABLE WARNING SURFACE THAT CONSIST OF RAISED TRUNCATED DOMES COMPLYING WITH SECTION 4.29 OF THE TEXAS ACCESSIBILITY STANDARDS (TAS). THE SURFACE MUST CONTRAST VISUALLY WITH THE ADJOINING SURFACES, INCLUDING BRICK PAVERS. FURNISH DARK RED COLORED DETECTABLE WARNING SURFACE ADJACENT TO DARK, RED COLORED BRICK PAVERS. FURNISH RED COLORED DETECTABLE WARNING SURFACE ADJACENT TO DARK, RED COLORED BRICK PAVERS.
2. DETECTABLE WARNING SURFACES MUST BE SLIP RESISTANT AND NOT ALLOW WATER TO ACCUMULATE.
3. ALIGN TRUNCATED DOMES IN THE DIRECTION OF PEDESTRIAN TRAVEL WHEN ENTERING THE STREET.
4. DETECTABLE WARNING SURFACES SHALL BE A MINIMUM OF 24" IN DEPTH IN THE DIRECTION OF PEDESTRIAN TRAVEL, AND EXTEND THE FULL WIDTH OF THE CURB RAMP OR LANDING WHERE THE PEDESTRIAN ACCESS ROUTE ENTERS THE STREET.
5. DETECTABLE WARNING SURFACES SHALL BE LOCATED SO THAT THE EDGE NEAREST THE CURB LINE IS A MINIMUM OF 6" AND A MAXIMUM OF 8" FROM THE EXTENSION OF THE FACE OF CURB AND SHALL BE AN INTEGRAL PART OF THE WALKING SURFACE. DETECTABLE WARNING SURFACES MAY BE OMITTED ALONG THE CORNER RADIUS.

GENERAL NOTES FOR DETECTABLE WARNING PAVER UNITS

1. DETECTABLE WARNING PAVER UNITS SHALL MEET OR EXCEED ALL REQUIREMENTS OF ASTM C-936, C-33, AND BE LAID IN A TWO BY TWO UNIT BASKET WEAVE PATTERN OR AS DIRECTED.
2. LAY FULL-SIZE UNITS FIRST FOLLOWED BY CLOSURE UNITS CONSISTING OF AT LEAST 25 PERCENT OF A FULL UNIT. CUT DETECTABLE WARNING PAVER UNITS USING A POWER SAW.

Addison! PUBLIC WORKS DEPARTMENT | PEDESTRIAN FACILITIES GENERAL NOTES | STANDARD CONSTRUCTION DETAILS PAVING | DATE: AUGUST, 2010 | REV DATE: – | SHEET: S0-767

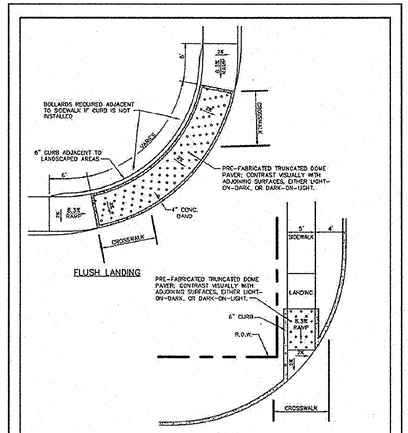

DIRECTIONAL RAMP WITHIN RADIUS

Addison! PUBLIC WORKS DEPARTMENT | PEDESTRIAN RAMPS | STANDARD CONSTRUCTION DETAILS PAVING | DATE: AUGUST, 2010 | REV DATE: – | SHEET: S0-768

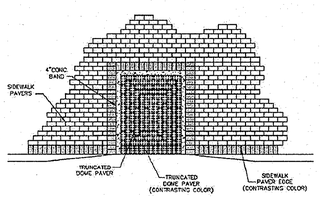

NOTE:
ALL PAVER COLORS TO BE APPROVED BY TOWN OF ADDISON.

Addison! PUBLIC WORKS DEPARTMENT | TYPICAL PATTERN FOR PAVER SIDEWALK AND CURB RAMP | STANDARD CONSTRUCTION DETAILS PAVING | DATE: AUGUST, 2010 | REV DATE: – | SHEET: S0-769

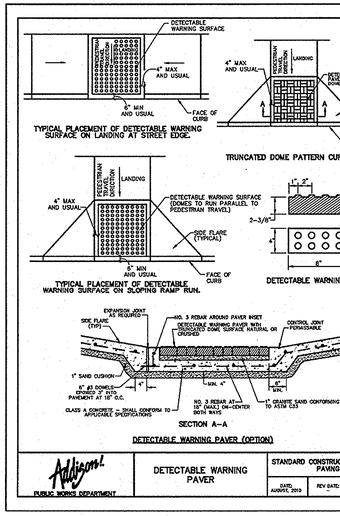

DETECTABLE WARNING PAVER (OPTION)

Addison! PUBLIC WORKS DEPARTMENT | DETECTABLE WARNING PAVER | STANDARD CONSTRUCTION DETAILS PAVING | DATE: AUGUST, 2010 | REV DATE: – | SHEET: S0-770

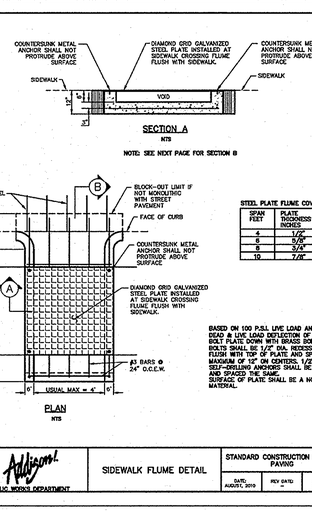

STEEL PLATE FLUME COVER	
SPAN FEET	PLATE THICKNESS INCHES
4	1/2"
6	5/16"
8	3/4"
10	7/8"

Addison! PUBLIC WORKS DEPARTMENT | SIDEWALK FLUME DETAIL | STANDARD CONSTRUCTION DETAILS PAVING | DATE: AUGUST, 2010 | REV DATE: – | SHEET: S0-771

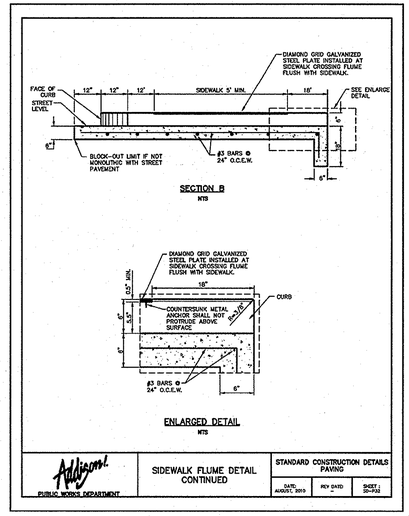

Addison! PUBLIC WORKS DEPARTMENT | SIDEWALK FLUME DETAIL CONTINUED | STANDARD CONSTRUCTION DETAILS PAVING | DATE: AUGUST, 2010 | REV DATE: – | SHEET: S0-772

RECORD DRAWINGS (October 2013)
Information Provided By:
BOB MOORE CONSTRUCTION

No.	REVISIONS	DATE	BY

Kimley-Horn and Associates, Inc.
State of Texas Registration No. F-928
5750 GENESIS COURT, SUITE 200, FRISCO, TX 75034
PHONE: 972-335-3580 FAX: 972-335-3779
WWW.KIMLEY-HORN.COM

STATE OF TEXAS ROY BRASWELL 104908 LICENSED PROFESSIONAL ENGINEER 9/20/12

KHA PROJECT	063319038
DATE	9/27/2012
SCALE	AS SHOWN
DESIGNED BY	TBB
DRAWN BY	AAE
CHECKED BY	TBB

VILLAGE ON THE PARKWAY
TOWN OF ADDISON PAVING DETAILS
ADDISON, TEXAS

SHEET NUMBER
C-18

PLOTTED BY MAURICIO, MARIA 9/20/2012 8:09 AM
DWG NAME K:\FRI_CIVIL\063319038\WORK\PLAN-SERVICE\TOA-PAVE-DETS.DWG [C-18 TOWN OF ADDISON PAVING DETAILS]
LAST SAVED 9/20/2012 4:47 PM
This document, together with the concepts and designs presented herein, as an instrument of service, is intended only for the specific purpose and client for which it was prepared. Reuse of and improper reliance on this document without written authorization and adaptation by Kimley-Horn and Associates, Inc. shall be without liability to Kimley-Horn and Associates, Inc.

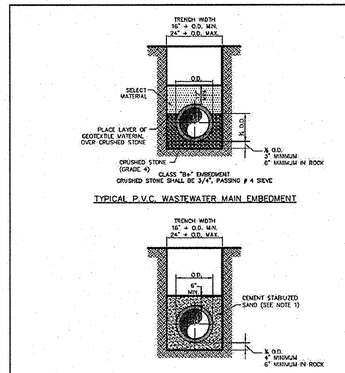

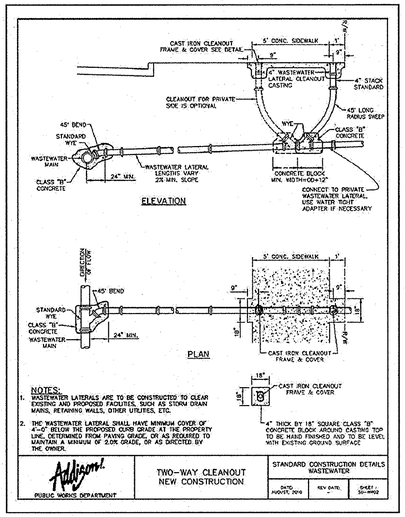

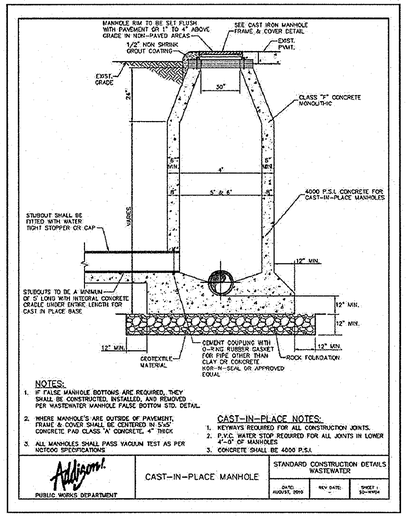

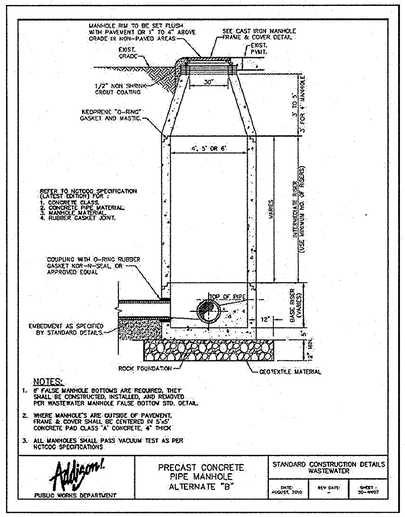

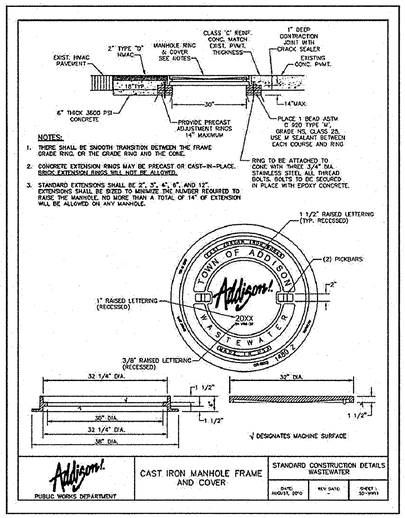

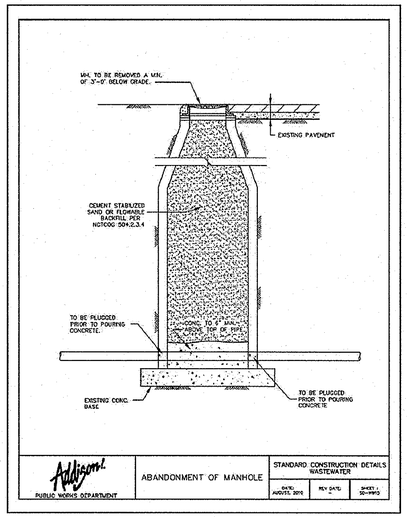

RECORD DRAWINGS (October 2013)
Information Provided By:
BOB MOORE CONSTRUCTION

No.	REVISIONS	DATE	BY

Kimley-Horn and Associates, Inc.
State of Texas Registration No. F-928
5750 GENESIS COURT, SUITE 200, FRISCO, TX 75034
PHONE: 972-335-3580 FAX: 972-335-3779
WWW.KIMLEY-HORN.COM

STATE OF TEXAS
ROY BRASWELL
104908
LICENSED PROFESSIONAL ENGINEER
9/27/12

KHA PROJECT 063319038
DATE 9/27/2012
SCALE AS SHOWN
DESIGNED BY TBB
DRAWN BY AAE
CHECKED BY TBB

VILLAGE ON THE PARKWAY
ADDISON, TEXAS

TOWN OF ADDISON WASTEWATER DETAILS

SHEET NUMBER
C-19

PLOTTED BY MAURICIO, MARIA, 9/27/2012 9:50 AM
DWG NAME K:\RFL_CIV\063319038-VOP\DWG\PLAN SET\C-19-TOA-WASTEWATER-DETS.DWG [C-19-TOWN OF ADDISON WASTEWATER DETAILS]
LAST SAVED 9/26/2012 5:49 PM
This document, together with the concepts and designs presented herein, as an instrument of service, is intended only for the specific purpose and client for which it was prepared. Reuse of and improper reliance on this document without written authorization and adaptation by Kimley-Horn and Associates, Inc. shall be without liability to Kimley-Horn and Associates, Inc.

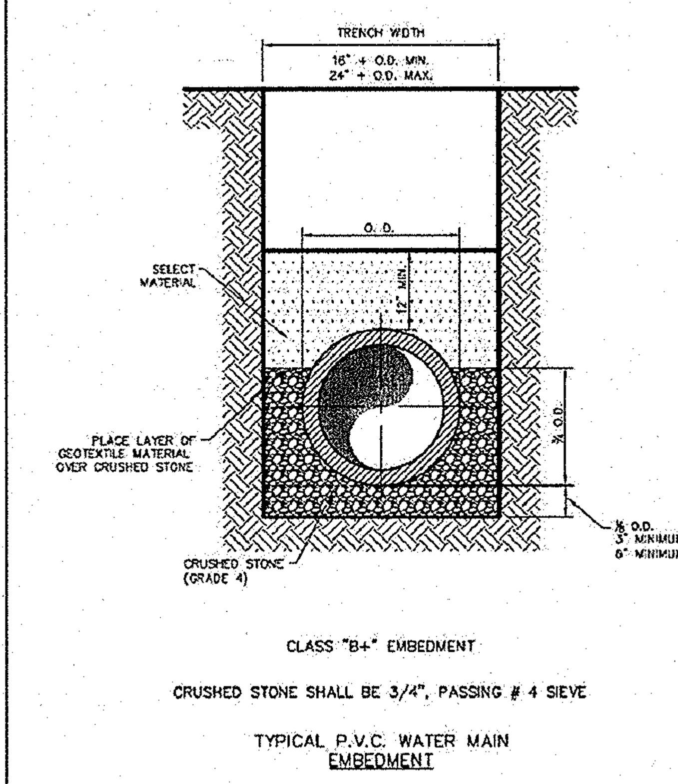

CLASS "B+" EMBEDMENT

CRUSHED STONE SHALL BE 3/4", PASSING # 4 SIEVE

TYPICAL P.V.C. WATER MAIN EMBEDMENT

Addison! PUBLIC WORKS DEPARTMENT | P.V.C. WATER MAIN EMBEDMENT | STANDARD CONSTRUCTION DETAILS WATER | DATE: AUGUST, 2010 | REV DATE: - | SHEET: SD-W01

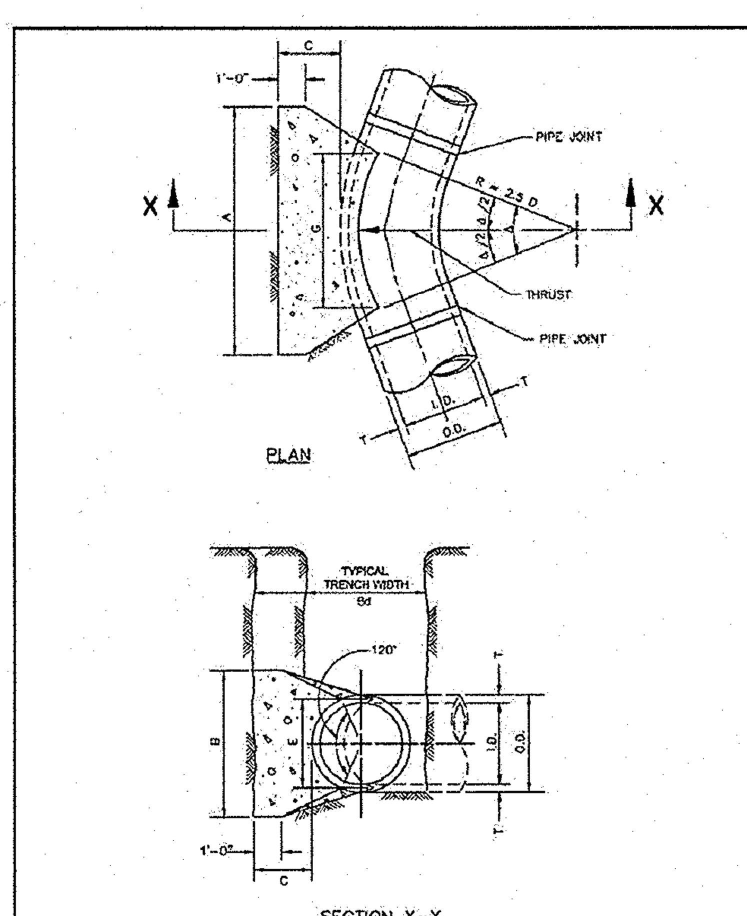

Addison! PUBLIC WORKS DEPARTMENT | HORIZONTAL THRUST BLOCK AT PIPE BEND | STANDARD CONSTRUCTION DETAILS WATER | DATE: AUGUST, 2010 | REV DATE: - | SHEET: SD-W04

I.D. (IN.)	T (IN.)	Δ = 11.25° (FT.)	Δ ≥ 22.50° (FT.)	E (FT.)
4,6,8	0.4	1.5	1.5	0.9
10,12	0.5	1.5	1.5	1.2
16,18	0.6	1.5	1.5	1.6
20	0.7	1.5	1.5	1.8
24	0.9	1.5	1.5	2.1
30	2.9	1.5	1.9	2.6
36	4.5	1.5	2.3	3.3
42	5.0	1.8	2.6	3.8
48	5.5	2.0	3.0	4.3
54	6.0	2.3	3.4	4.8
60	6.5	2.5	3.8	5.3
66	6.8	2.8	4.1	5.7
72	7.5	3.0	4.5	6.3
78	7.5	3.3	4.9	6.7
84	8.0	3.5	5.3	7.2
90	8.5	3.8	5.6	7.7
96	9.0	4.0	6.0	8.2

	Δ = 11.25°		EARTH			ROCK				Δ = 22.50°		EARTH			ROCK		
I.D. (IN.)	G (FT.)	THRUST (TONS)	A (FT.)	B (FT.)	VOL. (C.Y.)	A (FT.)	B (FT.)	VOL. (C.Y.)	I.D. (IN.)	G (FT.)	THRUST (TONS)	A (FT.)	B (FT.)	VOL. (C.Y.)	A (FT.)	B (FT.)	VOL. (C.Y.)
4,6,8	0.4	1.0	1.0	1.5	0.1	1.0	1.0	0.1	4,6,8	0.8	2.0	1.5	1.5	0.1	1.0	1.0	0.1
10,12	0.6	2.2	1.5	1.5	0.1	1.0	1.5	0.1	10,12	1.1	4.4	2.0	2.5	0.3	1.5	1.5	0.1
16,18	0.8	5.0	2.0	2.5	0.3	1.5	2.0	0.2	16,18	1.6	9.9	3.0	3.5	0.6	2.0	2.5	0.3
20	0.9	6.2	2.0	3.5	0.4	1.5	3.0	0.3	20	1.8	12.3	3.5	3.5	0.7	2.0	3.0	0.4
24	1.1	8.9	3.0	3.5	0.5	1.5	3.0	0.3	24	2.2	17.7	4.0	4.5	1.0	3.0	3.5	0.5
30	1.4	10.4	3.0	3.5	0.6	2.0	3.5	0.4	30	2.7	20.7	5.0	4.5	1.5	3.0	4.0	0.6
36	1.7	15.0	3.5	4.5	0.9	2.0	4.0	0.5	36	3.3	29.8	5.5	5.5	2.3	4.0	4.0	1.3
42	1.9	20.4	4.5	5.0	1.5	2.5	5.0	0.8	42	3.8	40.5	7.0	6.0	3.9	4.5	5.0	2.1
48	2.2	26.6	4.5	6.0	2.0	2.5	6.0	1.1	48	4.4	52.9	8.0	7.0	5.7	4.5	6.0	2.8
54	2.5	33.7	6.0	6.0	3.0	3.0	6.0	1.4	54	4.9	67.0	9.0	8.0	8.0	6.0	6.0	4.1
60	2.7	41.6	6.0	7.0	3.8	3.0	7.0	1.8	60	5.5	82.7	9.5	9.0	10.6	6.0	7.0	5.3
66	3.0	50.3	6.5	8.0	5.1	3.5	8.0	2.7	66	6.0	100.1	10.5	10.0	14.1	6.5	8.0	7.2
72	3.3	59.9	7.5	8.0	6.3	4.0	8.0	3.3	72	6.6	119.1	11.0	11.0	17.6	7.5	8.0	9.1
78	3.6	70.2	8.0	9.0	8.1	4.0	9.0	3.9	78	7.1	139.8	12.0	12.0	22.5	8.0	9.0	11.7
84	3.8	81.5	8.5	10.0	10.3	4.5	10.0	5.3	84	7.6	162.1	13.0	12.5	27.2	8.5	10.0	14.6
90	4.1	93.5	9.5	10.0	12.2	5.0	10.0	6.3	90	8.2	186.1	14.0	13.5	33.7	9.5	10.0	17.7
96	4.4	106.4	10.0	11.0	15.0	5.0	11.0	7.4	96	8.7	211.7	15.0	14.5	41.2	10.0	11.0	21.8

TABLES OF DIMENSIONS AND QUANTITIES

Addison! PUBLIC WORKS DEPARTMENT | HORIZONTAL THRUST BLOCK DIMENSIONS & QUANTITIES | STANDARD CONSTRUCTION DETAILS WATER | DATE: AUGUST, 2010 | REV DATE: - | SHEET: SD-W05

	Δ = 30°		EARTH			ROCK				Δ = 45°		EARTH			ROCK		
I.D. (IN.)	G (FT.)	THRUST (TONS)	A (FT.)	B (FT.)	VOL. (C.Y.)	A (FT.)	B (FT.)	VOL. (C.Y.)	I.D. (IN.)	G (FT.)	THRUST (TONS)	A (FT.)	B (FT.)	VOL. (C.Y.)	A (FT.)	B (FT.)	VOL. (C.Y.)
4,6,8	1.0	2.6	2.0	1.5	0.2	1.0	1.5	0.1	4,6,8	1.5	3.9	2.0	2.0	0.2	1.5	1.5	0.1
10,12	1.5	5.9	2.5	2.5	0.3	2.0	1.5	0.2	10,12	2.2	8.7	3.5	2.5	0.5	2.0	2.5	0.3
16,18	2.2	13.2	3.5	4.0	0.8	2.5	3.0	0.4	16,18	3.2	19.5	4.5	4.5	1.2	3.0	3.5	0.6
20	2.4	16.3	4.5	4.0	1.0	3.0	3.0	0.5	20	3.6	24.1	5.5	4.5	1.5	3.5	3.5	0.7
24	2.9	23.4	6.0	4.0	1.4	3.5	3.5	0.7	24	4.3	34.6	8.0	4.5	2.3	4.5	4.0	1.1
30	3.6	27.5	6.5	5.0	1.9	3.5	4.0	0.9	30	5.4	40.6	8.5	5.0	3.2	5.5	4.0	1.6
36	4.4	39.5	7.0	6.0	3.4	4.5	4.5	1.6	36	6.5	58.5	10.0	6.0	5.3	6.5	4.5	2.6
42	5.1	53.8	8.0	7.0	5.1	5.5	5.0	2.5	42	7.5	79.6	11.5	7.0	8.1	8.0	5.0	4.2
48	5.8	70.3	9.0	8.0	7.4	6.0	6.0	3.7	48	8.6	104.0	13.0	8.0	11.9	9.0	6.0	6.3
54	6.5	89.0	10.0	9.8	10.3	7.0	6.5	5.3	54	9.7	131.5	15.0	9.0	17.1	10.5	6.5	8.9
60	7.3	110.0	11.0	10.0	13.9	7.5	7.5	7.3	60	10.7	162.4	16.5	10.0	23.1	11.0	7.5	12.0
66	8.0	132.9	12.5	11.0	18.9	8.5	8.0	9.6	66	11.8	196.5	18.0	11.0	30.1	12.0	8.5	16.2
72	8.7	158.2	13.5	12.0	24.0	9.0	9.0	12.3	72	12.9	233.9	19.5	12.0	38.6	14.0	8.5	20.7
78	9.4	185.6	14.5	13.0	30.0	10.0	9.5	15.6	78	13.9	274.5	21.5	13.0	49.6	14.5	9.5	23.9
84	10.1	215.3	15.5	14.0	37.1	10.5	10.5	19.5	84	15.0	318.4	23.0	14.0	61.2	15.5	10.5	32.6
90	10.9	247.1	16.5	15.0	45.0	11.5	11.0	23.9	90	16.1	365.5	24.5	15.0	74.5	17.5	10.5	39.6
96	11.6	281.2	18.0	18.0	55.5	12.5	11.5	28.9	96	17.1	415.6	28.0	18.0	89.5	18.5	11.5	48.5

	Δ = 67.50°		EARTH			ROCK				Δ = 90°		EARTH			ROCK		
I.D. (IN.)	G (FT.)	THRUST (TONS)	A (FT.)	B (FT.)	VOL. (C.Y.)	A (FT.)	B (FT.)	VOL. (C.Y.)	I.D. (IN.)	G (FT.)	THRUST (TONS)	A (FT.)	B (FT.)	VOL. (C.Y.)	A (FT.)	B (FT.)	VOL. (C.Y.)
4,6,8	2.1	5.6	3.0	2.0	0.3	2.0	1.5	0.2	4,6,8	2.7	7.1	5.0	1.5	0.4	2.0	2.0	0.2
10,12	3.1	12.6	5.5	2.5	0.8	3.5	2.0	0.4	10,12	4.0	16.0	6.5	2.5	1.0	3.5	2.5	0.5
16,18	4.7	28.3	7.5	4.0	1.9	5.5	3.0	0.9	16,18	6.0	36.0	9.0	4.0	2.4	4.5	4.0	1.0
20	5.2	34.9	9.0	4.0	2.3	5.5	3.5	1.2	20	6.6	44.4	10.0	4.5	3.1	6.0	4.0	1.5
24	6.2	50.3	11.5	4.5	3.5	6.5	4.0	1.6	24	7.9	64.0	14.5	4.5	5.0	8.0	4.0	2.1
30	7.8	58.9	12.0	5.0	4.8	7.5	4.0	2.2	30	9.9	75.0	15.0	5.0	6.7	10.0	4.0	3.3
36	9.4	84.9	14.5	6.0	8.2	9.5	4.5	3.8	36	11.9	108.0	18.0	6.0	11.4	12.0	4.5	5.3
42	10.9	115.5	17.0	7.0	12.8	11.0	5.5	6.3	42	13.9	147.0	21.0	7.0	17.8	14.0	5.5	8.7
48	12.5	150.9	19.0	8.0	18.4	13.0	6.0	9.2	48	15.9	192.0	24.0	8.0	26.2	16.0	6.0	12.4
54	14.0	191.0	21.5	9.0	26.0	15.0	6.5	12.9	54	17.9	243.0	27.0	9.0	36.9	18.0	7.0	18.1
60	15.6	235.8	24.0	10.0	35.6	16.0	7.5	17.6	60	19.9	299.8	30.0	10.0	50.3	20.0	7.5	24.0
66	17.1	285.3	26.0	11.0	46.0	18.0	8.0	23.0	66	21.8	362.8	33.0	11.0	66.2	22.0	8.5	32.5
72	18.7	339.5	28.5	12.0	57.8	19.0	9.0	28.4	72	23.8	431.8	36.0	12.0	85.6	24.0	9.0	41.0
78	20.2	398.5	31.0	13.0	75.7	21.0	9.5	37.4	78	25.7	506.7	39.0	13.0	108.2	26.0	10.0	53.2
84	21.8	462.1	33.5	14.0	94.7	22.0	10.5	48.6	84	27.7	587.7	42.0	14.0	134.4	28.0	10.5	64.8
90	23.3	530.5	35.5	15.0	114.4	24.5	11.0	58.2	90	29.0	674.6	45.0	15.0	184.9	30.0	11.5	81.2
96	24.9	603.6	38.0	16.0	138.9	25.5	12.0	70.0	96	31.6	767.5	48.0	16.0	199.0	32.0	12.0	95.1

TABLES OF DIMENSIONS AND QUANTITIES

Addison! PUBLIC WORKS DEPARTMENT | HORIZONTAL THRUST BLOCK DIMENSIONS & QUANTITIES | STANDARD CONSTRUCTION DETAILS WATER | DATE: AUGUST, 2010 | REV DATE: - | SHEET: SD-W06

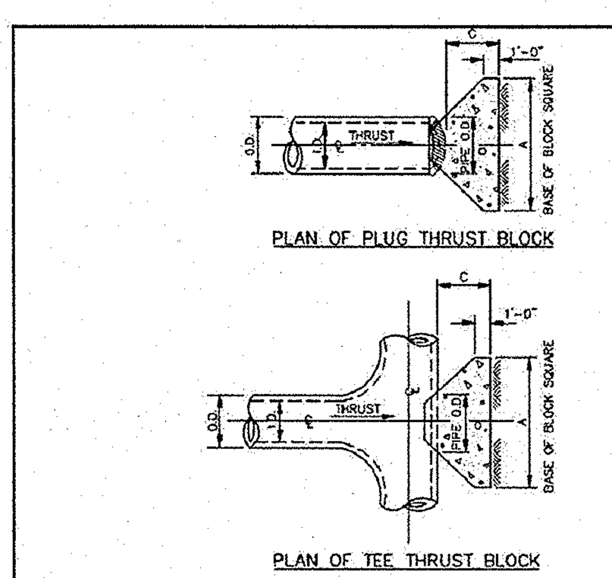

			EARTH		ROCK	
I.D. (IN.)	THRUST (TONS)	C (FT.)	A (FT.)	VOL. (C.Y.)	A (FT.)	VOL. (C.Y.)
4,6,8	5.1	1.5	2.5	0.3	2.0	0.2
10,12	11.3	1.5	3.5	0.6	2.5	0.3
16,18	23.5	2.0	5.5	1.6	4.0	0.9
20	31.5	2.0	6.0	1.9	4.0	0.9
24	45.2	2.5	7.0	3.1	5.0	1.7
30	53.0	3.0	7.5	4.1	5.5	2.4
36	76.3	4.0	9.0	7.3	6.5	4.2
42	104.0	4.5	10.5	11.0	7.5	6.2
48	136.0	5.0	12.0	15.6	8.5	8.7

			EARTH		ROCK	
I.D. (IN.)	THRUST (TONS)	C (FT.)	A (FT.)	VOL. (C.Y.)	A (FT.)	VOL. (C.Y.)
54	172.0	5.5	13.5	21.4	9.5	11.9
60	212.0	6.0	15.0	28.4	10.5	15.7
66	257.0	6.5	16.5	36.8	11.5	20.5
72	305.0	7.5	17.5	47.2	12.5	27.2
78	358.0	8.0	19.0	58.9	13.5	33.7
84	416.0	8.5	20.5	72.3	14.5	41.2
90	477.0	9.0	22.0	87.7	15.5	49.7
96	543.0	9.5	23.5	104.8	16.5	61.0

TABLES OF DIMENSIONS AND QUANTITIES

Addison! PUBLIC WORKS DEPARTMENT | HORIZONTAL THRUST BLOCK AT TEES & PLUGS | STANDARD CONSTRUCTION DETAILS WATER | DATE: AUGUST, 2010 | REV DATE: - | SHEET: SD-W07

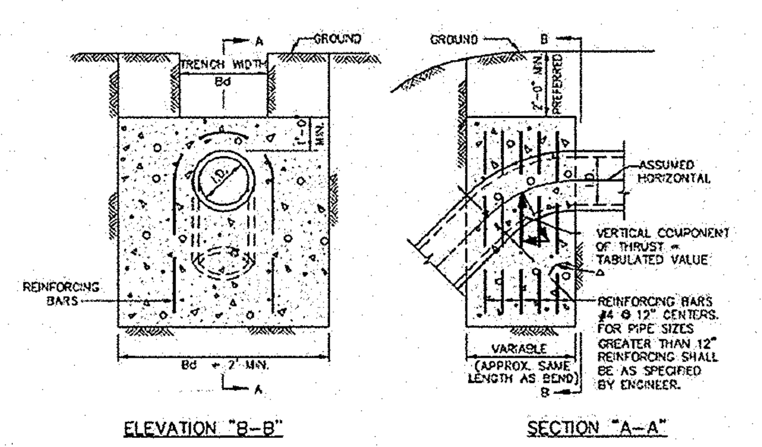

Δ	11.25°		22.50°		30°		45°		67.50°		90°		Δ
I.D. (IN.)	THRUST (TONS)	VOL. (C.Y.)	THRUST (TONS)	VOL. (C.Y.)	THRUST (TONS)	VOL. (C.Y.)	THRUST (TONS)	VOL. (C.Y.)	THRUST (TONS)	VOL. (C.Y.)	THRUST (TONS)	VOL. (C.Y.)	I.D. (IN.)
4,6,8	1.0	0.5	2.0	1.0	2.5	1.3	3.6	1.8	4.6	2.3	5.0	2.5	4,6,8
10,12	2.2	1.1	4.3	2.2	5.7	2.8	8.0	4.0	10.5	5.2	11.3	5.7	10,12
16,18	5.0	2.5	9.7	4.9	12.7	6.4	18.0	9.0	23.5	11.8	25.5	12.7	16,18
20	6.1	3.1	12.0	6.0	15.7	7.9	22.2	11.1	29.2	14.5	31.4	15.7	20
24	8.2	4.4	17.3	8.7	22.6	11.3	32.0	16.0	41.8	20.9	45.2	22.6	24
30	10.5	5.2	20.3	10.1	26.5	13.3	37.5	18.8	49.0	24.5	53.1	26.5	30
36	14.9	7.5	29.2	14.6	38.2	19.1	54.0	27.0	70.5	35.3	76.4	38.2	36
42	20.3	10.1	39.8	19.9	52.0	26.0	73.5	36.7	96.0	48.0	104.0	52.0	42
48	26.5	13.2	51.9	26.0	67.9	33.9	96.0	48.0	126.0	62.7	136.0	67.9	48
54	33.5	16.8	65.7	32.9	85.9	42.9	122.0	60.7	159.0	79.4	172.0	85.9	54
60	41.4	20.7	81.2	40.6	106.0	53.0	150.0	75.0	196.0	98.0	212.0	106.0	60
66	50.1	25.0	98.2	49.1	128.0	64.2	182.0	90.7	237.0	119.0	257.0	128.0	66
72	59.6	29.8	117.0	58.4	153.0	76.3	216.0	108.0	282.0	141.0	305.0	153.0	72
78	69.9	35.0	137.0	68.6	179.0	90.0	254.0	127.0	331.0	166.0	358.0	179.0	78
84	81.1	40.5	159.0	79.5	208.0	104.0	294.0	147.0	384.0	192.0	416.0	208.0	84
90	93.1	46.5	183.0	91.3	239.0	119.0	337.0	169.0	441.0	221.0	477.0	239.0	90
96	106.0	53.0	208.0	104.0	272.0	136.0	384.0	192.0	502.0	251.0	543.0	272.0	96

VERTICAL THRUST BLOCK

Addison! PUBLIC WORKS DEPARTMENT | VERTICAL THRUST BLOCK AT PIPE BEND | STANDARD CONSTRUCTION DETAILS WATER | DATE: AUGUST, 2010 | REV DATE: - | SHEET: SD-W08

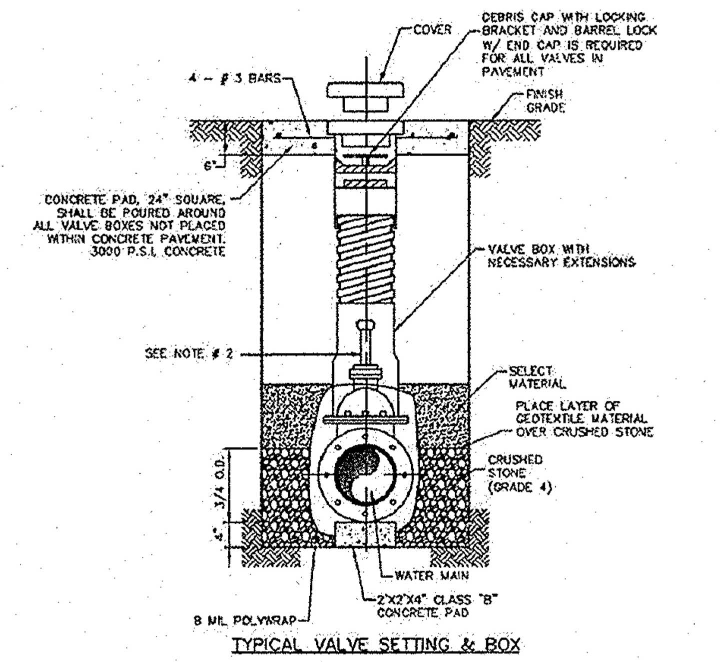

TYPICAL VALVE SETTING & BOX

NOTE:
1. 4"–12" R.S. GATE VALVES SHALL BE IN ACCORDANCE WITH TOWN OF ADDISON WATER SYSTEM REQUIREMENTS.
2. A PERMANENTLY ATTACHED VALVE EXTENSION STEM SHALL BE REQUIRED FOR ANY VALVE WHERE THE OPERATING NUT IS LOCATED IN EXCESS OF 5 FEET BELOW THE TOP OF VALVE BOX. THIS EXTENSION SHALL BE OF SUFFICIENT LENGTH TO INSURE THAT ITS TOP IS WITHIN 5 FEET OF VALVE BOX LID.
3. BLUE "V" (3") CUT INTO FACE OF NEAREST CURB AND POINTING TOWARD THE VALVE.
4. ALL IRON MATERIALS SHALL BE DOMESTIC. (MADE IN USA)
5. CRUSHED STONE SHALL BE 3/4", PASSING #4 SIEVE.

Addison! PUBLIC WORKS DEPARTMENT | VALVE SETTING BOX | STANDARD CONSTRUCTION DETAILS WATER | DATE: AUGUST, 2010 | REV DATE: - | SHEET: SD-W09

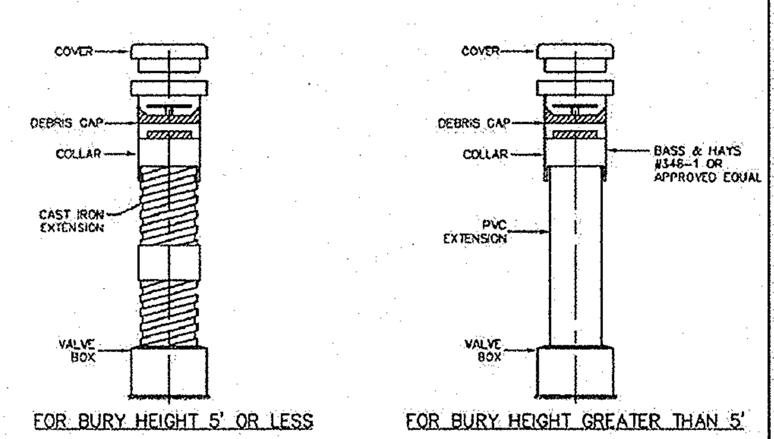

NOTE
1. ALL CAST IRON FITTINGS SHALL BE DOMESTIC. (MADE IN U.S.A.)
2. VALVE BOXES SHALL BE PROVED FOR BURIED VALVES. THESE BOXES SHALL BE THREE (3) PIECE SCREW TYPE CAST IRON OF THE EXTENSION TYPE AND SHALL BE: BASS & HAYS THREE (3) PIECE ADJUSTABLE SCREW TYPE, EAST JORDAN IRON WORKS 8560 W/ 6800 LID, MUELLER NO. H-10360 OR APPROVED EQUAL. THE THREE (3) PIECES SHALL CONSIST OF THE TOP SECTION, BOTTOM SECTION AND COVER.

Addison! PUBLIC WORKS DEPARTMENT | VALVE BOX WITH EXTENSION | STANDARD CONSTRUCTION DETAILS WATER | DATE: AUGUST, 2010 | REV DATE: - | SHEET: SD-W10

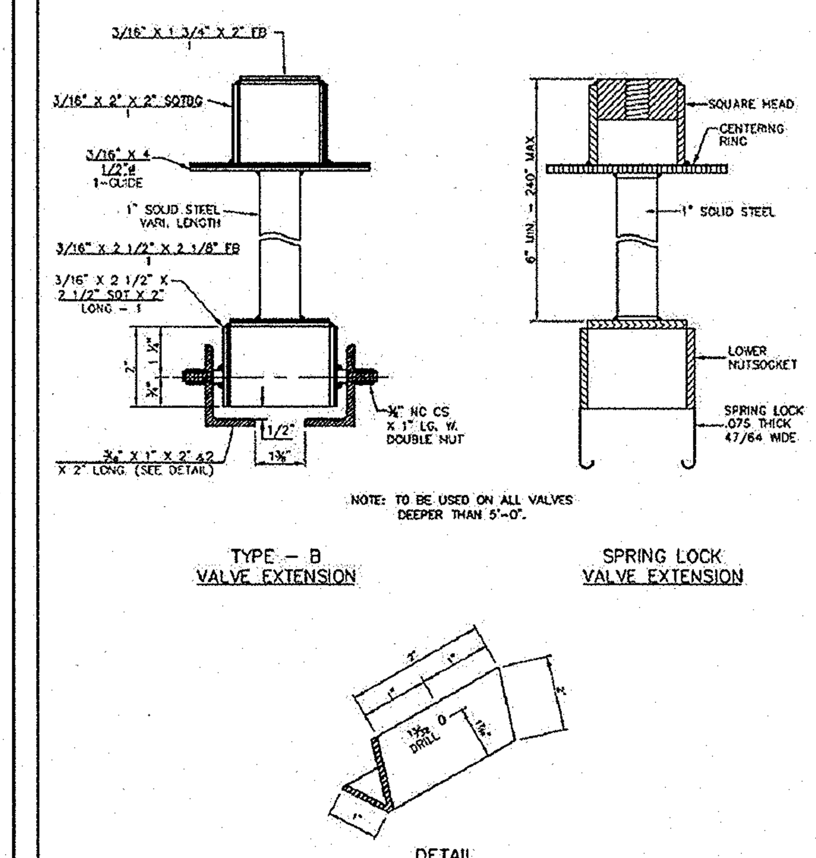

Addison! PUBLIC WORKS DEPARTMENT | VALVE EXTENSION | STANDARD CONSTRUCTION DETAILS WATER | DATE: AUGUST, 2010 | REV DATE: - | SHEET: SD-W11

NOTE:
1. DESIGN, SITE REQUIREMENTS, THE GENERAL OPERATION, PAINTING AND DELIVERY OF ALL FIRE HYDRANTS SHALL BE IN ACCORDANCE WITH THE TOWN OF ADDISON WATER SYSTEM REQUIREMENTS.
2. FIRE HYDRANTS SHALL BE LOCATED A MINIMUM OF 18" OUTSIDE OF THE AREA BETWEEN THE P.C.'S OF THE CORNER TURNING RADIUS AT INTERSECTIONS AND DRIVEWAYS (SEE PLAN VIEW).

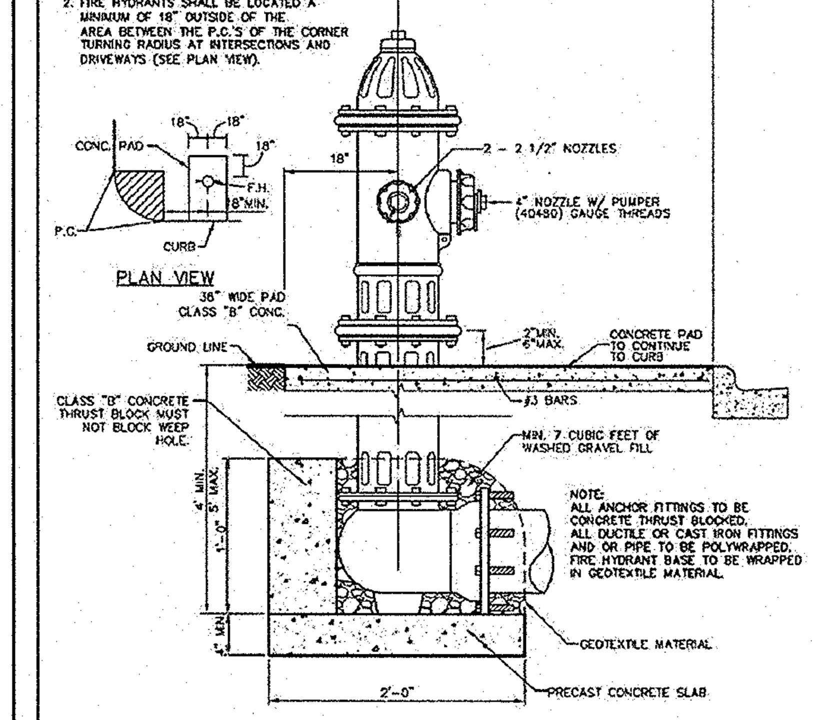

TYPICAL FIRE HYDRANT INSTALLATION

Addison! PUBLIC WORKS DEPARTMENT | TYPICAL FIRE HYDRANT INSTALLATION | STANDARD CONSTRUCTION DETAILS WATER | DATE: AUGUST, 2010 | REV DATE: - | SHEET: SD-W16

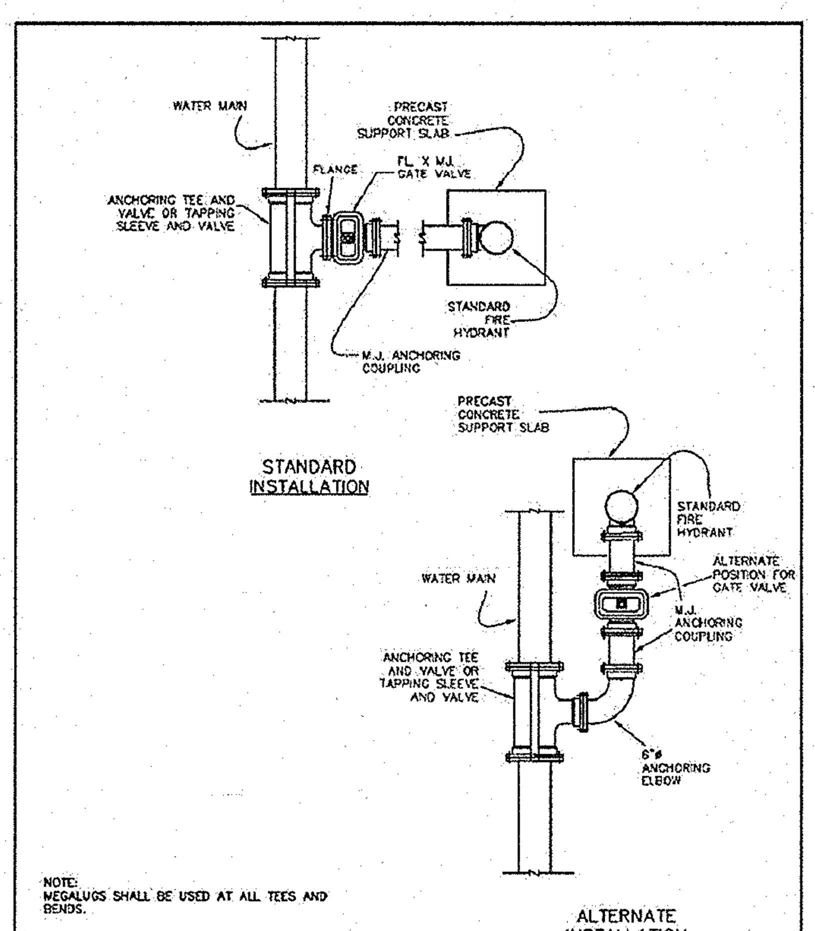

NOTE:
MEGALUGS SHALL BE USED AT ALL TEES AND BENDS.

Addison! PUBLIC WORKS DEPARTMENT | TYPICAL FIRE HYDRANT INSTALLATION | STANDARD CONSTRUCTION DETAILS WATER | DATE: AUGUST, 2010 | REV DATE: - | SHEET: SD-W17

NOTE
6"ø STEEL PIPE W/CONCRETE FILL 6' LENGTH (3' ABOVE PAVING, 3' BELOW PAVING) WITH 1–#4X5'–6" TO BE CASED IN 18"ø PIER TO DEPTH OF 1'–0" BELOW BOTTOM OF PIPE. USE 2–#6x12" REBAR THRU PIPE INTO CONCRETE PIER. PIPES TO BE PAINTED TRAFFIC YELLOW W/ 6" WHITE RELECTOR TAPE.

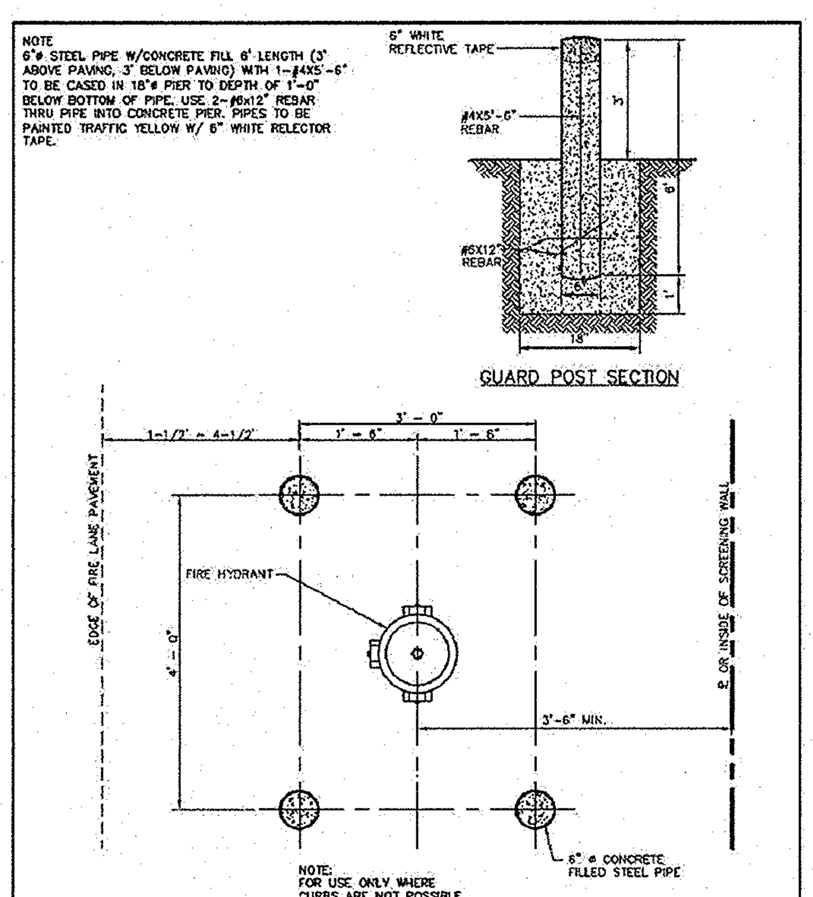

FIRE HYDRANT GUARD POST DETAIL

Addison! PUBLIC WORKS DEPARTMENT | FIRE HYDRANT GUARD POST | STANDARD CONSTRUCTION DETAILS WATER | DATE: AUGUST, 2010 | REV DATE: - | SHEET: SD-W18

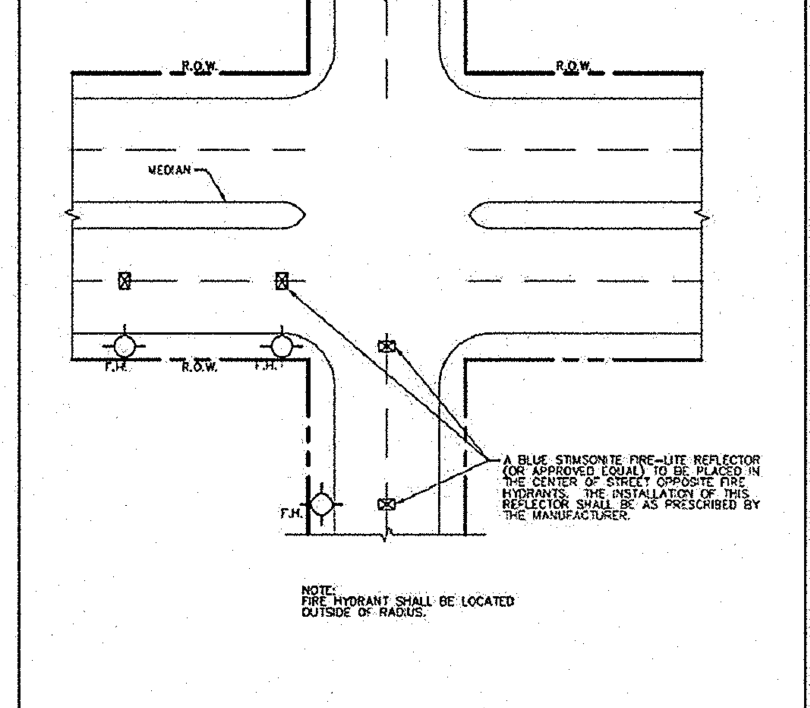

TYPICAL FIRE HYDRANT REFLECTOR INSTALLATION

Addison! PUBLIC WORKS DEPARTMENT | FIRE HYDRANT REFLECTOR INSTALLATION | STANDARD CONSTRUCTION DETAILS WATER | DATE: AUGUST, 2010 | REV DATE: - | SHEET: SD-W19

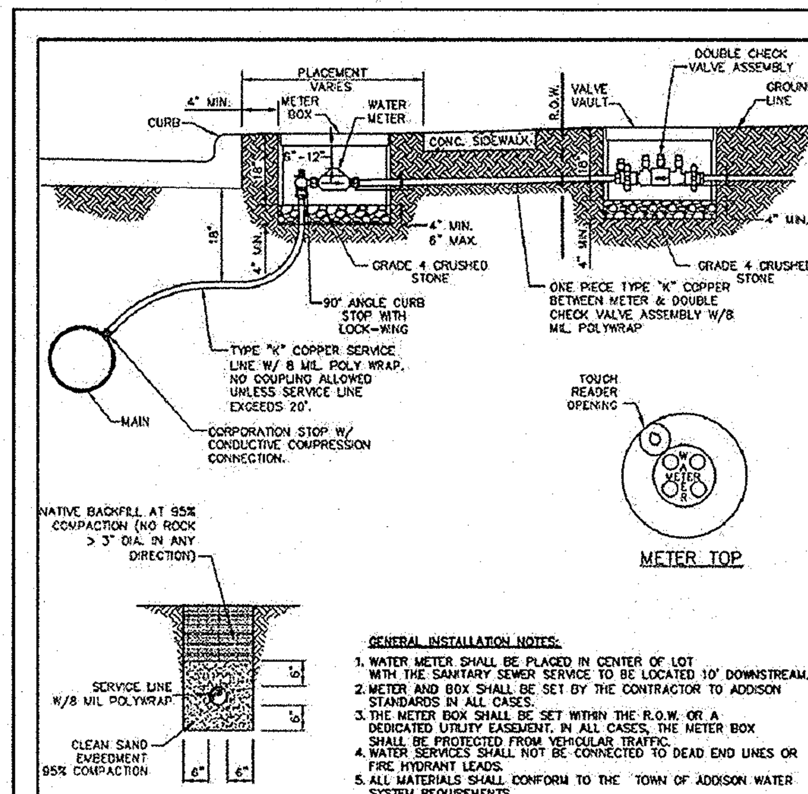

GENERAL INSTALLATION NOTES:
1. WATER METER SHALL BE PLACED IN CENTER OF LOT WITH THE SANITARY SEWER SERVICE TO BE LOCATED 10' DOWNSTREAM.
2. METER AND BOX SHALL BE SET BY THE CONTRACTOR TO ADDISON STANDARDS IN ALL CASES.
3. THE METER BOX SHALL BE SET WITHIN THE R.O.W. OR A DEDICATED UTILITY EASEMENT. IN ALL CASES, THE METER BOX SHALL BE PROTECTED FROM VEHICULAR TRAFFIC.
4. WATER SERVICES SHALL NOT BE CONNECTED TO DEAD END LINES OR FIRE HYDRANT LEADS.
5. ALL MATERIALS SHALL CONFORM TO THE TOWN OF ADDISON WATER SYSTEM REQUIREMENTS.

Type "K" Copper Service Pipe	Double Strap Bronze Service Saddle with C.C. Threads	East Jordan Iron Works Galvanized Meter Box With Iron Ring & Cover				
		Min. Dia.	Covers & Rigns	Min. Ht.	Min. Con Weight	Min. Total Weight
3/4 Inch	3/4 Inch	18 Inches	12⅝ Inches	18 Inches	13 lbs.	42 lbs.
1 Inch	1 Inch	24 Inches	20⅜ Inches	18 Inches	17 lbs.	98 lbs.
1 1/2 Inch	1 1/2 Inch	28 Inches	20⅜ Inches	18 Inches	20 lbs.	127 lbs.
2 Inch	2 Inch	28 Inches	20⅜ Inches	18 Inches	20 lbs.	127 lbs.

Addison! PUBLIC WORKS DEPARTMENT | SERVICE CONNECTION WITH METER BOX | STANDARD CONSTRUCTION DETAILS WATER | DATE: AUGUST, 2010 | REV DATE: - | SHEET: SD-W20

RECORD DRAWINGS (October 2013)
Information Provided By:
BOB MOORE CONSTRUCTION

No.	REVISIONS	DATE	BY

Kimley-Horn and Associates, Inc.
State of Texas Registration No. F-928
5750 GENESIS COURT, SUITE 200, FRISCO, TX 75034
PHONE: 972-335-3580 FAX: 972-335-3779
WWW.KIMLEY-HORN.COM

STATE OF TEXAS ROY BRASWELL 104908 LICENSED PROFESSIONAL ENGINEER 9/21/12

KHA PROJECT 063319038
DATE 9/27/2012
SCALE AS SHOWN
DESIGNED BY TBB
DRAWN BY AAE
CHECKED BY TBB

VILLAGE ON THE PARKWAY
ADDISON, TEXAS

TOWN OF ADDISON WATER DETAILS

SHEET NUMBER
C-20

This document, together with the concepts and designs presented herein, as an instrument of service, is intended only for the specific purpose and client for which it was prepared. Reuse of and improper reliance on this document without written authorization and adaptation by Kimley-Horn and Associates, Inc. shall be without liability to Kimley-Horn and Associates, Inc.
PLOTTED BY MAURICIO, MARLA 9/27/2012 9:00 AM
DWG NAME K:\FRI_CIVIL\63319038-VOP\DWG\PLAN SET\C-20-TOA-WATER-DETS.DWG [C-20 TOWN OF ADDISON WATER DETAILS]
LAST SAVED 8/28/2012 2:06 PM

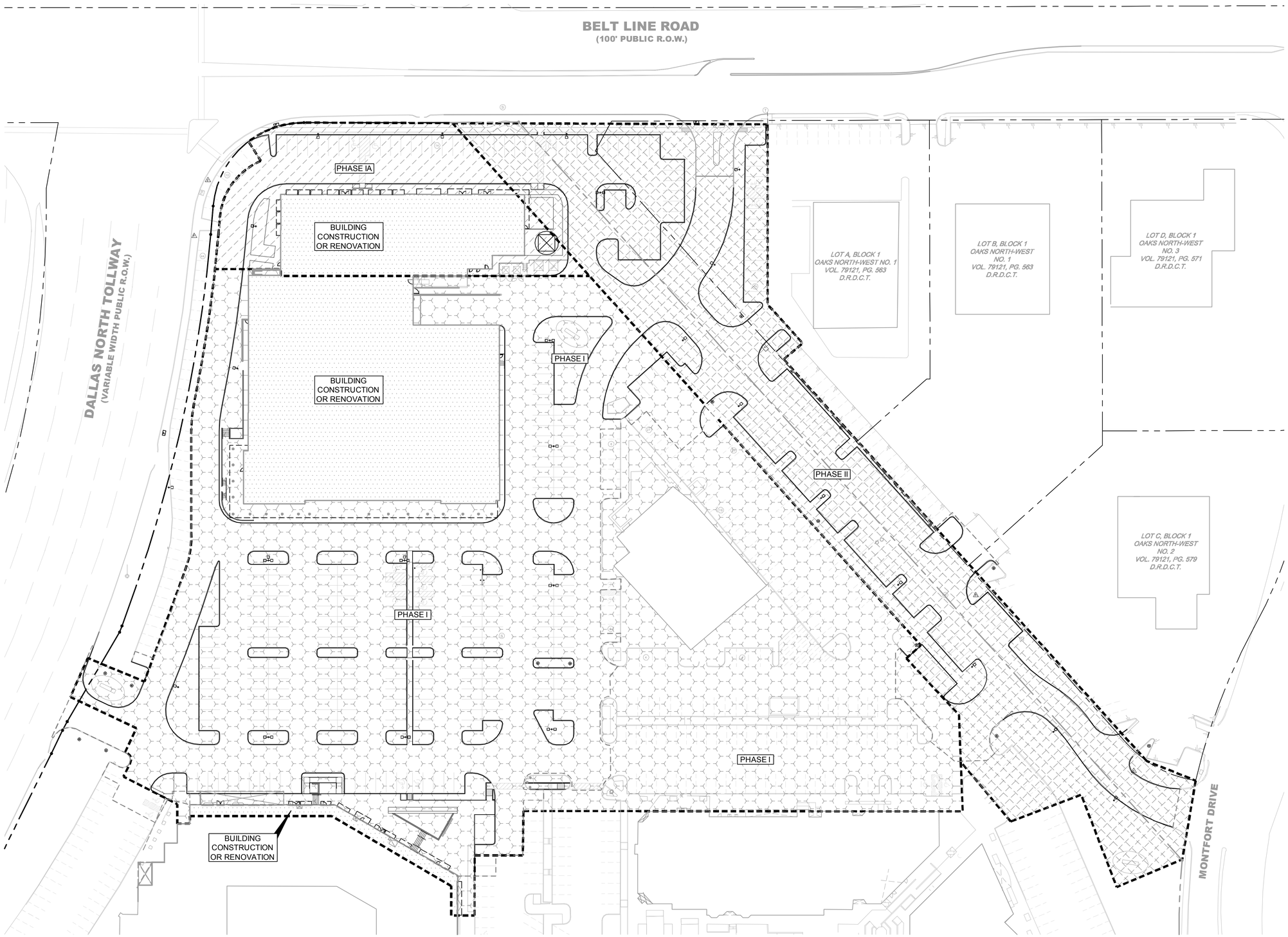

N
W E
S

0 40' 80'
GRAPHIC SCALE 40'

LEGEND

- PHASE I
- PHASE IA
- PHASE II
- BUILDING CONSTRUCTED OR RENOVATED

No.	REVISIONS	DATE	BY

Kimley-Horn and Associates, Inc.
State of Texas Registration No. F-928
5750 GENESIS COURT, SUITE 200, FRISCO, TX 75034
PHONE: 972-335-3580 FAX: 972-335-3779
WWW.KIMLEY-HORN.COM

PRELIMINARY
FOR REVIEW ONLY
Not for construction or permit purposes.
Kimley-Horn and Associates, Inc.
Engineer ROY BRASWELL
P.E. No. 104908 Date 9/17/2012

KHA PROJECT 063319038
DATE 9/17/2012
SCALE AS SHOWN
DESIGNED BY TBB
DRAWN BY AAE
CHECKED BY TBB

VILLAGE ON THE PARKWAY
ADDISON, TEXAS

PHASING PLAN

SHEET NUMBER
C-21

RECORD DRAWINGS (October 2013)
Information Provided By:
BOB MOORE CONSTRUCTION

PLOTTED BY BRASWELL, TIREY 9/17/2012 2:37 PM
DWG NAME K:\FRI_CIVIL\063319038\VOP\DWG\PLAN SET\C21-PHASE-PLAN.DWG [C-21 PHASING PLAN]
LAST SAVED 9/17/2012 2:24 AM

This document, together with the concepts and designs presented herein, as an instrument of service, is intended only for the specific purpose and client for which it was prepared. Reuse of and improper reliance on this document without written authorization and adaptation by Kimley-Horn and Associates, Inc. shall be without liability to Kimley-Horn and Associates, Inc.

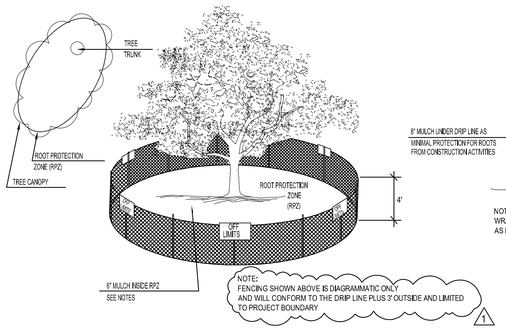

01 TREE PROTECTION FENCE A
NOT TO SCALE

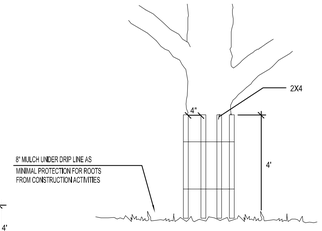

02 TREE PROTECTION FENCE B
NOT TO SCALE

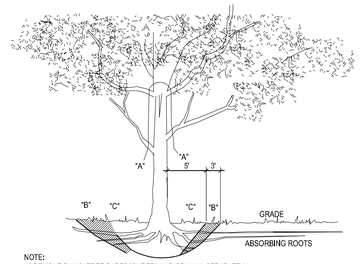

03 TREE REMOVAL DIAGRAM
NOT TO SCALE

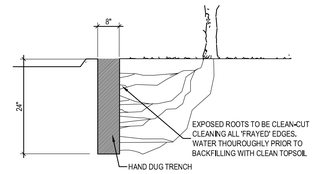

04 ROOT PRUNING DETAIL
N.T.S.

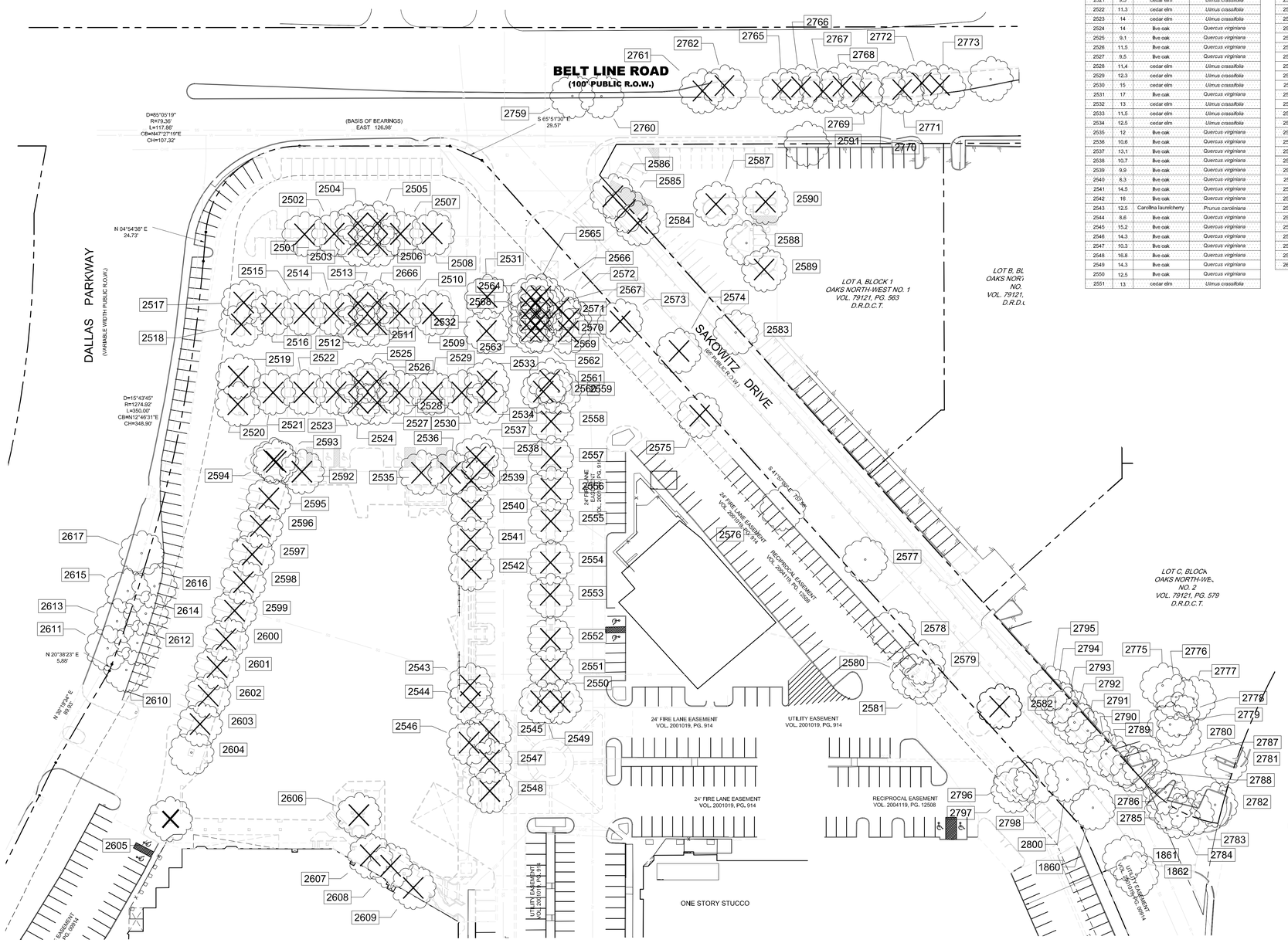

TAG#	DBH	COMMON NAME	SPECIES
2501	14.5	cedar elm	*Ulmus crassifolia*
2502	12.7	cedar elm	*Ulmus crassifolia*
2503	12.7	live oak	*Quercus virginiana*
2504	11.5	live oak	*Quercus virginiana*
2505	13.9	live oak	*Quercus virginiana*
2506	10.1	live oak	*Quercus virginiana*
2507	12.9	cedar elm	*Ulmus crassifolia*
2508	11.8	cedar elm	*Ulmus crassifolia*
2509	13.7	cedar elm	*Ulmus crassifolia*
2510	14	cedar elm	*Ulmus crassifolia*
2511	12.2	live oak	*Quercus virginiana*
2512	13	live oak	*Quercus virginiana*
2513	12.3	live oak	*Quercus virginiana*
2514	11.2	cedar elm	*Ulmus crassifolia*
2515	14.9	cedar elm	*Ulmus crassifolia*
2516	13.3	cedar elm	*Ulmus crassifolia*
2517	13.8	cedar elm	*Ulmus crassifolia*
2518	11.7	cedar elm	*Ulmus crassifolia*
2519	12.7	cedar elm	*Ulmus crassifolia*
2520	12.4	cedar elm	*Ulmus crassifolia*
2521	9.5	cedar elm	*Ulmus crassifolia*
2522	11.3	cedar elm	*Ulmus crassifolia*
2523	14	cedar elm	*Ulmus crassifolia*
2524	14	live oak	*Quercus virginiana*
2525	9.1	live oak	*Quercus virginiana*
2526	11.5	live oak	*Quercus virginiana*
2527	9.5	live oak	*Quercus virginiana*
2528	11.4	cedar elm	*Ulmus crassifolia*
2529	12.3	cedar elm	*Ulmus crassifolia*
2530	15	cedar elm	*Ulmus crassifolia*
2531	17	live oak	*Quercus virginiana*
2532	13	cedar elm	*Ulmus crassifolia*
2533	11.5	cedar elm	*Ulmus crassifolia*
2534	12.5	cedar elm	*Ulmus crassifolia*
2535	12	live oak	*Quercus virginiana*
2536	10.6	live oak	*Quercus virginiana*
2537	13.1	live oak	*Quercus virginiana*
2538	10.7	live oak	*Quercus virginiana*
2539	9.9	live oak	*Quercus virginiana*
2540	8.3	live oak	*Quercus virginiana*
2541	14.5	live oak	*Quercus virginiana*
2542	16	live oak	*Quercus virginiana*
2543	12.5	Carolina laurelcherry	*Prunus caroliniana*
2544	8.6	live oak	*Quercus virginiana*
2545	15.2	live oak	*Quercus virginiana*
2546	14.3	live oak	*Quercus virginiana*
2547	10.3	live oak	*Quercus virginiana*
2548	16.8	live oak	*Quercus virginiana*
2549	14.3	live oak	*Quercus virginiana*
2550	12.5	live oak	*Quercus virginiana*
2551	13	cedar elm	*Ulmus crassifolia*

TAG#	DBH	COMMON NAME	SPECIES
2552	11.5	cedar elm	*Ulmus crassifolia*
2553	12.5	cedar elm	*Ulmus crassifolia*
2554	11.6	cedar elm	*Ulmus crassifolia*
2555	11.9	cedar elm	*Ulmus crassifolia*
2556	13.6	cedar elm	*Ulmus crassifolia*
2557	13.5	cedar elm	*Ulmus crassifolia*
2558	12	cedar elm	*Ulmus crassifolia*
2559	16	live oak	*Quercus virginiana*
2560	17	live oak	*Quercus virginiana*
2561	12.5	live oak	*Quercus virginiana*
2562	4	redcedar	*Juniperus sp.*
2563	4	redcedar	*Juniperus sp.*
2564	4	redcedar	*Juniperus sp.*
2565	4	redcedar	*Juniperus sp.*
2566	3	redcedar	*Juniperus sp.*
2567	3	redcedar	*Juniperus sp.*
2568	5	redcedar	*Juniperus sp.*
2569	6	redcedar	*Juniperus sp.*
2570	3	redcedar	*Juniperus sp.*
2571	3	redcedar	*Juniperus sp.*
2572	3	redcedar	*Juniperus sp.*
2573	23	live oak	*Quercus virginiana*
2574	18	cedar elm	*Ulmus crassifolia*
2575	16.5	live oak	*Quercus virginiana*
2576	21.8	live oak	*Quercus virginiana*
2577	14.3	cedar elm	*Ulmus crassifolia*
2578	25.5	live oak	*Quercus virginiana*
2579	17.5	live oak	*Quercus virginiana*
2580	20	live oak	*Quercus virginiana*
2581	12.4	live oak	*Quercus virginiana*
2582	14.5	cedar elm	*Ulmus crassifolia*
2583	16.8	live oak	*Quercus virginiana*
2584	14.7	live oak	*Quercus virginiana*
2585	10	live oak	*Quercus virginiana*
2586	14.1	live oak	*Quercus virginiana*
2587	15	cedar elm	*Ulmus crassifolia*
2588	17.7	live oak	*Quercus virginiana*
2589	27.5	live oak	*Quercus virginiana*
2590	13.2	cedar elm	*Ulmus crassifolia*
2591	15	live oak	*Quercus virginiana*
2592	11.4	live oak	*Quercus virginiana*
2593	14	live oak	*Quercus virginiana*
2594	8.2	live oak	*Quercus virginiana*
2595	8.8	live oak	*Quercus virginiana*
2596	8.5	live oak	*Quercus virginiana*
2597	7.8	live oak	*Quercus virginiana*
2598	15.5	live oak	*Quercus virginiana*
2599	10.6	live oak	*Quercus virginiana*
2600	12	live oak	*Quercus virginiana*

TAG#	DBH	COMMON NAME	
2601	8.7	live oak	*Quercus virginiana*
2602	9.5	live oak	*Quercus virginiana*
2603	12.5	live oak	*Quercus virginiana*
2604	18.2	live oak	*Quercus virginiana*
2605	12.3	sweetgum	*Liquidambar styraciflua*
2606	12.5	live oak	*Quercus virginiana*
2607	13.2	live oak	*Quercus virginiana*
2608	10.2	sweetgum	*Liquidambar styraciflua*
2609	8	yaupon	*Ilex vomitoria*
2610	21	live oak	*Quercus virginiana*
2611	16.6	live oak	*Quercus virginiana*
2612	18.2	live oak	*Quercus virginiana*
2613	19.6	live oak	*Quercus virginiana*
2614	13.5	live oak	*Quercus virginiana*
2615	18	live oak	*Quercus virginiana*
2616	16.7	live oak	*Quercus virginiana*
2617	12.7	live oak	*Quercus virginiana*
2618	9.3	sweetgum	*Liquidambar styraciflua*
2619	11.5	sweetgum	*Liquidambar styraciflua*
2620	12.4	sweetgum	*Liquidambar styraciflua*
2621	9.2	live oak	*Quercus virginiana*
2622	7.7	cedar elm	*Ulmus crassifolia*
2623	8.6	cedar elm	*Ulmus crassifolia*
2624	6.2	cedar elm	*Ulmus crassifolia*
2625	7.8	cedar elm	*Ulmus crassifolia*
2626	7.2	cedar elm	*Ulmus crassifolia*
2627	6.3	cedar elm	*Ulmus crassifolia*
2628	9	cedar elm	*Ulmus crassifolia*
2629	9	cedar elm	*Ulmus crassifolia*
2630	13.3	live oak	*Quercus virginiana*
2631	6.9	live oak	*Quercus virginiana*
TAG#	**DBH**	**COMMON NAME**	
2632	9.3	sweetgum	*Liquidambar styraciflua*
2633	10	sweetgum	*Liquidambar styraciflua*
2634	8.6	sweetgum	*Liquidambar styraciflua*
2635	7.5	sweetgum	*Liquidambar styraciflua*
2636	8.5	sweetgum	*Liquidambar styraciflua*
2637	12	live oak	*Quercus virginiana*
2638	12.5	live oak	*Quercus virginiana*
2639	11.4	cedar elm	*Ulmus crassifolia*
2640	9	cedar elm	*Ulmus crassifolia*
2641	7.2	cedar elm	*Ulmus crassifolia*
2642	8.8	cedar elm	*Ulmus crassifolia*
2643	9.1	cedar elm	*Ulmus crassifolia*
2644	9.5	cedar elm	*Ulmus crassifolia*
2645	7.6	cedar elm	*Ulmus crassifolia*
2646	13.3	live oak	*Quercus virginiana*
2647	12.2	live oak	*Quercus virginiana*
2648	11.6	live oak	*Quercus virginiana*
2649	15.3	live oak	*Quercus virginiana*
2650	12.6	live oak	*Quercus virginiana*
2651	13.5	live oak	*Quercus virginiana*
2652	14.7	live oak	*Quercus virginiana*
2653	7.8	live oak	*Quercus virginiana*
2654	12.8	live oak	*Quercus virginiana*
2655	10	live oak	*Quercus virginiana*
2656	11.6	live oak	*Quercus virginiana*
2657	6.7	live oak	*Quercus virginiana*
2658	8	live oak	*Quercus virginiana*
2659	15.2	live oak	*Quercus virginiana*
2660	18.2	live oak	*Quercus virginiana*
2661	13	live oak	*Quercus virginiana*
2662	14.5	live oak	*Quercus virginiana*
2663	17.8	live oak	*Quercus virginiana*
2664	6.2	yaupon	*Ilex vomitoria*
2665	18	live oak	*Quercus virginiana*
2666	10	live oak	*Quercus virginiana*

EXISTING TREE NOTES

1. Existing trees to remain shall be protected during construction from tree structure damage and compaction of soil under and around dripline (canopy) of tree.
2. If any root structure is damaged during adjacent excavation/construction, notify the Architect immediately. It is recommended that a licensed Arborist be secured for the treatment of any possible tree wounds.
3. No disturbance of the soil greater than 4" shall be located closer to the tree trunk than 1/2 the distance of the drip line to the tree trunk. A minimum of 75% of the drip line and root zone shall be preserved at natural grade.
4. Any fine grading done within the critical root zones of the protected trees must be done with light machinery such as a bobcat or light tractor. No earth moving equipment with tracks is allowed within the critical root zone of the trees.
5. Material Storage: No materials intended for use in construction or waste materials accumulated due to excavation or demolition shall be placed within the limits of the dripline of any tree.
6. Equipment Cleaning/Liquid Disposal: No equipment may be cleaned, toxic solutions, or other liquid chemicals shall be deposited within the limits of the dripline of a tree. This would include but not be limited to paint, oil, solvents, asphalt, concrete, mortar, primers, etc.
7. Tree Attachments: No signs, wires or other attachments, other than those of a protective nature shall be attached to any tree.
8. Vehicular Traffic: No vehicular and construction equipment traffic or parking is allowed within the limits of the dripline of trees.
9. Boring of Utilities: May be permitted under protected trees in certain circumstances. The minimum length of the bore shall be the width of the tree's canopy and shall be a minimum depth of forty-eight (48") inches.
10. Trenching: Any irrigation trenching which must be done within the critical root zone of a tree shall be dug by hand and enter the area in a radial manner.
11. Tree Flagging: All trees to be removed from the site shall be flagged by the Contractor with bright red vinyl tape (3" width) wrapped around the main trunk at a height of four (4) feet above grade. Flagging shall be approved by Landscape Architect prior to any tree removal. Contractor shall contact Landscape Architect with 72 hour notice to schedule on-site meeting.
12. Protective Fencing: All trees to remain, as noted on drawings, shall have protective fencing located at the tree's dripline. The protective fencing to be chain link fence with a four (4) foot approximate height. The protective fencing will be located as indicated on the Tree Protection Detail(s). 1
13. Bark Protection: In situations where a tree remains in the immediate area of intended construction, the tree shall be protected by enclosing the entire circumference of the tree's trunk with lumber encircled with wire or other means that does not damage the tree. Refer to Tree Protection Detail(s).
14. Construction Pruning: In a case where a low hanging limb is broken during the course of construction, the Contractor shall notify the Landscape Architect immediately. In no instance shall the Contractor prune any portion of the damaged tree without the prior approval by the Landscape Architect.

EXISTING TREE PRUNING NOTES

1. Contractor shall provide a Class 'B' pruning on all existing trees.
2. This shall include at a minimum: removal of dead, dying, diseased weak branches,along main trunk structure and within branching area.
3. Contractor shall include deep root feeding and invigoration of existing trees. This shall be organic based nutrients based for root growth and leaf growth stimulation.
4. Contractor shall be required to chip all removed branches, leafs, etc.

EXISTING TREE LEGEND

EXISTING TREE TO REMAIN

EXISTING TREE TO BE REMOVED

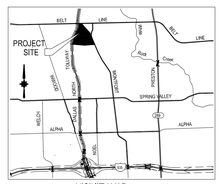

VICINITY MAP
(NOT TO SCALE)

RECORD DRAWINGS (October 2013)
Information Provided By:
BOB MOORE CONSTRUCTION

01 EXISTING TREE PLAN
SCALE: 1" = 40'-0"

0 20 40 80

CALL BEFORE YOU DIG! 1-800-245-4545 TEXAS ONE CALL SYSTEM

Good Fulton & Farrell Architects
2808 Fairmount Street
Suite 300
Dallas, Texas 75201
214.303.1500/Tel
214.303.1512/Fax
www.gff.com

© Good Fulton & Farrell 2009

smr
landscape architects, inc.
1708 N. Griffin Street
Dallas, Texas 75202
Tel 214.871.0383
Fax 214.871.0545
Email smr@smr4a.com

VILLAGE ON THE PARKWAY

5100 BELT LINE ROAD
Addison, Texas 75254

No.	Date	Item
1	09.21.12	CITY COMMENTS

REVISIONS

BDA Drawn
BDA Checked
BDA Approved

REGISTERED LANDSCAPE ARCHITECT BRIAN D. ADAMS STATE OF TEXAS
09.21.12

EXISTING TREE PLAN

Project No.	11013.03
Date	05.25.12
Last Revision	

L1.00

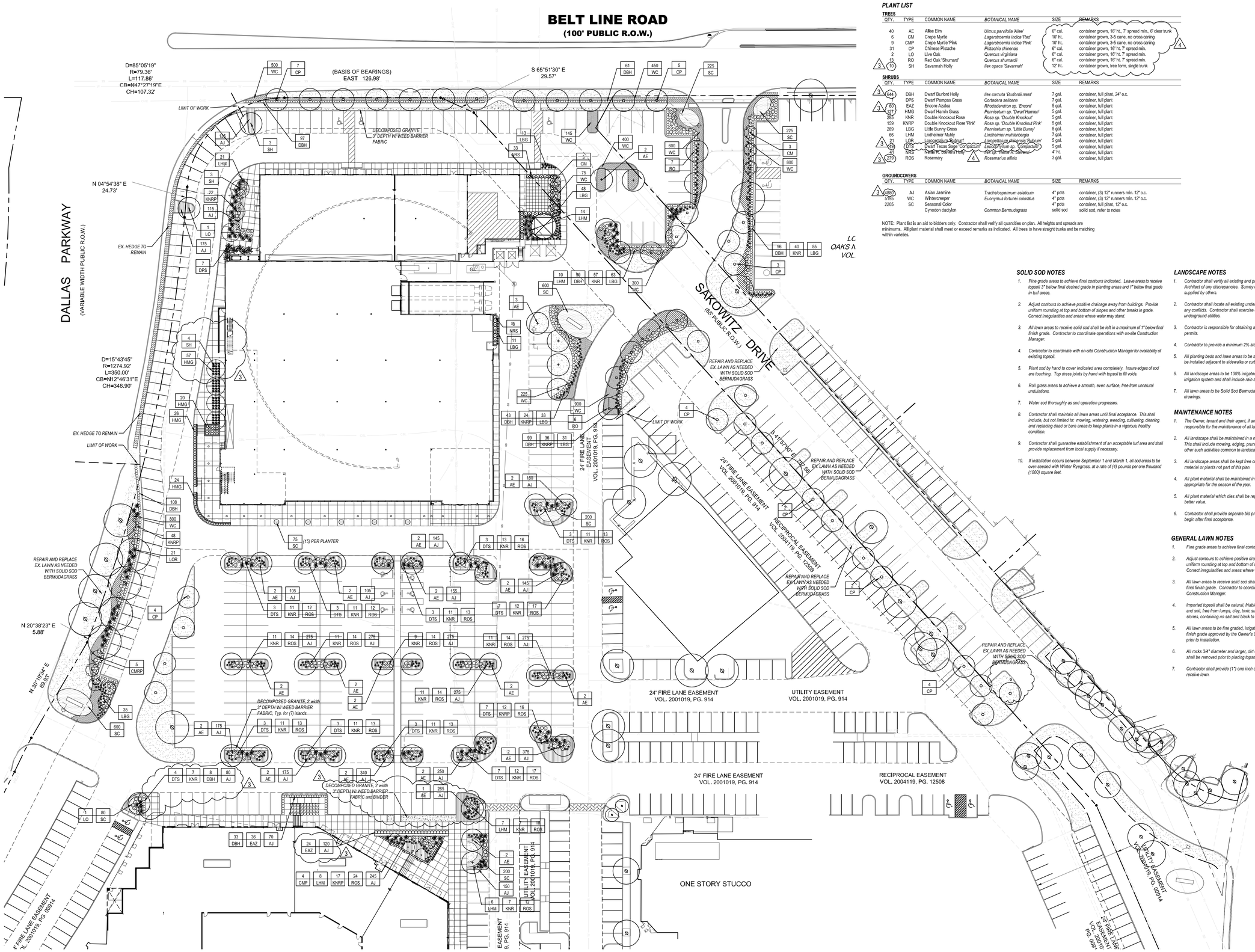

PLANT LIST

TREES

QTY.	TYPE	COMMON NAME	BOTANICAL NAME	SIZE	REMARKS
40	AE	Allee Elm	*Ulmus parvifolia 'Allee'*	6" cal.	container grown, 16' ht., 7' spread min., 6' clear trunk
6	CM	Crepe Myrtle	*Lagerstroemia indica 'Red'*	10' ht.	container grown, 3-5 cane, no cross caning
9	CMP	Crepe Myrtle 'Pink	*Lagerstroemia indica 'Pink'*	10' ht.	container grown, 3-5 cane, no cross caning
31	CP	Chinese Pistache	*Pistachia chinensis*	6" cal.	container grown, 16' ht., 7' spread min.
2	LO	Live Oak	*Quercus virginiana*	6" cal.	container grown, 16' ht., 7' spread min.
13	RO	Red Oak 'Shumard'	*Quercus shumardii*	6" cal.	container grown, 16' ht., 7' spread min.
3 (10)	SH	Savannah Holly	*Ilex opaca 'Savannah'*	12' ht.	container grown, tree form, single trunk

SHRUBS

QTY.	TYPE	COMMON NAME	BOTANICAL NAME	SIZE	REMARKS
3 (644)	DBH	Dwarf Burford Holly	*Ilex cornuta 'Burfordii nana'*	7 gal.	container, full plant, 24" o.c.
	DPS	Dwarf Pampas Grass	*Cortaderia selloana*	7 gal.	container, full plant
3 (60)	EAZ	Encore Azaleas	*Rhododendron sp. 'Encore'*	5 gal.	container, full plant
127	HMG	Dwarf Hamlin Grass	*Pennisetum sp. 'Dwarf Hamlen'*	5 gal.	container, full plant
285	KNR	Double Knockout Rose	*Rosa sp. 'Double Knockout'*	5 gal.	container, full plant
159	KNRP	Double Knockout Rose 'Pink'	*Rosa sp. 'Double Knockout Pink'*	5 gal.	container, full plant
289	LBG	Little Bunny Grass	*Pennisetum sp. 'Little Bunny'*	5 gal.	container, full plant
66	LHM	Lindheimer Muhly	*Lindheimer muhlenbergia*	7 gal.	container, full plant
21	LOR	Longspur Rubrum	*Loropetalum chinensis 'Rubrum'*	5 gal.	container, full plant
3 (49)	DTS	Dwarf Texas Sage 'Compactum'	*Leucophyllum sp. 'Compactum'*	5 gal.	container, full plant
41	NRS	Nellie R. Stevens Holly	*Ilex sp. 'Nellie R. Stevens'*	4' ht.	container, full plant
3 (279)	ROS	Rosemary	*Rosemarius affinis*	3 gal.	container, full plant

GROUNDCOVERS

QTY.	TYPE	COMMON NAME	BOTANICAL NAME	SIZE	REMARKS
3 (4880)	AJ	Asian Jasmine	*Trachelospermum asiaticum*	4" pots	container, (3) 12" runners min. 12" o.c.
3195	WC	Wintercreeper	*Euonymus fortunei coloratus*	4" pots	container, (3) 12" runners min. 12" o.c.
2205	SC	Seasonal Color		4" pots	container, full plant, 12" o.c.
		Cynodon dactylon	*Common Bermudagrass*	solid sod	solid sod, refer to notes

NOTE: Plant list is an aid to bidders only. Contractor shall verify all quantities on plan. All heights and spreads are minimums. All plant material shall meet or exceed remarks as indicated. All trees to have straight trunks and be matching within varieties.

SOLID SOD NOTES

1. Fine grade areas to achieve final contours indicated. Leave areas to receive topsoil 3" below final desired grade in planting areas and 1" below final grade in turf areas.
2. Adjust contours to achieve positive drainage away from buildings. Provide uniform rounding at top and bottom of slopes and other breaks in grade. Correct irregularities and areas where water may stand.
3. All lawn areas to receive solid sod shall be left in a maximum of 1" below final finish grade. Contractor to coordinate operations with on-site Construction Manager.
4. Contractor to coordinate with on-site Construction Manager for availability of existing topsoil.
5. Plant sod by hand to cover indicated area completely. Insure edges of sod are touching. Top dress joints by hand with topsoil to fill voids.
6. Roll grass areas to achieve a smooth, even surface, free from unnatural undulations.
7. Water sod thoroughly as sod operation progresses.
8. Contractor shall maintain all lawn areas until final acceptance. This shall include, but not limited to: mowing, watering, weeding, cultivating, cleaning and replacing dead or bare areas to keep plants in a vigorous, healthy condition.
9. Contractor shall guarantee establishment of an acceptable turf area and shall provide replacement from local supply if necessary.
10. If installation occurs between September 1 and March 1, all sod areas to be over-seeded with Winter Ryegrass, at a rate of (4) pounds per one thousand (1000) square feet.

LANDSCAPE NOTES

1. Contractor shall verify all existing and proposed site elements and notify Architect of any discrepancies. Survey data of existing conditions was supplied by others.
2. Contractor shall locate all existing underground utilities and notify Architect of any conflicts. Contractor shall exercise caution when working in the vicinity of underground utilities.
3. Contractor is responsible for obtaining all required landscape and irrigation permits.
4. Contractor to provide a minimum 2% slope away from all structures.
5. All planting beds and lawn areas to be separated by steel edging. No steel to be installed adjacent to sidewalks or curbs.
6. All landscape areas to be 100% irrigated with an underground automatic irrigation system and shall include rain and freeze sensors.
7. All lawn areas to be Solid Sod Bermudagrass, unless otherwise noted on the drawings.

MAINTENANCE NOTES

1. The Owner, tenant and their agent, if any, shall be jointly and severally responsible for the maintenance of all landscape.
2. All landscape shall be maintained in a neat and orderly manner at all times. This shall include mowing, edging, pruning, fertilizing, watering, weeding and other such activities common to landscape maintenance.
3. All landscape areas shall be kept free of trash, litter, weeds and other such material or plants not part of this plan.
4. All plant material shall be maintained in a healthy and growing condition as is appropriate for the season of the year.
5. All plant material which dies shall be replaced with plant material of equal or better value.
6. Contractor shall provide separate bid proposal for one year's maintenance to begin after final acceptance.

GENERAL LAWN NOTES

1. Fine grade areas to achieve final contours indicated on civil plans.
2. Adjust contours to achieve positive drainage away from buildings. Provide uniform rounding at top and bottom of slopes and other breaks in grade. Correct irregularities and areas where water may stand.
3. All lawn areas to receive solid sod shall be left in a maximum of 1" below final finish grade. Contractor to coordinate operations with on-site Construction Manager.
4. Imported topsoil shall be natural, friable soil from the region, known as bottom and soil, free from lumps, clay, toxic substances, roots, debris, vegetation, stones, containing no salt and black to brown in color.
5. All lawn areas to be fine graded, irrigation trenches completely settled, and finish grade approved by the Owner's Construction Manager or Architect prior to installation.
6. All rocks 3/4" diameter and larger, dirt clods, sticks, concrete spoils, etc. shall be removed prior to placing topsoil and any lawn installation
7. Contractor shall provide (1") one inch of imported topsoil on all areas to receive lawn.

RECORD DRAWINGS (October 2013)
Information Provided By:
BOB MOORE CONSTRUCTION

01 LANDSCAPE PLAN
SCALE: 1" = 30'-0"
0 15 30 60

Good Fulton & Farrell Architects
2808 Fairmount Street
Suite 300
Dallas, Texas 75201
214.303.1500/Tel
214.303.1512/Fax
www.gff.com

© Good Fulton & Farrell 2009

smr
landscape architects, inc.
1708 N. Griffin Street
Dallas, Texas 75202
Tel 214.871.0083
Fax 214.871.0545
Email smr@smr-la.com

VILLAGE ON THE PARKWAY
5100 BELT LINE ROAD
Addison, Texas 75254

No.	Date	Item
4	09.21.12	CITY COMMENTS
3	08.17.12	ASI #1

REVISIONS

BDA Drawn
BDA Checked
BDA Approved

LICENSED LANDSCAPE ARCHITECT BRADLEY D. ANDERSON 2076 STATE OF TEXAS
9.21.12

LANDSCAPE PLAN

Project No.	11013.03
Date	05.25.12
Last Revision	

L1.01

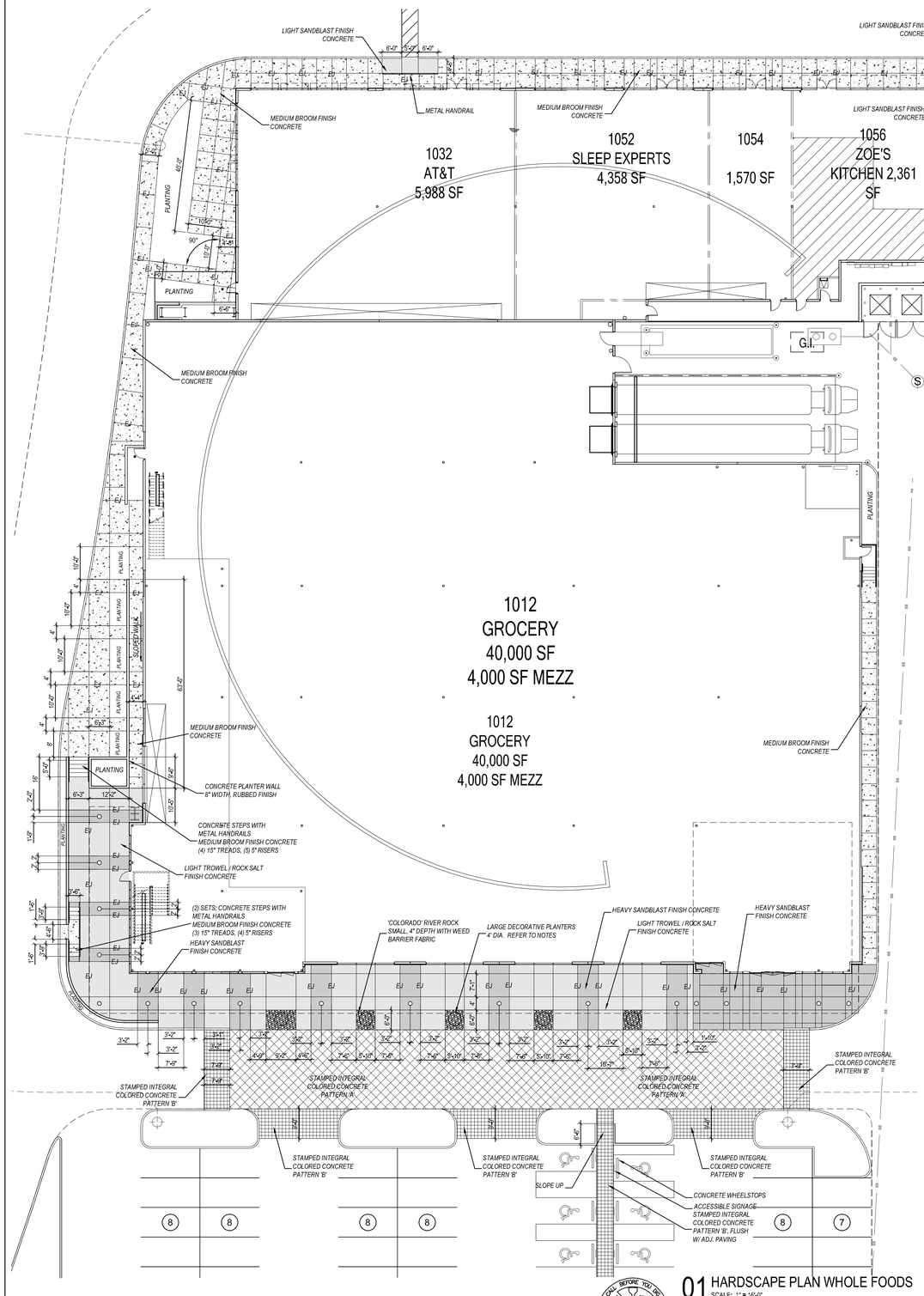

01 HARDSCAPE PLAN WHOLE FOOTS
SCALE: 1" = 16'-0"

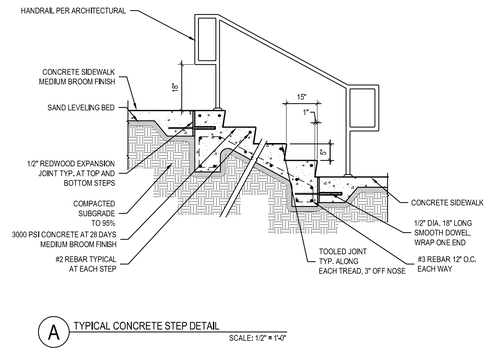

A TYPICAL CONCRETE STEP DETAIL
SCALE: 1/2" = 1'-0"

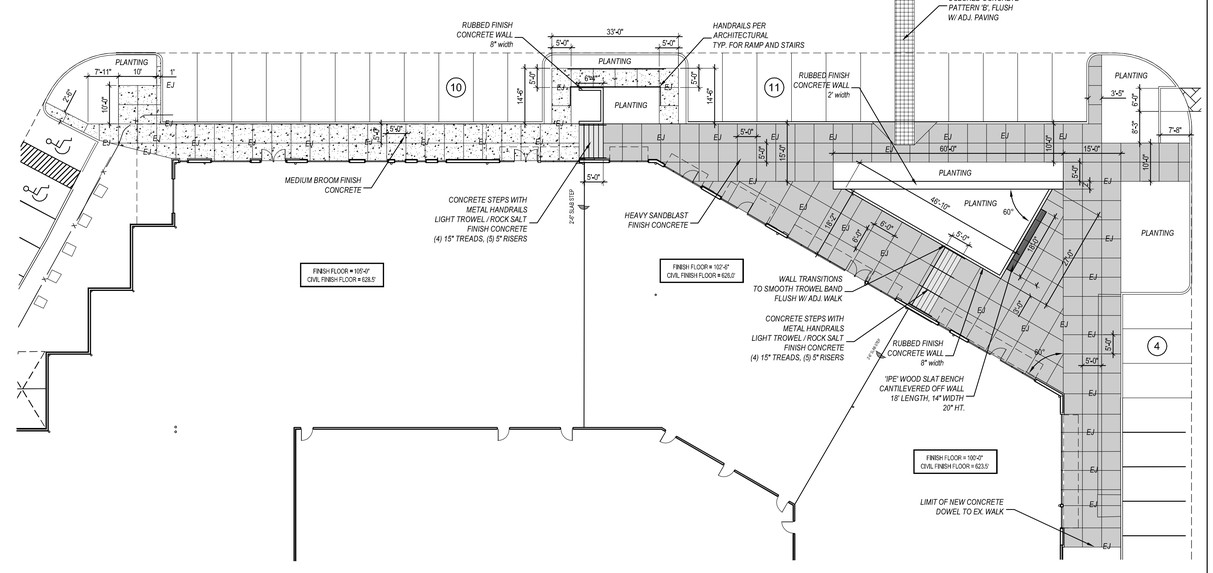

02 HARDSCAPE PLAN BLDG. 800
SCALE: 1" = 16'-0"

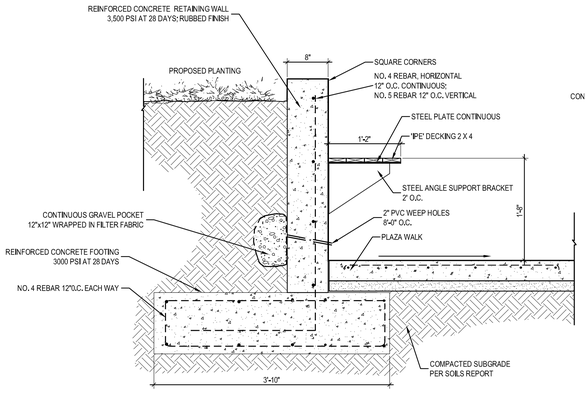

B CONCRETE WALL DETAIL
SCALE:1" = 1'-0"

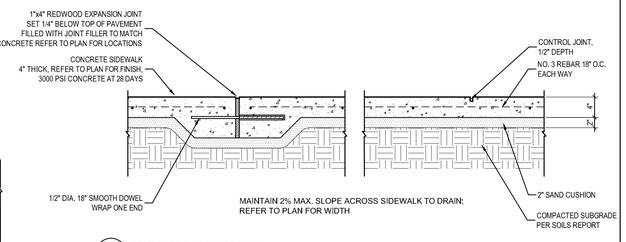

C CONCRETE SIDEWALK DETAIL
SCALE: 1" = 1'-0"

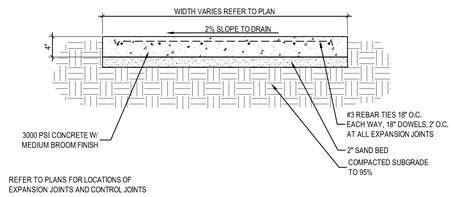

D CONCRETE SIDEWALK DETAIL: CROSS SECTION
SCALE: 1" = 1'-0"

CONCRETE ROCK SALT FINISH NOTES

1. *Apply course grained rock salt as concrete reaches initial set. Application of rock salt to be seeded with hand held spreader. Alternative methods must be approved by Architect / Owner prior to beginning of work.*
2. *Cover concrete with one-mil, plastic sheeting and float and trowel surface to trap salt into concrete surface. Remove plastic sheeting immediately after floating and troweling.*
3. *Saturate concrete surface with water and sweep to remove salt after final set.*
4. *The architect reserves the right to reject any and all work executed by the Contractor which does not meet his/her expectations and Manufacturers Specifications.*
5. *The Contractor shall construct a sample panel 5'-0" by 5'-0" on site, at no expense to the Owner, for approval be the Architect / Owner prior to commencing work.*

CONCRETE NOTES

1. *All concrete shall be in accordance with the A.C.I. standard "Building Code Requirements for Reinforced Concrete" (A.C.I. 318) latest revision.*
2. *All reinforcing steel shall be new domestic deformed billet steel conforming to ASTM A615, Grade 60 (60,000 PSI yield point).*
3. *Reinforcing bar supports and spacers shall be provided in accordance with the Manual of Standard Practice by the Concrete Reinforcing Steel Institute.*
4. *Concrete shall have a minimum compressive strength at 28 days of 3000 PSI.*
5. *Grade beam concrete protection of reinforcement shall be 2" minimum top and sides, 3" minimum bottom.*
6. *Maximum nominal coarse aggregate sizes for concrete in the slabs-on-grade shall be 3/4".*
7. *Concrete slumps shall be 4" maximum, 2" minimum.*
8. *Mortar for walls shall be Type M ASTM C-270, consisting of: one (1) part hydrated Type S Lime, and not more than 3 3/4 parts weill graded masonry sand with all proportions by volume.*

PLANTER NOTES

1. *Planters shall be:*
   F&D TANK HEAD 48" DIA. STANDARD FLANGED & DISHED sandblasted and clear coat sealed
2. *Contractor shall provide turn-key installation of all planters including, but not limited to, shipment, handling, placement, etc.*
3. *Irrigation and drainage holes to be drilled on site by Contractor.*
4. *Bottom of pots to include pea gravel, 2" depth. Filter fabric to seperate pea gravel from planting mix.*

RECORD DRAWINGS (October 2013)
Information Provided By:
BOB MOORE CONSTRUCTION

Good Fulton & Farrell Architects
2808 Fairmount Street
Suite 300
Dallas, Texas 75201
214.303.1500/Tel
214.303.1512/Fax
www.gff.com

© Good Fulton & Farrell 2009

smr
landscape architects, inc.
1708 N. Griffin Street
Dallas, Texas 75202
Tel 214.871.0083
Fax 214.871.0545
Email smr@smr-la.com

VILLAGE ON THE PARKWAY
5100 BELT LINE ROAD
Addison, Texas 75254

No.	Date	Item

REVISIONS

BDA Drawn
BDA Checked
BDA Approved

REGISTERED LANDSCAPE ARCHITECT
BRIAN D. ADAMS
STATE OF TEXAS
5.25.12

HARDSCAPE PLAN

Project No.	11013.03
Date	05.25.12
Last Revision	

L1.02

SECTION 02900 - LANDSCAPE

PART 1 - GENERAL

1.1 REFERENCED DOCUMENTS

Refer to bidding requirements, special provisions, and schedules for additional requirements.

1.2 DESCRIPTION OF WORK

Work included: Furnish all supervision, labor, materials, services, equipment and appliances required to complete the work covered in conjunction with the landscaping covered in these specifications and landscaping plans, including:

1. Planting (trees, shrubs, and grass)
2. Bed preparation and fertilization
3. Notification of sources
4. Water and Maintenance until final acceptance
5. Guarantee

1.3 REFERENCE STANDARDS

A. American Standard for Nursery Stock published by American Association of Nurserymen: 27 October 1980, Edition; by American National Standards Institute, Inc. (Z60.1) – plant material.

B. American Joint Committee on Horticultural Nomenclature: 1942 Edition of Standardized Plant Names.

C. Texas Association of Nurserymen, Grades and Standards.

D. Hortis Third, 1976 - Cornell University

1.4 NOTIFICATION OF SOURCES AND SUBMITTALS

A. The Contractor shall, within ten (10) days following acceptance of bid, notify the Architect/Owner of the sources of plant materials and bed preparation required for the project.

B. Samples: Provide representative quantities of sandy loam soil, mulch, bed mix material, gravel, and crushed stone. Samples shall be approved by Architect before use on project.

C. Product Data: Submit complete product data and specifications on all other specified materials.

D. Submit three representative samples of each variety of ornamental trees, shrubs, and groundcover plants for Architect's approval. When approved, tag, install, and maintain as representative samples for final installed plant materials.

E. File Certificates of Inspection of plant material by state, county, and federal authorities with Architect, if required.

F. Soil Analysis: Provide sandy loam soil analysis if requested by the Architect.

JOB CONDITIONS

A. General Contractor to complete the following punch list: Prior to Landscape Contractor initiating any portion of landscape installation, General Contractor shall leave planting bed areas three (3") inches below finish grade of sidewalks, drives and curbs as shown on the drawings. All lawn areas to receive solid sod shall be left one (1") inch below the finish grade of sidewalks, drives, and curbs. All construction debris shall be removed prior to Landscape Contractor beginning any work.

B. General Contractor shall provide topsoil as described in Section 02200 - Earthwork.

C. Storage of materials and equipment at the job site will be at the risk of the Landscape Contractor. The Owner cannot be held responsible for theft or damage.

1.6 MAINTENANCE AND GUARANTEE

A. Maintenance:

1. The Landscape Contractor will be held responsible for the maintenance of all work from the time of planting until final acceptance by the Owner. No trees, shrubs, groundcover or grass will be accepted unless they show a healthy growth and satisfactory foliage conditions.
2. Maintenance shall include watering of trees and plants, cultivation, weeding spraying, edging, pruning of trees, mowing of grass, cleaning up and all other work necessary of maintenance.
3. A written notice requesting final inspection and acceptance should be submitted to the Owner at least seven (7) days prior to completion. An on-site inspection by Owner and Landscape Contractor will be completed prior to written acceptance.
4. After final acceptance of installation, the Landscape Contractor will not be required to do any of the above listed work.

B. Guarantee:

1. Trees shall be guaranteed for a twelve (12) month period after acceptance. Shrubs and groundcover shall be guaranteed for twelve (12) months. The Contractor shall replace all dead materials as soon as weather permits and upon notification of the Owner. Plants, including trees, which have partially died so that shape, size, or symmetry has been damaged, shall be considered subject to replacement. In such cases, the opinion of the Owner shall be final.
   a. Plants used for replacement shall be of the same size and kind as those originally planted and shall be planted as originally specified. All work, including materials, labor and equipment used in replacements, shall carry a twelve (12) month guarantee. Any damage, including ruts in lawn or bed areas, incurred as a result of making replacements shall be immediately repaired.
   b. At the direction of the Owner, plants may be replaced at the start of the next year's planting season. In such cases, dead plants shall be removed from the premises immediately.
   c. When plant replacements are made, plants, soil mix, fertilizer and mulch are to be utilized as originally specified and reinspected for full compliance with Contract requirements. All replacements are to be included under "Work" of this section.
2. The Owner agrees that for the guarantee to be effective, he will water plants at least twice a week during dry periods and cultivate beds once a month after final acceptance.
3. The above guarantee shall not apply where plants die after acceptance because of injury from storms, hail, freeze, insects, diseases, injury by humans, machines or theft.
4. Acceptance for all landscape work shall be given after final inspection by the Owner provided the job is in a completed, undamaged condition, and there is a stand of grass in all lawn areas. At this time, the Owner will assume maintenance on the accepted work.

C. Repairs: Any necessary repairs under the Guarantee must be made within ten (10) days after receiving notice, weather permitting, and in the event the Landscape Contractor does not make repairs accordingly, the Owner, without further notice to Contractor, may provide materials and men to make such repairs at the expense of the Landscape Contractor.

1.7 QUALITY ASSURANCE

A. General: Comply with applicable Federal, State, County and Local regulations governing landscape materials and work

B. Personnel: Employ only experienced personnel who are familiar with the required work. Provide full time supervision by a qualified foreman acceptable to Landscape Architect.

C. Selection of Plant Material:

1. Make contact with suppliers immediately upon obtaining notice of contract acceptance to select and book materials. Develop a program of maintenance (pruning and fertilization) which will insure the purchased materials will meet and/or exceed project specifications.
2. Landscape Architect will provide a key identifying each tree location on site. Written verification will be required to document material selection, source and delivery schedules to site.
3. Owner and/or Architect shall inspect all plant materials when reasonable at place of growth for compliance with requirements for genus, species, cultivar/variety, size and quality.
4. Owner and/or Architect retains the right to further inspect all plant material upon arrival at the site and during installation for size and condition of root balls, limbs, branching habit, insects, injuries, and latent defects.
5. Owner and/or Architect may reject unsatisfactory or defective material at any time during the process of work. Remove rejected materials from the site immediately. Plants damaged in transit or at job site shall be rejected.

1.8 PRODUCT DELIVERY, STORAGE AND HANDLING

A. Preparation:

1. Balled and Burlapped (B&B) Plants: Dig and prepare shipment in a manner that will not damage roots, branches, shape, and future development.
2. Container Grown Plants: Deliver plants in rigid container to hold ball shape and protect root mass.

A. Delivery:

1. Deliver packaged materials in sealed containers showing weight, analysis and name of manufacturer. Protect materials from deterioration during delivery and while stored at site.
2. Deliver only plant materials that can be planted in one day unless adequate storage and watering facilities are available on job site.
3. Protect root balls by heeling in with sawdust or other approved moisture retaining material if not planted within 24 hours of delivery.
4. Protect plants during delivery to prevent damage to root balls or desiccation of leaves. Keep plants moist at all times. Cover all materials during transport.
5. Notify Architect of delivery schedule 72 hours in advance so plant material may be observed upon arrival at job site.
6. Remove rejected plant material immediately from site.
7. To avoid damage or stress, do not lift, move, adjust to plumb, or otherwise manipulate plants by trunk or stems.

PART 2 - PRODUCTS

2.1 PLANTS

A. General: Well-formed No. 1 grade or better nursery grown stock. Listed plant heights are from tops of root balls to nominal tops of plants. Plant spread refers to nominal outer width of the plant, not to the outer leaf tips. Plants will be individually approved by the Architect and his decision as to their acceptability shall be final.

B. Quantities: The drawings and specifications are complimentary. Anything called for on one and not the other is as binding as if shown and called for on both. The plant schedule is an aid to bidders only. Confirm all quantities on plan.

C. Quality and size: Plant materials shall conform to the size given on the plan, and shall be healthy, symmetrical, well-shaped, full branched, and well rooted. The plants shall be free from injurious insects, diseases, injuries to the bark or roots, broken branches, objectionable disfigurements, insect eggs and larvae and are to be of specimen quality.

D. Approval: All plant materials shall be subject to the approval of the Owner. All plants which are found unsuitable in growth, or in any unhealthy, badly shaped, or undersized condition, will be rejected by the Landscape Architect, either before or after planting, and shall be removed at the expense of the Landscape Contractor and replaced with acceptable plants as specified.

E. Trees shall be healthy, full-branched, well-shaped and shall meet the trunk diameter and height requirements of the plant schedule. Balls shall be firm, neat, slightly tapered, and well wrapped in burlap. Any tree loose in the ball or with broken ball at time of planting will be rejected. Balls shall be ten (10") inched in diameter for each one (1") inch of trunk diameter, Measured six (6") inched above ball.
Nomenclature conforms to the customary nursery usage: for clarification, the term "multi-trunk" defines a plant having three (3) or more trunks of nearly equal diameter.

F. Pruning: All pruning of trees and shrubs, as directed by the Landscape Architect, shall be executed by the Landscape Contractor at no additional cost to the Owner.

2.2 SOIL PREPARATION MATERIALS

A. Sandy Loam:

1. Friable, fertile, dark, loamy soil, free of clay lumps, subsoil, stones and other extraneous material and reasonably free of weeds and foreign grasses. Loam containing Dallasgrass or Nutgrass shall be rejected.
2. Physical properties as follows:
   Clay – between 7-27 percent
   Silt – between 15-25 percent
   Sand – less than 52 percent
3. Organic matter shall be 3%-10% of total dry weight.
4. If requested, provide a certified soil analysis conducted by an approved soil testing laboratory verifying that sandy loam meets the above requirements.

B. Organic Material: Compost with a mixture of 80% vegetative matter and 20% animal waste. Ingredients should be a mix of course and fine textured material.

C. Premixed Bedding Soil as supplied by Vital Earth Resources, Gladewater, Texas; Professional Bedding Soil as supplied by Living Earth Technology, Dallas, Texas or Acid Gro Municipal Mix as supplied by Soil Building Systems, Dallas, Texas or approved equal.

D. Sharp Sand: Sharp sand must be free of seeds, soil particles and weeds.

E. Mulch: Double Shredded Hardwood Mulch, partially decomposed, dark brown. Living Earth Technologies or approved equal.

F. Organic Fertilizer: Fertilaid, Sustane, or Green Sense or equal as recommended for required applications. Fertilizer shall be delivered to the site in original unopened containers, each bearing the manufacturer's guaranteed statement of analysis.

A. Commercial Fertilizer: 10-20-10 or similar analysis. Nitrogen source to be a minimum 50% slow release organic Nitrogen (SCU or UF) with a minimum 8% sulphur and 4% iron, plus micronutrients.

B. Peat: Commercial sphagnum peat moss or partially decomposed shredded pine bark or other approved organic material.

2.3 MISCELLANEOUS MATERIALS

A. Steel Edging: Shall be Ryerson "Estate Curbing", 1/8" x 4" with stakes 4' on center.

B. Staking Material for Shade Trees:

1. Post: Studded T-Post, #1 Armco with anchor plate; 6'-0" length; paint green.
2. Wire: 12 gauge, single strand, galvanized wire.
3. Rubber hose: 2 ply, fiber reinforced hose, minimum ½ inch inside diameter. Color: Black.

C. Gravel: Washed native pea gravel, graded 1 in. to 1-1/2 in.

D. Filter Fabric: Mirafi 140N by Celanese Fibers Marketing Company, available at Loftland Co., (214) 631-5250 or approved equal.

PART 3 - EXECUTION

3.1 BED PREPARATION & FERTILIZATION

A. Landscape Contractor to inspect all existing conditions and report any deficiencies to the Owner.

B. All planting areas shall be conditioned as follows:

1. Prepare new planting beds by scraping away existing grass and weeds as necessary. Till existing soil to a depth of six (6") inches prior to placing compost and fertilizer. Apply fertilizer as per manufacturers recommendations. Add six (6") inches of compost and till into a depth of six (6") inches of the topsoil. Apply organic fertilizer such as Sustane or Green Sense at the rate of twenty (20) pounds per one thousand (1,000) square feet.
2. All planting areas shall receive a two (2") inch layer of specified mulch.
3. Backfill for tree pits shall be as follows: Use existing top soil on site (use imported topsoil as needed) free from large clumps, rocks, debris, caliche, subsoils, etc., placed in nine (9") inch layers and watered in thoroughly.

C. Grass Areas:

1. Areas to be Solid Sod Bermudagrass: Blocks of sod should be laid joint to joint, (staggered joints) after fertilizing the ground first. Roll grass areas to achieve a smooth, even surface. The joints between the blocks of sod should be filled with topsoil where they are evidently gaped open, then watered thoroughly.
2. Areas to be Hydromulch Common Bermudagrass: Hydromulch with bermudagrass seed at a rate of two (2) pounds per one thousand (1,000) square feet. Use a 4' x 8' batter board against the bed areas.

3.2 INSTALLATION

A. Maintenance of plant materials shall begin immediately after each plant is delivered to the site and shall continue until all construction has been satisfactorily accomplished.

B. Plant materials shall be delivered to the site only after the beds are prepared and area ready for planting. All shipments of nursery materials shall be thoroughly protected from the drying winds during transit. All plants which cannot be planted at once, after delivery to the site, shall be well protected against the possibility of drying by wind and sun. Balls of earth of B & B plants shall be kept covered with soil or other acceptable material. All plants remain the property of the Contractor until final acceptance.

C. Position the trees and shrubs in their intended location as per plan.

D. Notify the Landscape Architect for inspection and approval of all positioning of plant materials.

E. Excavate pits with vertical sides and horizontal bottom. Tree pits shall be large enough to permit handling and planting without injury to balls of earth or roots and shall be of such depth that, when planted and settled, the crown of the plant shall bear the same relationship to the finish grade as it did to soil surface in original place of growth.

F. Shrub and tree pits shall be no less than two (2') feet, twenty-four (24") inches, wider than the lateral dimension of earth ball and six (6") inches deeper than it's vertical dimension. Remove and haul from site all rocks and stones over one (1") inch in diameter. Plants should be thoroughly moist before removing containers.

G. Dig a wide, rough sided hole exactly the same depth as the height of the ball, especially at the surface of the ground. The sides of the hole should be rough and jagged, never slick or glazed.

H. Percolation Test: Fill the hole with water. If the water level does not percolate within 24 hours, the tree needs to move to another location or have drainage added. Install a PVC stand pipe per tree planting detail as approved by the Landscape Architect.

I. Backfill only with 5 parts existing soil or sandy loam and 1 part bed preparation. When the hole is dug in solid rock, topsoil from the same area should not be used. Carefully settle by watering to prevent air pockets. Remove the burlap from the top 1/3 of the ball, as well as all nylon, plastic string and wire mesh. Container trees will usually be pot bound, if so follow standard nursery practice of 'root scoring'.

J. Do not wrap trees.

K. Do not over prune.

L. Mulch the top of the ball. Do not plant grass all the way to the trunk of the tree. Leave the area above the top of the ball and mulch with at least two (2") inches of specified mulch.

M. All plant beds and trees to be mulched with a minimum settled thickness of two (2") inches over the entire bed or pit.

N. Obstruction below ground: In the event that rock, or underground construction work or obstructions are encountered in any plant pit excavation work to be done under this section, alternate locations may be selected by the Owner. Where locations cannot be changed, the obstructions shall be removed to a depth of not less than three (3') feet below grade and no less than six (6") inches below the bottom of ball when plant is properly set at the required grade. The work of this section shall include the removal from the site of such rock or underground obstructions encountered at the cost of the Landscape Contractor.

O. Trees and large shrubs shall be staked as site conditions require. Position stakes to secure tree against seasonal prevailing winds.

P. Pruning and Mulching: Pruning shall be directed by the Architect and shall be pruned in accordance with standard horticultural practice following Fine Pruning, Class I pruning standards provided by National Arborist Association.

1. Dead wood or suckers and broken badly bruised branches shall be removed. General tipping of the branched is not permitted. Do not cut terminal branches.
2. Pruning shall be done with clean, sharp tools.
3. Immediately after planting operations are completed, all tree pits shall be covered with a layer of organic material two (2") inches in depth. This limit of the organic material

Q. Steel Curbing Installation:

1. Curbing shall be aligned as indicated on plans. Stake out limits of steel curbing and obtain Owners approval prior to installation.
2. All steel curbing shall be free of kinks and abrupt bends.
3. Top of curbing shall be 3/4" maximum height above grade.
1. Stakes are to be installed on the planting bed side of the curbing, as opposed to the grass side.
2. Do not install steel edging along sidewalks.
3. Cut steel edging at 45 degree angle where edging meets sidewalk.

3.3 CLEANUP AND ACCEPTANCE

A. Cleanup: During the work, the premises shall be kept neat and orderly at all times. Storage areas for all materials shall be so organized that they, too, are neat and orderly. All trash and debris shall be removed from the site as work progresses. Keep paved areas clean by sweeping or hosing at end of each days work.

END OF SECTION

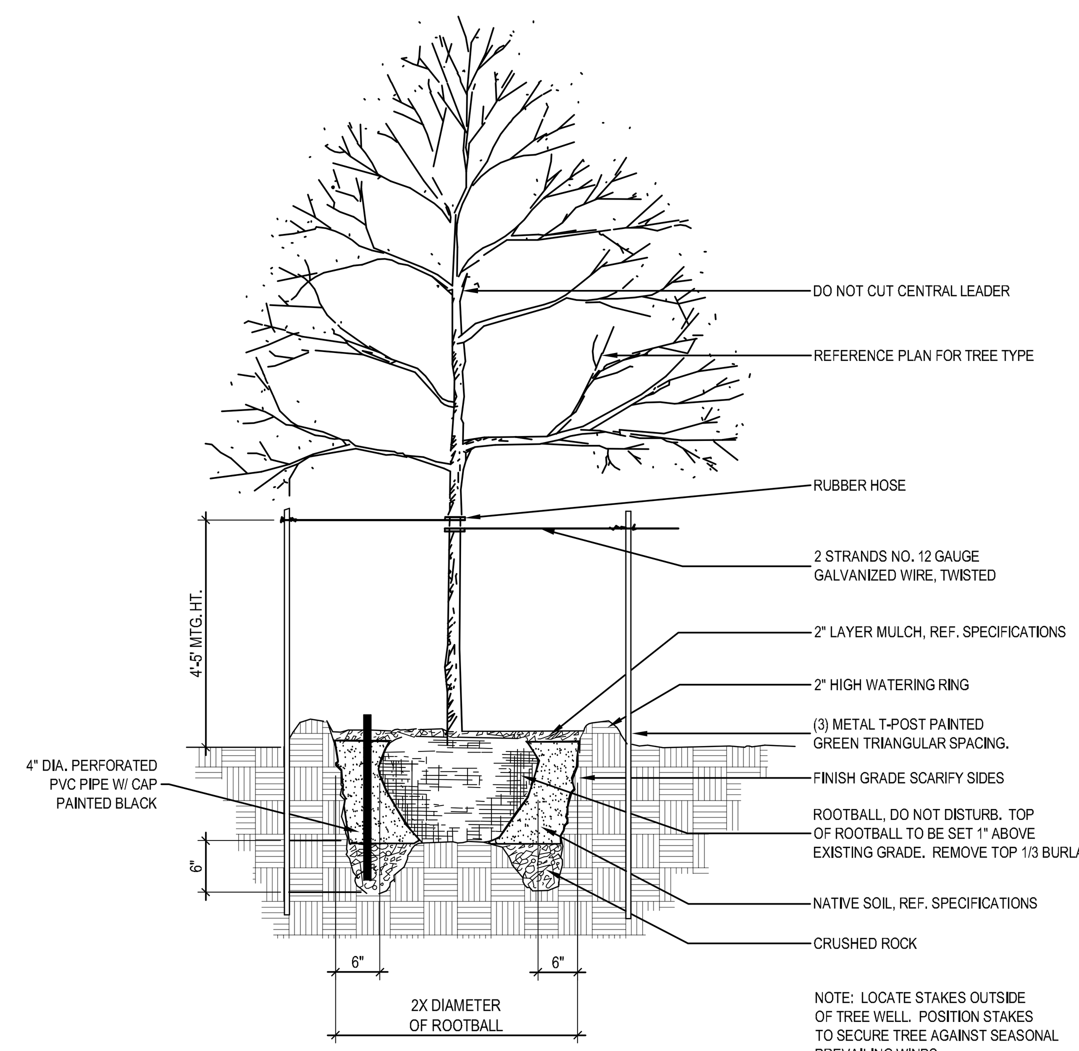

01 TREE PLANTING DETAIL
NOT TO SCALE

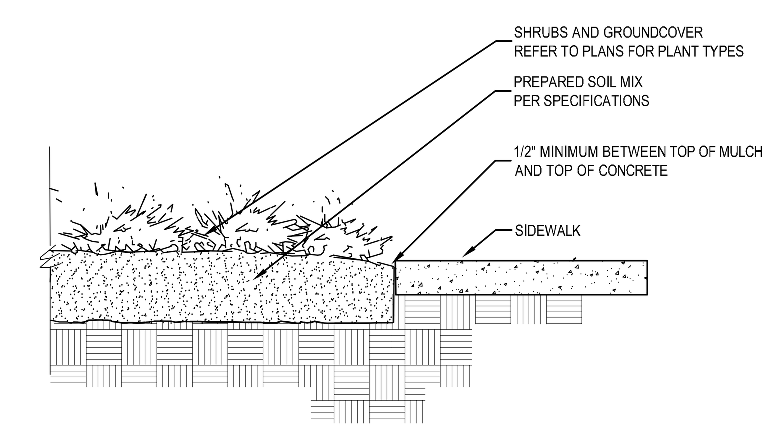

04 SIDEWALK / MULCH DETAIL
no steel along sidewalks
NOT TO SCALE

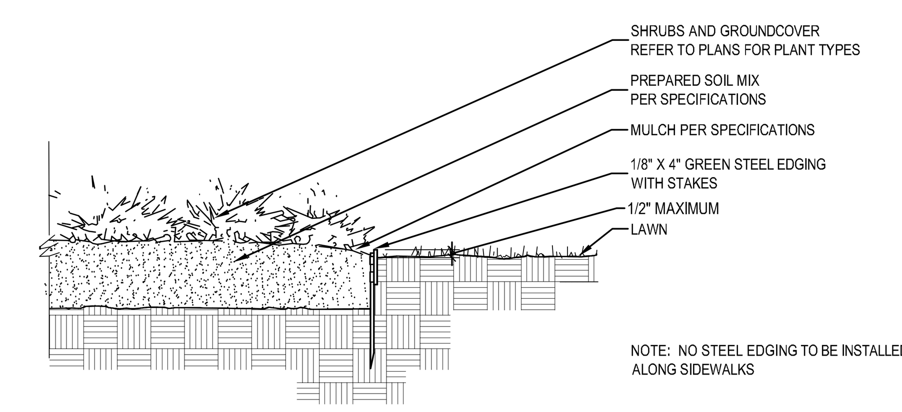

02 STEEL EDGING DETAIL
NOT TO SCALE

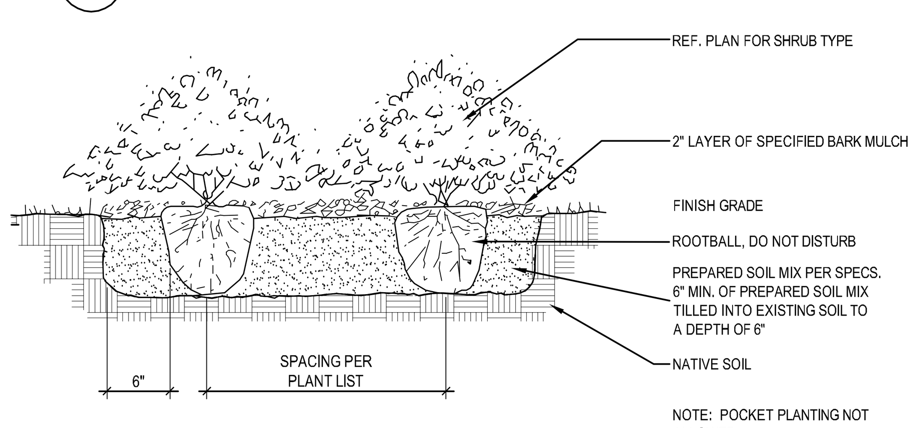

03 SHRUB / GROUNDCOVER DETAIL
NOT TO SCALE

RECORD DRAWINGS
(October 2013)
Information Provided By:
BOB MOORE CONSTRUCTION

CALL BEFORE YOU DIG 1-800-245-4545 TEXAS ONE CALL SYSTEM

Good Fulton & Farrell Architects
2808 Fairmount Street
Suite 300
Dallas, Texas 75201
214.303.1500/Tel
214.303.1512/Fax
www.gff.com

© Good Fulton & Farrell 2009

smr
landscape architects, inc.
1708 N. Griffin Street
Dallas, Texas 75202
Tel 214.871.0083
Fax 214.871.0545
Email smr@smr-la.com

VILLAGE ON THE PARKWAY
5100 BELT LINE ROAD
Addison, Texas 75254

No.	Date	Item

REVISIONS

BDA
Drawn
BDA
Checked
BDA
Approved

REGISTERED LANDSCAPE ARCHITECT BRIAN D. ADAMS 1761 STATE OF TEXAS
5.25.12

LANDSCAPE SPECIFICATIONS

Project No.	11013.03
Date	05.25.12
Last Revision	

L1.03

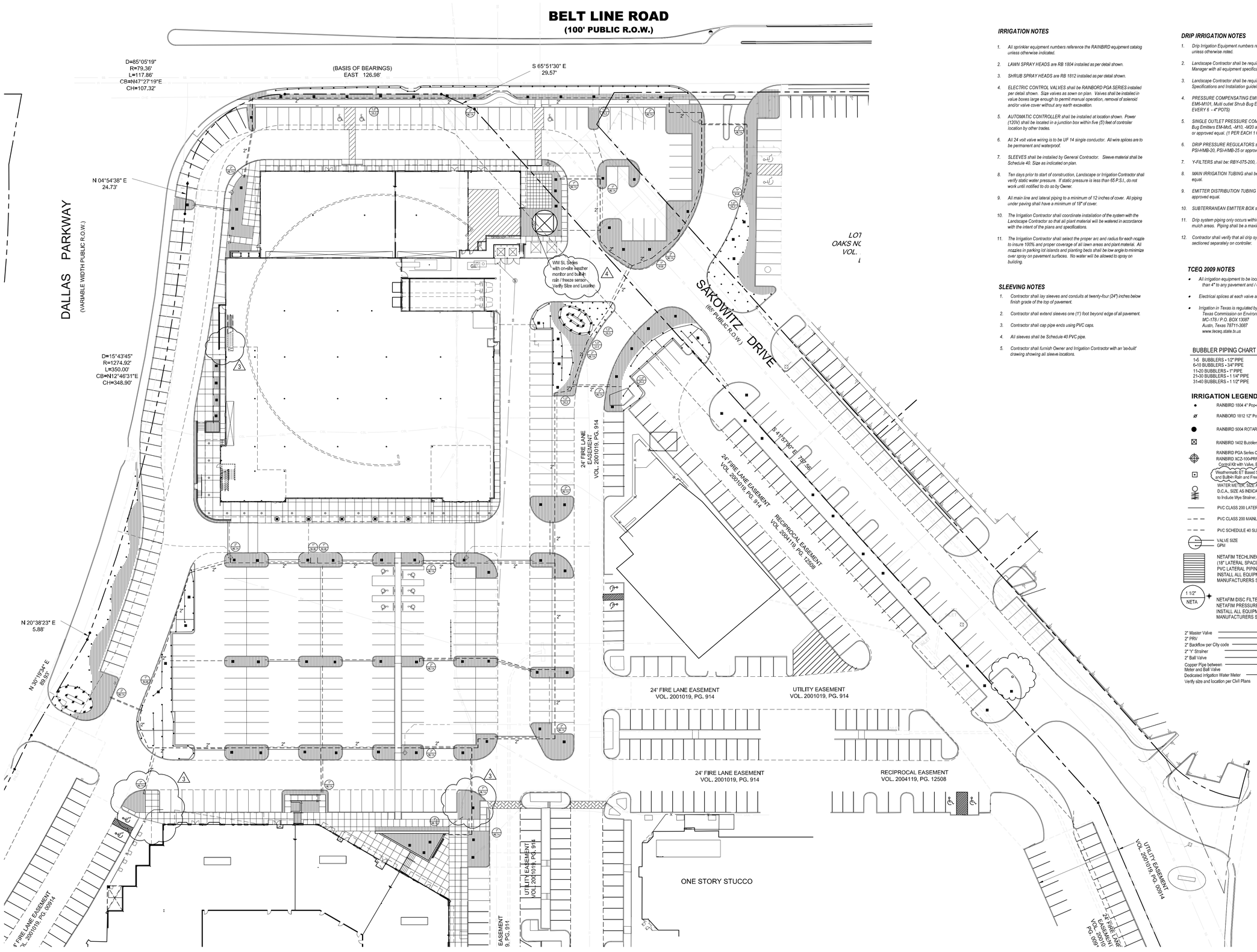

IRRIGATION NOTES

1. All sprinkler equipment numbers reference the RAINBIRD equipment catalog unless otherwise indicated.
2. LAWN SPRAY HEADS are RB 1804 installed as per detail shown.
3. SHRUB SPRAY HEADS are RB 1812 installed as per detail shown.
4. ELECTRIC CONTROL VALVES shall be RAINBORD PGA SERIES installed per detail shown. Size valves as sown on plan. Valves shall be installed in value boxes large enough to permit manual operation, removal of solenoid and/or valve cover without any earth excavation.
5. AUTOMATIC CONTROLLER shall be installed at location shown. Power (120V) shall be located in a junction box within five (5) feet of controller location by other trades.
6. All 24 volt valve wiring is to be UF 14 single conductor. All wire splices are to be permanent and waterproof.
7. SLEEVES shall be installed by General Contractor. Sleeve material shall be Schedule 40. Size as indicated on plan.
8. Ten days prior to start of construction, Landscape or Irrigation Contractor shall verify static water pressure. If static pressure is less than 65 P.S.I., do not work until notified to do so by Owner.
9. All main line and lateral piping to a minimum of 12 inches of cover. All piping under paving shall have a minimum of 18" of cover.
10. The Irrigation Contractor shall coordinate installation of the system with the Landscape Contractor so that all plant material will be watered in accordance with the intent of the plans and specifications.
11. The Irrigation Contractor shall select the proper arc and radius for each nozzle to insure 100% and proper coverage of all lawn areas and plant material. All nozzles in parking lot islands and planting beds shall be low angle to minimize over spray on pavement surfaces. No water will be allowed to spray on building.

SLEEVING NOTES

1. Contractor shall lay sleeves and conduits at twenty-four (24") inches below finish grade of the top of pavement.
2. Contractor shall extend sleeves one (1') foot beyond edge of all pavement.
3. Contractor shall cap pipe ends using PVC caps.
4. All sleeves shall be Schedule 40 PVC pipe.
5. Contractor shall furnish Owner and Irrigation Contractor with an 'as-built' drawing showing all sleeve locations.

DRIP IRRIGATION NOTES

1. Drip Irrigation Equipment numbers reference Rainbird Equipment Catalog unless otherwise noted.
2. Landscape Contractor shall be required to supply Owner's Construction Manager with all equipment specifications and maintenance guidelines.
3. Landscape Contractor shall be required to follow Manufacturer's Specifications and Installation guidelines for drip system.
4. PRESSURE COMPENSATING EMITTERS shall be: Multioutlet Rain Bug EM6-M101, Multi outlet Shrub Bug EMT6-M101 or approved equal. (1 PER EVERY 6 - 4" POTS)
5. SINGLE OUTLET PRESSURE COMPENSATING EMITTERS shall be: Rain Bug Emitters EM-MxS, -M10, -M20 and Shrub Bug Emitters EMT-M10, -M20 or approved equal. (1 PER EACH 1 OR 5 GAL PLANT)
6. DRIP PRESSURE REGULATORS shall be: PSI-HLA-15, PSI-HLA-20, PSI-HMB-20, PSI-HMB-25 or approved equal.
7. Y-FILTERS shall be: RBY-075-200, RBY-100-200 or approved equal.
8. MAIN IRRIGATION TUBING shall be:RBT-150P,RBT-160V or approved equal.
9. EMITTER DISTRIBUTION TUBING shall be: RBT-150P, RBT-160V or approved equal.
10. SUBTERRANEAN EMITTER BOX shall be: SEB-6 or approved equal.
11. Drip system piping only occurs within shrub / groundcover beds and rock mulch areas. Piping shall be a maximum 4" depth and a minimum 2" depth.
12. Contractor shall verify that all drip system valves and spray system valves are sectioned separately on controller.

TCEQ 2009 NOTES

- All irrigation equipment to be located no closer than 4" to any pavement and / or structure
- Electrical splices at each valve and controller only.
- Irrigation in Texas is regulated by the Texas Commission on Environmental Quality (TECQ) MC-178 / P.O. BOX 13087 Austin, Texas 78711-3087 www.tceq.state.tx.us

BUBBLER PIPING CHART

1-5 BUBBLERS - 1/2" PIPE
6-10 BUBBLERS - 3/4" PIPE
11-20 BUBBLERS - 1" PIPE
21-30 BUBBLERS - 1 1/4" PIPE
31-40 BUBBLERS - 1 1/2" PIPE

IRRIGATION LEGEND

- RAINBIRD 1804 4" Pop-up Spray Head with a Plastic MPR Nozzle
- RAINBORD 1812 12" Pop-up Spray Head with a Plastic MPR Nozzle
- RAINBIRD 5004 ROTARY HEADS
- RAINBIRD 1402 Bubblers
- RAINBIRD PGA Series Control Valves
- RAINBIRD XCZ-100-PRF Med. Flow Zone Control Kit with Valve, Basket Filter, and Pressure Regulator
- Weathermatic ET Based System Controller with Weather Monitor and Built-in Rain and Freeze Sensor (4)
- WATER METER, SIZE AS INDICATED
- D.C.A., SIZE AS INDICATED to Include Wye Strainer, Isolation Valve, Master Valve, and Pressure Regulator
- PVC CLASS 200 LATERAL LINE
- PVC CLASS 200 MAINLINE
- PVC SCHEDULE 40 SLEEVING
- VALVE SIZE / GPM
- NETAFIM TECHLINE#TLDL6-1210 (18" LATERAL SPACING, 12" EMITTER SPACING) PVC LATERAL PIPING SIZED AS REQUIRED INSTALL ALL EQUIPMENT ACCORDING TO MANUFACTURERS SPECIFICATIONS
- 1 1/2" NETA — NETAFIM DISC FILTER #DF100-080 NETAFIM PRESSURE REGULATOR #PRV15025 INSTALL ALL EQUIPMENT ACCORDING TO MANUFACTURERS SPECIFICATIONS

2" Master Valve
2" PRV
2" Backflow per City code
2" 'Y' Strainer
2" Ball Valve
Copper Pipe between Meter and Ball Valve
Dedicated Irrigation Water Meter
Verify size and location per Civil Plans

RECORD DRAWINGS (October 2013)
Information Provided By:
BOB MOORE CONSTRUCTION

01 IRRIGATION PLAN
SCALE: 1" = 30'-0"

0 15 30 60

Good Fulton & Farrell Architects
2808 Fairmount Street
Suite 300
Dallas, Texas 75201
214.303.1500/Tel
214.303.1512/Fax
www.gff.com

© Good Fulton & Farrell 2009

smr
landscape architects, inc.
1708 N. Griffin Street
Dallas, Texas 75202
Tel 214.871.0083
Fax 214.871.0545
Email smr@smr-la.com

VILLAGE ON THE PARKWAY
5100 BELT LINE ROAD
Addison, Texas 75254

No.	Date	Item
4	09.21.12	CITY COMMENTS
3	08.17.12	ASI #1

REVISIONS

BDA Drawn
BDA Checked
BDA Approved

STATE OF TEXAS — JON TUCK — 13808 — LICENSED IRRIGATOR — 9.21.12

IRRIGATION PLAN

Project No.	11013.03
Date	05.25.12
Last Revision	

L2.01

SECTION 02810 - IRRIGATION

PART 1 - GENERAL

1.1 SCOPE

A. Provide complete sprinkler installation as detailed and specified herein, includes furnishing all labor, materials, and equipment for the proper installation. Work includes but is not limited to:

1. Trenching and backfill
2. Automatic controlled system.
3. Upon completion of installation, supply drawings showing details of construction including location of mainline piping, manual and automatic valves, electrical supply to valves, and specifically exact location of automatic valves.

B. All sleeves as shown on plans will be furnished by General Contractor. Meter and power source to be provided by General Contractor.

1.2 RELATED WORK SPECIFIED ELSEWHERE

A. See Irrigation Plans. See plans for controller, heads, and valves.

B. Section 02900-Landscape

C. Section 02811-Underground Irrigation Sleeve and Utility Conduits

1.3 APPLICABLE STANDARDS

A. America Standard for Testing and Materials (ASTM) – Latest edition.

1. D2241 Poly (Vinyl Chloride) (PVC) Plastic Pipe (SDR-PR)
2. D2464 Poly (Vinyl Chloride) (PVC) Plastic Pipe Fittings, Thread, Schedule 80
3. D2455 Poly (Vinyl Chloride) (PVC) Plastic Pipe Fittings, Schedule 40
4. D2467 Poly (Vinyl Chloride) (PVC) Plastic Pipe Fittings, Socket Type, Schedule 80
5. D2564 Solvent Cements for Poly (Vinyl Chloride) (PVC) Plastic Pipe and Fittings
6. D2287 Flexible Poly Vinyl Chloride (PVC) Plastic Pipe
7. F656 Poly Vinyl Chloride (PVC) Solvent Weld Primer
8. D2855 Making Solvent – Cemented Joints with Poly (Vinyl Chloride) (PVC) Pipe and Fittings

1.4 MAINTENANCE AND GUARANTEE

A. Materials and workmanship shall be fully guaranteed for one (1) year after final acceptance.

B. Provide maintenance of system, including raising and lowering of heads to compensate for lawn growth, cleaning and adjustment of heads, raising and lowering of shrub heads to compensate for shrub growth, for one (1) year after completion of installation.

C. Guarantee is limited to repair and replacement of defective materials or workmanship, including repair of backfill settlement.

1.5 SUBMITTALS

A. Procedure: Comply with Division I requirements.

B. Product Data: Submit (5) copies of equipment manufacturer's specifications and literature for approval by Landscape Architect prior to installation.

C. Project Record Documents

1. Comply with Division I requirements.
2. Locate by written dimension, routing of mainline piping, remote control valves and quick coupling valves. Locate mainlines by single dimensions from permanent site features provided they run parallel to these elements. Locate valves, intermediate electrical connections, and quick couplers by two dimensions from a permanent site feature at approximately 70 degrees to each other.
3. When dimensioning is complete, transpose work to mylar reproducible tracings.
4. Submit completed tracings prior to final acceptance. Mark tracings "Record Prints Showing Significant Changes". Date and sign drawings.
5. Provide three complete operation manuals and equipment brochures neatly bound in a hard back three-ring binder. Include product data on all installed materials. Include warranties and guarantees extended to the Owner by the manufacturer of all equipment.

D. Quick Coupler Keys: Provide 3 coupler keys with boiler drains attached using brass reducer.

E. Controller Keys: Provide three sets of keys to controller enclosure(s).

F. Use of materials differing in quality, size, or performance from those specified will only be allowed upon written approval of the Landscape Architect. The decision will be based on comparative ability of material or article to perform fully all purposes of mechanics and general design considered to be possessed by item specified.

G. Bidders desiring to make a substitution for specified sprinklers shall submit manufacturer's catalog sheet showing full specification of each type sprinkler proposed as a substitute, including discharge in GPM maximum allowable operating pressure at sprinkler.

H. Approval of substitute sprinkler shall not relieve Irrigation Contractor of his responsibility to demonstrate that final installed sprinkler system will operate according to intent of originally designed and specified system.

I. It is the responsibility of the Irrigation Contractor to demonstrate that final installed sprinkler system will operate according to intent of originally designed and specified system. If Irrigation Contractor notes any problems in head spacing or potential coverage, it is his responsibility to notify the Landscape Architect in writing, before proceeding with work. Irrigation Contractor guarantees 100% coverage of all areas to be irrigated.

1.6 TESTING

A. Perform testing required with other trades, including earthwork, paving, plumbing, electrical, etc. to avoid unnecessary cutting, patching and boring.
B. Wire Connectors: Waterproof splice kit connectors. Type DBY by 3M.

2.6 SCHEDULE 80 PVC NIPPLES

A. Composed of Standard Schedule 40 PVC Fittings and PVC meeting noted standards. No clamps or wires may be used. Nipples for heads and shrub risers to be nominal one-half inch diameter by eight inches long, where applicable.

B. Polyethylene nipples six (6") inches long to be used on all pop-up spray heads.

2.7 MATERIALS - See Irrigation Plan

A. Sprinkler heads in lawn area as specified on plan.

B. PVC Pipe: Class 200, SPR 21
Copper Tubing (City Connection): Type "M"
24V Wire: Size 14, Type U.F.

C. Electric valves to be all plastic construction as indicated on plans.

D. Refer to drawing for backflow prevention requirements and flow valve.

PART 3 - EXECUTION

3.1 INSTALLATION - GENERAL

A. Staking: Before installation is started, place a stake where each sprinkler is to be located, in accordance with drawing. Staking shall be approved by Landscape Architect before proceeding.

B. Excavations: Excavations are unclassified and include earth, loose rock, rock or any combination thereof, in wet or dry state. Backfill trenches with material that is suitable for compaction and contains no lumps, clods rock, debris, etc. Special backfill specifications, if furnished take preference over this general specification.

C. Backfill: Flood or hand-tamp to prevent after settling. Hand rake trenches and adjoining area to leave grade in as good or better condition than before installation.

D. Piping Layout: Piping layout is diagrammatic. Route piping around trees and shrubs in such a manner as to avoid damage to plantings. Do not dig within ball of newly planted trees or shrubs.

3.2 PIPE INSTALLATION

A. Sprinkler Mains: Install a four (4") inch minimum trench with a minimum of eighteen (18") inches of cover.

B. Lateral Piping: Install a four (4") inch wide minimum trench deep enough to allow for installation of sprinkler heads and valves, but in no case, with less than twelve (12") of cover.

C. Trenching: Remove lumber, rubbish, and large rocks from trenches. Provide firm, uniform bearing for entire length of each pipe line to prevent uneven settlement. Wedging or blocking of pipe will not be permitted. Remove foreign matter or dirt from inside of pipe before welding, and keep piping clean by approved means during and after laying of pipe.

3.3 PVC PIPE AND FITTING ASSEMBLY

A. Solvent: Use only solvent recommended by manufacturer to make solvent-welded joints. Thoroughly clean pipe and fittings of dirt, dust and moisture before applying solvent.

B. PVC to metal connection: Work metal connections first. Use a non-hardening pipe dope such as Permatex No. 2 on threaded PVC adapters into which pipe may be welded.

3.4 COPPER TUBING AND FITTING ASSEMBLY

Clean pipe and fitting thoroughly and lightly sand pipe connections to remove residue from pipe. Attach fittings to tubing in an approved manner using 50-50 soft solid core solder.

3.5 POP-UP SPRAY HEADS

Supply pop-up spray heads in accordance with materials list and plan. Attach sprinkler to lateral piping with a semi-flexible polyethylene nipple not less than three (3") inches or more than six (6") inches long.

3.6 VALVES

Supply valves in accordance with materials list and sized according to drawings. Install valves in a level position in accordance with Manufacturer's Specifications. See plan for typical installation of electric valve, valve box.

3.7 WIRING

A. Supply wire from the automatic sprinkler controls to the valves. No conduit will be required for U.F. wire unless otherwise noted on the plan. Wire shall be tucked under the piping.

B. A separate wire is required from the control to each electric valve. A common neutral wire is also required from each control to each of the valves served by each particular control.

C. Bundle multiple wires and tape them together at ten (10') foot intervals. Install ten (10") inch expansion coil at not more than one hundred (100') foot intervals. Make splices waterproof.

3.8 AUTOMATIC SPRINKLER CONTROLS

Supply in accordance with Irrigation Plan. Install according to manufacturer's recommendations.

3.9 TESTING

A. Sprinkler Mains: Test sprinkler main only for a period of twelve (12) to fourteen (14) hours under normal pressure. If leaks occur, replace joint or joints and repeat test.
B. Complete tests prior to backfilling. Sufficient backfill material may be placed in trenches between fittings to insure stability of line under pressure. In each case, leave fittings and couplings open to visual inspection for full period of test.

3.10 FINAL ADJUSTMENT

After installation has been completed, make final adjustment of sprinkler system in preparation for Landscape Architect's final inspection. Completely flush system to remove debris from lines and turning on system. Check sprinklers for proper operation and proper alignment for direction of flow. Check each section of spray heads for operating pressure and balance to other sections by use of flow adjustment and top of each valve. Check nozzling for proper coverage. Prevailing wind conditions may indicate that arch of angle of spray should be other than shown on drawings. In this case, change nozzles to provide correct coverage.

END OF SECTION

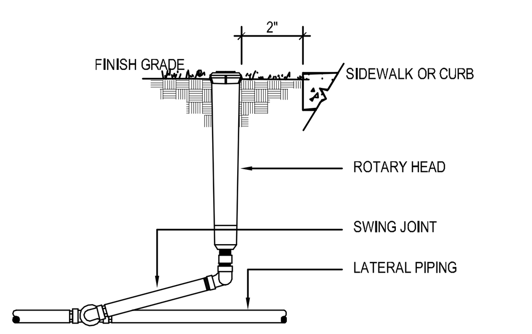

01 ROTARY HEAD
NOT TO SCALE

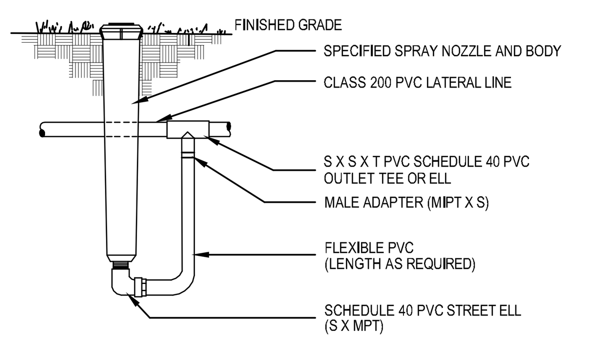

02 HIGH POP-UP SPRAY ASSEMBLY
NOT TO SCALE

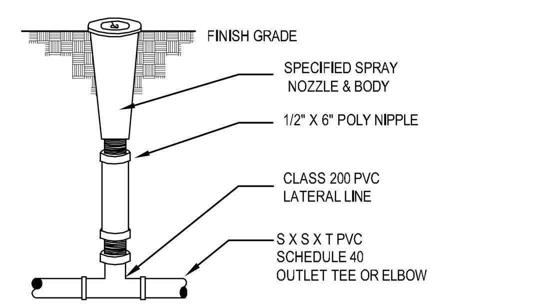

03 POP-UP LAWN SPRAY ASSEMBLY
NOT TO SCALE

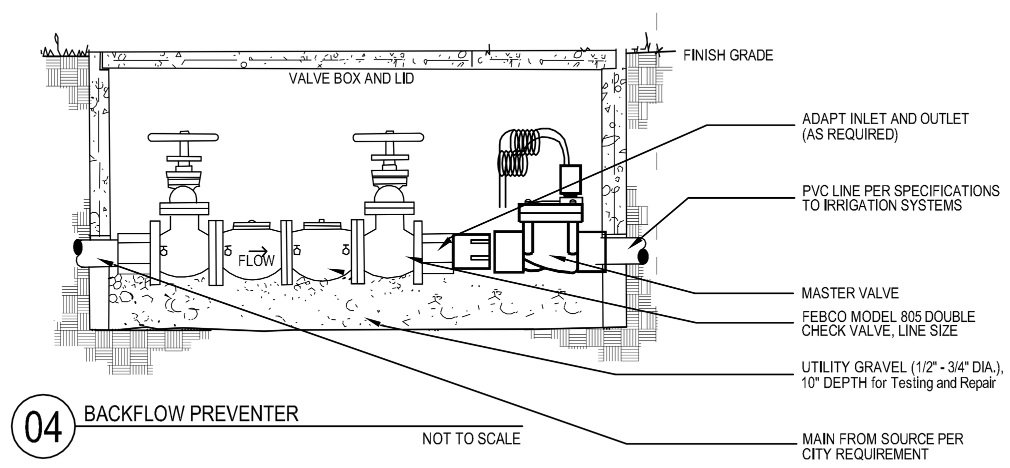

04 BACKFLOW PREVENTER
NOT TO SCALE

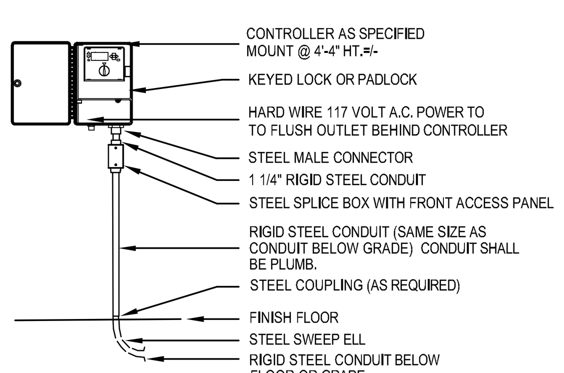

05 WALL MOUNTED CONTROLLER
NOT TO SCALE

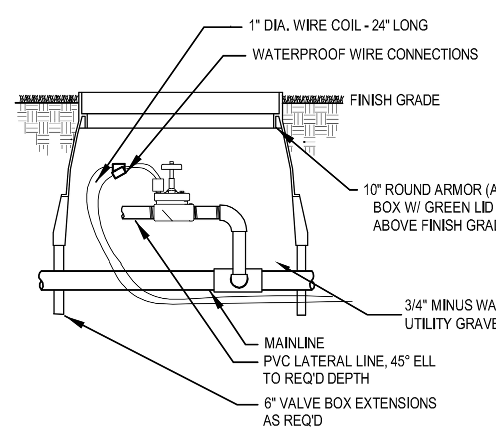

06 REMOTE CONTROL VALVE
NOT TO SCALE

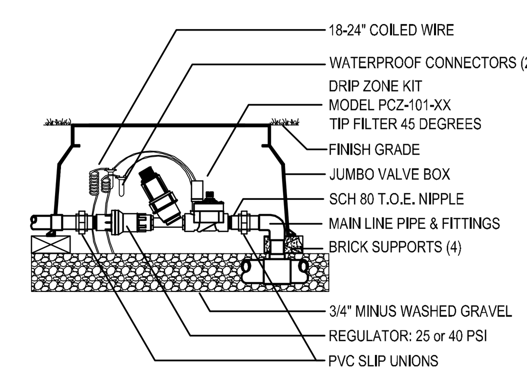

07 DRIP CONTROL VALVE
NOT TO SCALE

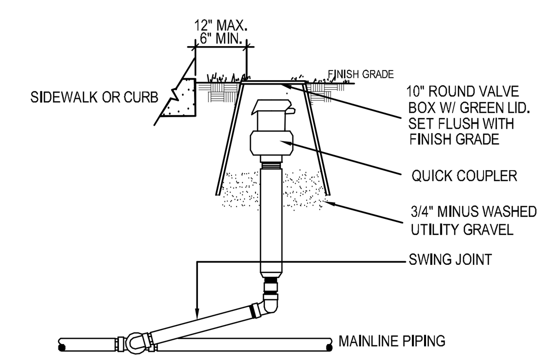

08 QUICK COUPLER
NOT TO SCALE

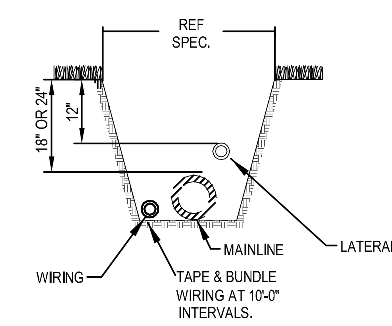

09 TRENCH DETAIL
NOT TO SCALE

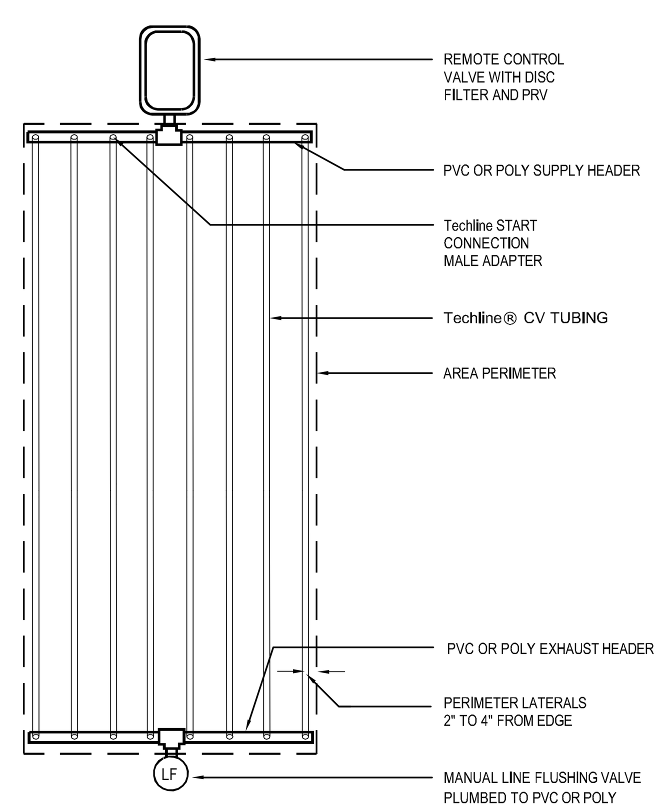

10 TechLine CV END FEED LAYOUT
NOT TO SCALE

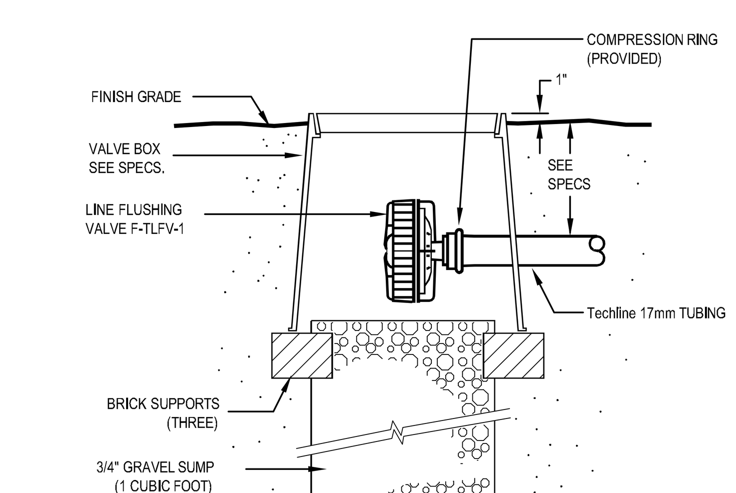

11 TechLine LINE FLUSHING VALVE
NOT TO SCALE

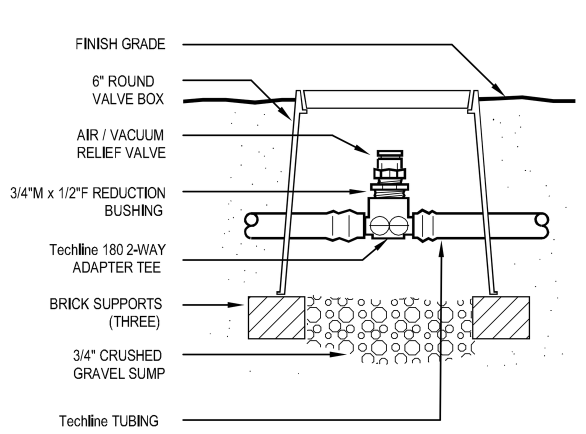

12 TechLine AIR/VACUUM RELIEF
NOT TO SCALE

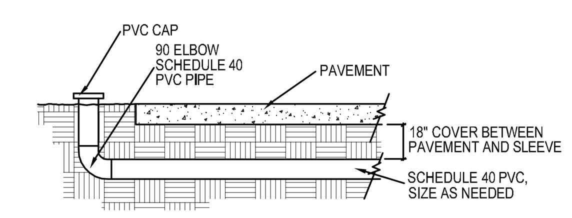

13 SLEEVE DETAIL
NOT TO SCALE

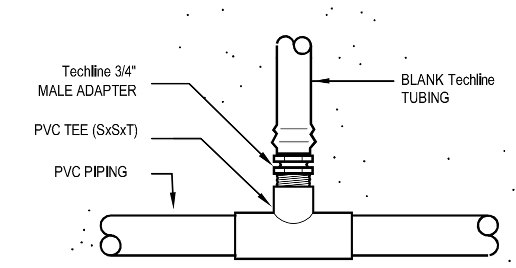

14 TechLine START CONNECTION
NOT TO SCALE

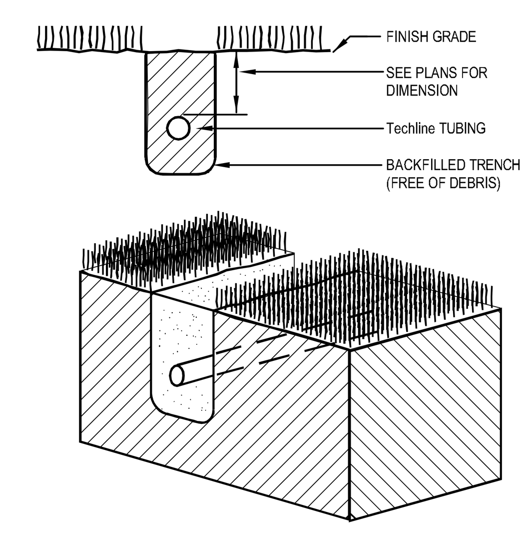

15 TechLine TRENCHING
NOT TO SCALE

RECORD DRAWINGS
(October 2013)
Information Provided By:
BOB MOORE CONSTRUCTION

CALL BEFORE YOU DIG 1-800-245-4545 TEXAS ONE CALL SYSTEM

Good Fulton & Farrell Architects
2808 Fairmount Street
Suite 300
Dallas, Texas 75201
214.303.1500/Tel
214.303.1512/Fax
www.gff.com

© Good Fulton & Farrell 2009

smr
landscape architects, inc.
1708 N. Griffin Street
Dallas, Texas 75202
Tel 214.871.0083
Fax 214.871.0545
Email smr@smr-la.com

VILLAGE ON THE PARKWAY

5100 BELT LINE ROAD
Addison, Texas 75254

No.	Date	Item

REVISIONS

BDA
Drawn
BDA
Checked
BDA
Approved

REGISTERED LANDSCAPE ARCHITECT BRIAN D. ADAMS 1761 STATE OF TEXAS
5.25.12

IRRIGATION SPECIFICATIONS

Project No.	11013.03
Date	05.25.12
Last Revision	

L2.02