NORTH TEXAS TOLLWAY AUTHORITY

CONTRACT NO. DNT-290

CITY COPY

ADDISON AIRPORT TUNNEL
BARRIER TOLL PLAZA

DECEMBER, 1997

INDEX OF DRAWINGS

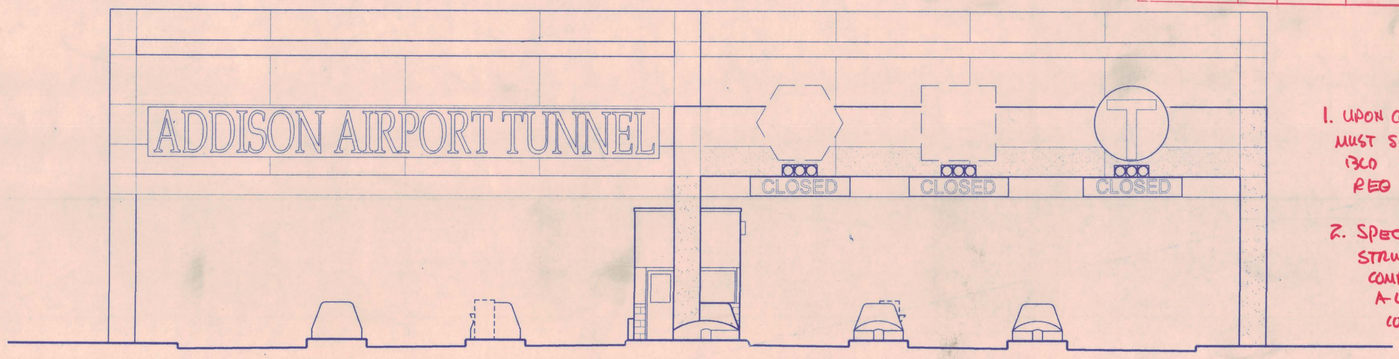

AT ANY LOCATION WITHIN THESE PLANS AND THE ACCOMPANYING SPECIFICATIONS, PROPOSALS, AND CONTRACT WHERE THE WORDS "TEXAS TURNPIKE AUTHORITY" APPEAR, THESE WORDS SHALL, BY DEFINITION, MEAN THE "NORTH TEXAS TOLLWAY AUTHORITY", A BODY POLITIC AND CORPORATE AND A POLITICAL SUBDIVISION OF THE STATE OF TEXAS.

RECOMMENDED BY:
GINN CORPORATION
H. Wayne [illegible] P.E.
DATE: 12/18/97

DEPARTMENTAL REVIEW	HOLD	APPROVED	REVIEWED BY
FIRE		5-5-98	[illegible] Robbins
ENGINEERING			
UTILITIES			
STREETS			
LANDSCAPE			

OK PER JEFF
RC 5-6-98

INSPECTION REVIEW	HOLD	APPROVED	REVIEWED BY
BUILDING		5-5-98	RC
PLUMBING		5-5-98	L.F.
ELECTRICAL		5-5-98	RC
MECHANICAL		5-5-98	RC
ZONING			
HEALTH			

see Notes p. 30

RECOMMENDED BY:
NORTH TEXAS TOLLWAY AUTHORITY
James W. Griffin
CHIEF ENGINEER
DATE: December 19, 1997

1. UPON COMPLETION OF BLD. THE ARCHITECT MUST SUBMIT A LETTER STATING THAT BLD AND SITE MEET HANDICAP REQ OF CH 31 1991 UBC.

2. SPECIAL INSPECTOR REQD FOR ALL STRUCTURAL ELEMENTS. - AND UPON COMPLETION AN ENGINEER MUST SUBMIT A LETTER STATING BLD WAS CONSTRUCTED PER PLAN.

APPROVED BY:
NORTH TEXAS TOLLWAY AUTHORITY
[illegible]
EXECUTIVE DIRECTOR
DATE: 12/19/97

PREPARED BY:
CHIANG, PATEL & YERBY
CIVIL ENGINEER
DATE: 12/11/97
STATE OF TEXAS — THAKOR J. SHETH 61192 — REGISTERED PROFESSIONAL ENGINEER

PREPARED AND REVIEWED BY:
AGUIRREcorporation
PRINCIPAL-IN-CHARGE
DATE: 12.16.97
REGISTERED ARCHITECT — PEDRO AGUIRRE 2390-3 — STATE OF TEXAS

PREPARED AND REVIEWED BY:
AGUIRREcorporation
PROJECT MANAGER
DATE: 12/18/97
STATE OF TEXAS — FROST E. GARDNER 29910 — REGISTERED PROFESSIONAL ENGINEER

PREPARED BY:
AGUIRREcorporation
REGISTERED ARCHITECT
DATE: 12/18/97
REGISTERED ARCHITECT — STEPHEN OWEN HALL 2815 — STATE OF TEXAS

PREPARED BY:
AGUIRREcorporation
STRUCTURAL ENGINEER
DATE: 12/16/97
STATE OF TEXAS — STEVEN H. JOHNSTON 80631 — REGISTERED PROFESSIONAL ENGINEER

PREPARED BY:
AGUIRREcorporation
MECHANICAL ENGINEER
DATE: 12.16.97
STATE OF TEXAS — STEPHEN P. LEARY 60987 — REGISTERED PROFESSIONAL ENGINEER

PREPARED BY:
AGUIRREcorporation
ELECTRICAL ENGINEER
DATE: 12.16.97
STATE OF TEXAS — RICHARD LAWRENCE DICKSON 69306 — REGISTERED PROFESSIONAL ENGINEER

H:\aai-proj\9603-01\DWG\ADDISON\TAAT_G01.dwg
Thu Dec 11 11:20:37 1997

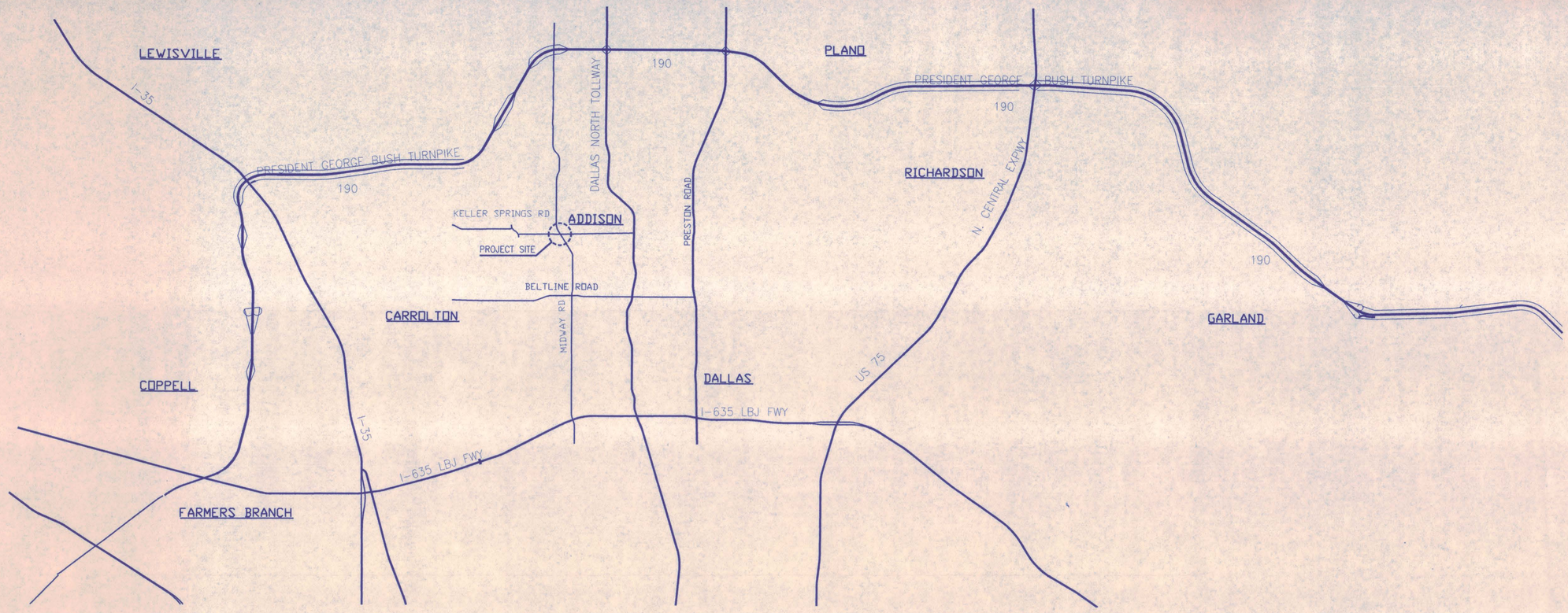

1 LOCATION MAP
SCALE AS SHOWN
190_MP.DWG

PLAN NORTH

0 1 2 3 4 5 MILES

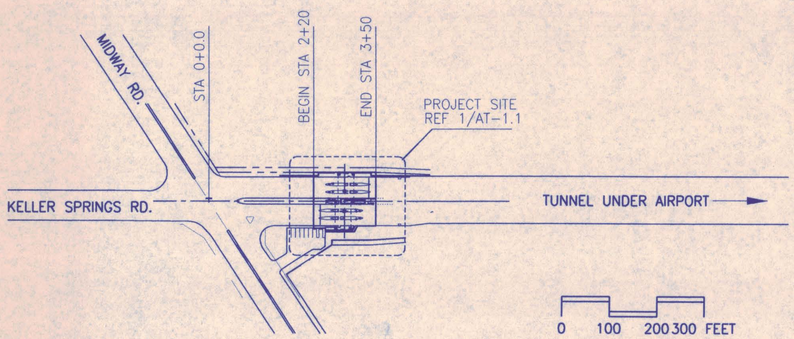

2 SEGMENT / PHASE
SCALE AS SHOWN
TAATAPS1.DWG

PLAN NORTH

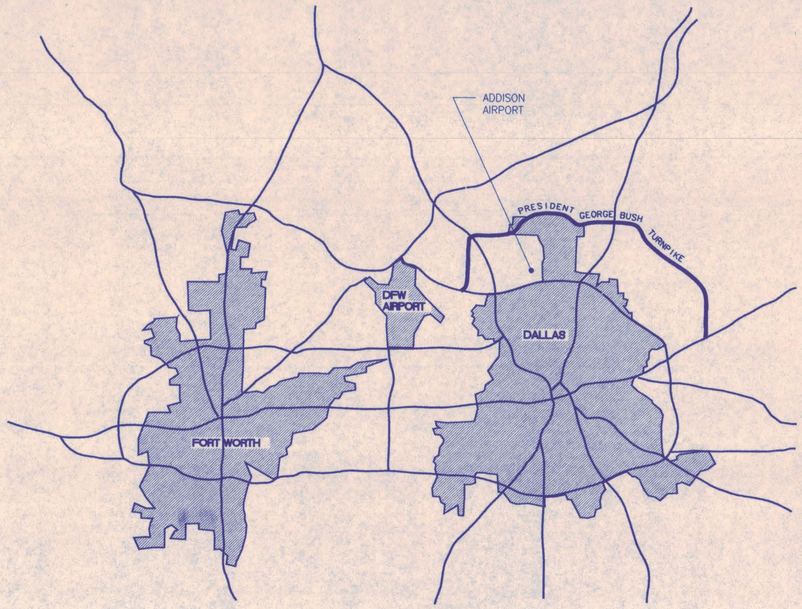

3 AREA MAP
NO SCALE
DFW.DWG

PLAN NORTH

AT-G0.3

GENERAL NOTES

1. SCALES ARE APPROXIMATE. MAPS ARE SHOWN FOR GENERAL INFORMATION AND ARE NOT INTENDED TO PROVIDE EXACT DISTANCES.
2. ROADWAY ON ADJACENT SIDES OF PLAZA AND TUNNEL WORK ARE BY OTHER CONTRACTORS. WORK MAY OR MAY NOT BE COMPLETED WHEN TOOL PLAZA CONTRACTOR BEGINS ADDISON AIRPORT TUNNEL TOLL PLAZA
3. TOLL PLAZA CONTRACTOR SHALL COORDINATE WITH ROADWAY CONTRACTOR TO PROVIDE BETWEEN ROADWAY AND PLAZA A SMOOTH TRANSITION AT INTERFACE.

REGISTERED ARCHITECT STEPHEN OWEN HALL 2815 STATE OF TEXAS

NO.	REVISION	BY	DATE

NORTH TEXAS TOLLWAY AUTHORITY

ADDISON AIRPORT TUNNEL BARRIER TOLL PLAZA

LOCATION MAPS

AGUIRRE corporation
12700 PARK CENTRAL DRIVE
15 TH FLOOR
DALLAS TEXAS 75251
TEL. (972) 788-1508

SECTION XIII

CHECKED DATE 12/18/97 DESIGNED MM DATE 8/15/96
CHECKED DATE 12/18/97 SCALE NO SCALE
CONTRACT NO. DNT-290 SHEET 3 OF 53

H:\oai-proj\9603-01\DWG\ADDISON\TAAT_G03.dwg
Wed Dec 10 13:49:40 1997

ABBREVIATION LEGEND

@	AT
AB	ANCHOR BOLT
ABV	ABOVE
AC	ACOUSTICAL
A/C	AIR CONDITIONER (ING)
ACC	ACCESS
ACFL	ACCESS FLOOR
ACPL	ACOUSTICAL PLASTER
ACT	ACOUSTICAL TILE
ADA	AM. DIS. ACT
ADD	ADDENDUM
ADDNL	ADDITIONAL
ADJ	ADJACENT
ADJT	ADJUSTABLE
AFF	ABOVE FINISH FLOOR
AGG	AGGREGATE
AHU	AIR HANDLING UNIT
AL	ALUMINUM
ALT	ALTERNATE
ANC	ANCHOR
ANOD	ANODIZED
AP	ACCESS PANEL-APNL
AP	AERIAL PRIMARY
APX	APPROXIMATE
ARCH	ARCHITECT
ASB	ASBESTOS
ASPH	ASPHALT
AUTO	AUTOMATIC
BD	BOARD
BEL	BELOW
BET	BETWEEN
BF	BELOW FLOOR
BFC	BELOW FIN CLG
BG	BELOW GRADE
BIT	BITUMINOUS
BJT	BED JOINT
BLDG	BUILDING
BLK	BLOCK
BLKG	BLOCKING
BM	BENCH MARK
BOP	BOT OF PIPE
BOT	BOTTOM
BPL	BEARING PLATE
BPL	BASE PLATE
BRG	BEARING
BRZ	BRONZE
BS	BOTH SIDES
BSMT	BASEMENT
BUR	BUILT-UP ROOF
BVL	BEVELLED
BW	BETWEEN
CAB	CABINET
CEM	CEMENT
CFMF	COLD FORMED METAL FRAMING
CFT	CUBIC FOOT (FEET)
CG	CORNER GUARD
CI	CAST IRON
CIP	CAST IN PLACE
CJT	CONTROL JOINT
CL	CENTER LINE
CLG	CEILING
CLR	CLEAR (ANCE)
CMU	CONCRETE MASONRY UNIT
COL	COLUMN
COMP	COMPRESS (ED)
CONC	CONCRETE
CONN	CONNECT (ION)
CONT	CONTINUOUS
CONST	CONSTRUCTION
CONTR	CONTRACTOR
CRC	CIRCUMFERENCE
CSMT	CASEMENT
CT	CERAMIC TILE
CTR	CENTER (ED)
CYD	CUBIC YARD (S)
D	DRAIN
DEMO	DEMOLITION
DF	DRINKING FOUNTAIN
DIA	DIAMETER
DIAG	DIAGONAL
DIM	DIMENSION
DISP	DISPENSER
DIV	DIVISION
DN	DOWN
DNA	DOES NOT APPLY
DR	DOOR
DS	DOWNSPOUT
DTL	DETAIL
DWG	DRAWING

E	EAST
EA	EACH
EL	ELEVATION
ELEC	ELECTRIC(AL)
ELEV	ELEVATOR
EMER	EMERGENCY
EQ	EQUAL
EQP	EQUIPMENT
ESC	ESCALATOR
EST	ESTIMATE (ED)
EXIST	EXISTING
EXH	EXHAUST
EXP	EXPANSION
EXT	EXTERIOR
EWC	ELECTRICAL WATER COOLER
FA	FIRE ALARM
FAS	FASTEN (ER)
FB	FACE OF BRICK
FD	FLOOR DRAIN
FE	FIRE EXTINGUISHER
FEC	FIRE EXTINGUISHER CABINET
FF	FINISH FLOOR LINE/ELEVATION
FH	FIRE HYDRANT
FHS	FIRE HOSE STATION
FIN	FINISH
FIXT	FIXTURE
FLR	FLOOR (ING)
FOF	FACE OF FINISH
FOS	FACE OF STUD
FP	FIRE PROOF
FRP	FIBERGLASS REINFORCED PANEL
FT	FOOT (FEET)
FTG	FOOTING
FUR	FURR (ED) (ING)
FUT	FUTURE
FV	FIELD VERIFY
GA	GAUGE
GC	GENERAL CONTRACTOR
GD	GRADING
GI	GALVANIZED IRON
GL	GLASS,GLAZING
GOVT	GOVERNMENT
GP	GALVANIZED PIPE
GV	GALVANIZED
GYP	GYPSUM
HB	HOSE BIBB
HC	HOLLOW CORE
HD	HAND
HD	HEAD
HD	HEAVY DUTY
HDW	HARDWARE
HDWD	HARDWOOD
HM	HOLLOW METAL
HOR	HORIZONTAL
HP	HORSE POWER
HT	HEIGHT
HTG	HEATING
HVAC	HEATING/VENTILATING/ A/C
HWR	WATER HEATER
ID	INSIDE DIAMETER
INCL	INCLUDE(D)(ING)
INSUL	INSULATION
INT	INTERIOR
INTM	INTERMEDIATE
INV	INVERT
IPS	IRON PIPE SIZE
J	JOIST
JB	JUNCTION BOX
JC	JANITOR'S CLOSET
JF	JOINT FILLER
JT	JOINT
KIT	KITCHEN
KO	KNOCK OUT
KPL	KICK PLATE
L	LENGTH
LAB	LABORATORY
LAD	LADDER
LAM	LAMINATE (ED)
LAV	LAVORATORY
LG	LONG
LH	LEFT HAND
LPT	LOW POINT
LT	LIGHT
LTL	LINTEL
LW	LIGHTWEIGHT
LWC	LIGHTWEIGHT CONCRETE
LVR	LOUVER

M	METER
MAS	MASONRY
MATL	MATERIAL
MAX	MAXIMUM
MBR	MEMBER
MECH	MECHANICAL
MED	MEDIUM
MET	METAL
MFD	METAL FLOOR DECKING
MFR	MANUFACTURE(ER)
MH	MAN HOLE
MIN	MINIMUM
MIR	MIRROR
MISC	MISCELLANEOUS
MM	MILLIMETER
MRD	METAL ROOF DECKING
MT	MOUNT(ED)
N	NORTH
NA	NOT APPLICABLE
NFP	X
NIC	NOT IN CONTRACT
NOM	NOMINAL
NTS	NOT TO SCALE
OA	OVERALL
OC	ON CENTER(S)
OD	OUTSIDE DIAMETER
OFD	OVERFLOW DRAIN
OHD	OVERHEAD
OPG	OPENING
OPP	OPPOSITE
OPP HD	OPPOSITE HAND
PAR	PARALLEL
PB	PANIC BAR
PBD	PARTICLE BOARD
PED	PEDESTAL
PERF	PERFORATE(D)
PFB	PREFABRICATE(D)
PFN	PREFINISHED
PG	PLATE GLASS
PHM	PAINTED HOLLOW METAL
PK	PARKING
PKG	PACKAGE(ING)
PL	PLATE
PL	PROPERTY LINE
PLAS	PLASTIC
PLAM	PLASTIC LAMINATE
PLF	POUNDS PER LINEAR FOOT
PTD	PAPER TOWEL DISPENSER
PTR	PAPER TOWEL RECEPTACLE
PNL	PANEL
PNT	PAINT / PAINTED
PRF	PREFORMED
PSF	POUNDS PER SQ FOOT
PSI	POUNDS PER SQ INCH
PT	POINT
PTN	PARTITION
PV	PAVE(D)(ING)
PVC	POLYVINYL CHLORIDE
PVMT	PAVEMENT
PWD	PLYWOOD
R	RISER
RA	RETURN AIR
RAD	RADIUS
RB	RUBBER BASE
RCP	REFLECTED CEILING PLAN
REF	REFERENCE
REINF	REINFORCING(MENT)
RET	RETURN
REV	REVISION
RFL	REFLECT
RH	RIGHT HAND
RM	ROOM
RO	ROUGH OPENING
ROW	RIGHT OF WAY
RQD	REQUIRED
RTU	ROOF TOP UNIT
S	SOUTH
SC	SOLID CORE
SCH	SCHEDULE(D)
SD	STORM DRAIN
SEC	SECTION
SHT	SHEET
SIM	SIMILAR
SPEC	SPECIFICATION(IED)
SQ	SQUARE
SQFT	SQUARE FOOT (FOOT)

SS	STAINLESS STEEL
STA	STATION
STD	STANDARD
STL	STEEL
STOR	STORAGE
STR	STRUCTURAL
SUS	SUSPENDED
SVF	SHEET VINYL FLOORING
SYM	SYMETRICAL
SYS	SYSTEM
T/	TOP OF
TEL	TELEPHONE
THK	THICK
THR	THRESHOLD
TOL	TOLERANCE
TPD	TOILET PAPER DISP
TYP	TYPICAL
UNO	UNLESS NOTED OTHERWISE
VB	VAPOR BARRIER
VCT	VINYL COMPOSITION TILE
VERT	VERTICAL
VIN	VINYL
VNR	VENEER
VTR	VENT THRU ROOF
VWC	VINYL WALLCOVERING
WC	WATER CLOSET
WD	WOOD
WH	WALL HUNG
WIN	WINDOW
WM	WIRE MESH
W/O	WITH OUT
WP	WATERPROOF / WATERPROOFING
WPT	WORKING POINT
WSCT	WAINSCOT
WWF	WELDED WIRE FABRIC
	WEST

ARCHITECTURAL SYMBOLS

- PLASTER, GROUT
- INSULATION (BATTEN)
- INSULATION (RIGID)
- BRICK
- CMU
- SOLID POLYMER
- EARTH
- ℄ — CENTER LINE
- HIDDEN LINE
- BREAK LINE
- WORK TO BE REMOVED, FUTURE WORK WORK ABOVE, WORK BELOW OR WORK BEYOND ALL AS NOTED
- LEVEL LINE, FLOOR LEVEL OR ELEVATION
- COLUMN LINE
- L or ∡ — ANGLE
- FASTENERS IN ELEVATION
- PLAN NORTH — PLAN NORTH TRUE NORTH AS NOTED
- 1 REVISION NUMBER — REVISIONS
- 10/A-3 — ELEVATION MARK
- 10/A-3 — WALL & BUILDING SECTIONS
- 10/A3.7 — AREA DETAIL REFERENCE
- OFFICE 121 — ROOM NAME & NUMBER
- A / 121 — PARTITION TYPE
- DOOR NUMBER

CODE SUMMARY

APPLICABLE CODES

1991 UNIFORM BUILDING CODE
1991 UNIFORM MECHANICAL CODE
1991 UNIFORM MECHANICAL CODE W/ AMENDMENTS
1990 NATIONAL ELECTRICAL CODE W/ AMENDMENTS
1991 NATIONAL FIRE CODE

OCCUPANCY CLASSIFICATION

CANOPY – GROUP B, DIVISION I
BOOTH– GROUP B, DIVISION I

CONSTRUCTION TYPE

CANOPY– TYPE II N
BOOTH– TYPE II N

ALLOWABLE FLOOR AREA

ALLOWABLE FLOOR AREA– 12,000 S.F. UBC TABLE 5-C

ACTUAL CANOPY AREA– 3,860 S.F.
ACTUAL BOOTH AREA– 408 S.F.

MAXIMUM ALLOWABLE HEIGHT UBC TABLE 5-D

ALLOWABLE STORIES/ HEIGHT– 2 STORIES / 55 FT.

ACTUAL CANOPY HEIGHT– 1 STORY / 33.5 FT.
ACTUAL BOOTH HEIGHT– 1 STORY / 13.4 FT.

CONSTRUCTION REQUIREMENTS– FIRE RESISTIVE REQUIREMENTS

STRUCTURAL FRAME——— N UBC TABLE 17-A
INTERIOR/ EXTERIOR BEARING WALLS– N
EXTERIOR/ NON-BEARING WALLS– — N
EXTERIOR DOORS AND WINDOWS——— N
PERMANENT PARTITIONS——— N
SHAFT ENCLOSURES——— N
ROOF/ CEILING– ——— N

SHEET NUMBERING KEY

NN-X0.1

SITE DESIGNATION (SEE BELOW)

SEQUENTIAL NUMBER

DISCIPLINE:

R – RAMP PLAZA (A THROUGH P)
B – BARRIER PLAZA (#6 THROUGH #9)
OP– OPERATIONS BLDG.
AT– ADDISON TUNNEL

A – ARCHITECTURAL
C – CIVIL
E – ELECTRICAL
M – MECHANICAL
P – PLUMBING
S – STRUCTURAL
G – GENERAL INFORMATION

AT-G0.2

GENERAL NOTES

1.– CONTRACTOR SHALL VERIFY ALL EXISTING CONDITIONS AND INFORM THE ARCHITECT OF ANY DISCREPANCIES BETWEEN THESE AND THE CONTRACT DOCUMENTS.

2.– COORDINATE ALL WORK WITH CIVIL, STRUCTURAL, MECHANICAL, PLUMBING, ELECTRICAL, AND SECURITY DRAWINGS.

3.– COORDINATE ALL WORK AT LIMITS OF CONSTRUCTION WITH CONTRACTOR FOR ADJACENT WORK IN ORDER TO FACILITATE CONTINUATION OF FINISHES, MATERIAL AND APPROPRIATE CONNECTIONS.

4.– FINISH FLOOR OF BOOTH AT 634.33 FEET ABOVE MEAN SEA LEVEL EQUALS ARCHITECTURAL ELEVATION +100'-0".

5.– DIMENSIONS SHOWN ON DRAWINGS OVERRIDE GRAPHIC REPRESENTATIONS THERE ON. ANY SIGNIFICANT DISCREPANCIES FOUND WHICH ARE NOT INDICATED AS "NOT TO SCALE" ON THE DRAWINGS SHALL BE BROUGHT TO THE ATTENTION OF THE ENGINEER PRIOR TO CUTTING, FABRICATIONS OF INSTALLATIONS OR ASSEMBLIES. DO NOT SCALE DRAWINGS TO OBTAIN DIMENSIONS.

PROVIDE BIRD PREVENTION SYSTEMS AT EACH END OF ALL PRECAST CONCRETE TEES; TO BE MOUNTED ON TOP OF THE SUPPORTING CONCRETE BEAMS

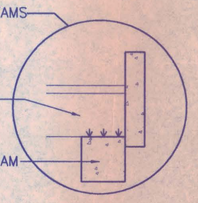

12/18/97

REGISTERED ARCHITECT STEPHEN OWEN HALL 2815 STATE OF TEXAS

NO.	REVISION	BY	DATE

NORTH TEXAS TOLLWAY AUTHORITY

ADDISON AIRPORT TUNNEL BARRIER TOLL PLAZA

ABBREVIATIONS, SYMBOLS, GENERAL NOTES AND CODE SUMMARY

AGUIRRE Corporation
12700 PARK CENTRAL DRIVE
16 TH FLOOR
DALLAS TEXAS 75251
TEL (972) 788-1008

SECTION XIII

CHECKED DM DATE 12/18/97 DESIGNED MM DATE 8/15/96
CHECKED SG DATE 12/18/97 SCALE N/A
CONTRACT NO. DNT-290 SHEET 2 OF 53

H:\aai-proj\9603-01\DWG\ADDISON\taat_g02.dwg
Wed Dec 10 13:52:25 1997

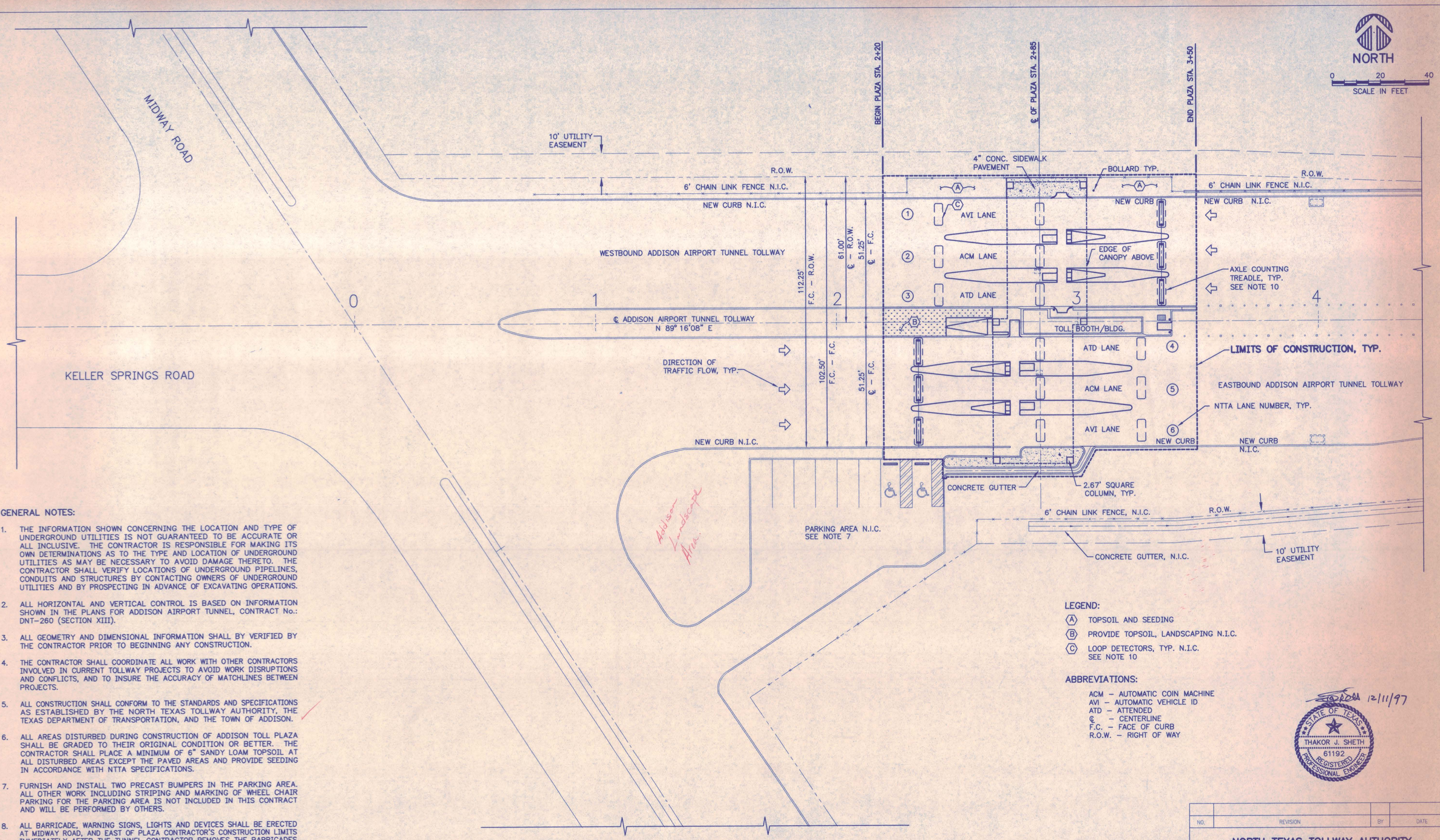

GENERAL NOTES:

1. THE INFORMATION SHOWN CONCERNING THE LOCATION AND TYPE OF UNDERGROUND UTILITIES IS NOT GUARANTEED TO BE ACCURATE OR ALL INCLUSIVE. THE CONTRACTOR IS RESPONSIBLE FOR MAKING ITS OWN DETERMINATIONS AS TO THE TYPE AND LOCATION OF UNDERGROUND UTILITIES AS MAY BE NECESSARY TO AVOID DAMAGE THERETO. THE CONTRACTOR SHALL VERIFY LOCATIONS OF UNDERGROUND PIPELINES, CONDUITS AND STRUCTURES BY CONTACTING OWNERS OF UNDERGROUND UTILITIES AND BY PROSPECTING IN ADVANCE OF EXCAVATING OPERATIONS.

2. ALL HORIZONTAL AND VERTICAL CONTROL IS BASED ON INFORMATION SHOWN IN THE PLANS FOR ADDISON AIRPORT TUNNEL, CONTRACT No.: DNT-260 (SECTION XIII).

3. ALL GEOMETRY AND DIMENSIONAL INFORMATION SHALL BY VERIFIED BY THE CONTRACTOR PRIOR TO BEGINNING ANY CONSTRUCTION.

4. THE CONTRACTOR SHALL COORDINATE ALL WORK WITH OTHER CONTRACTORS INVOLVED IN CURRENT TOLLWAY PROJECTS TO AVOID WORK DISRUPTIONS AND CONFLICTS, AND TO INSURE THE ACCURACY OF MATCHLINES BETWEEN PROJECTS.

5. ALL CONSTRUCTION SHALL CONFORM TO THE STANDARDS AND SPECIFICATIONS AS ESTABLISHED BY THE NORTH TEXAS TOLLWAY AUTHORITY, THE TEXAS DEPARTMENT OF TRANSPORTATION, AND THE TOWN OF ADDISON.

6. ALL AREAS DISTURBED DURING CONSTRUCTION OF ADDISON TOLL PLAZA SHALL BE GRADED TO THEIR ORIGINAL CONDITION OR BETTER. THE CONTRACTOR SHALL PLACE A MINIMUM OF 6" SANDY LOAM TOPSOIL AT ALL DISTURBED AREAS EXCEPT THE PAVED AREAS AND PROVIDE SEEDING IN ACCORDANCE WITH NTTA SPECIFICATIONS.

7. FURNISH AND INSTALL TWO PRECAST BUMPERS IN THE PARKING AREA. ALL OTHER WORK INCLUDING STRIPING AND MARKING OF WHEEL CHAIR PARKING FOR THE PARKING AREA IS NOT INCLUDED IN THIS CONTRACT AND WILL BE PERFORMED BY OTHERS.

8. ALL BARRICADE, WARNING SIGNS, LIGHTS AND DEVICES SHALL BE ERECTED AT MIDWAY ROAD, AND EAST OF PLAZA CONTRACTOR'S CONSTRUCTION LIMITS IMMEDIATELY AFTER THE TUNNEL CONTRACTOR REMOVES THE BARRICADES AT THESE LOCATIONS FOR THE GUIDANCE AND PROTECTION OF TRAFFIC AND PEDISTRIANS. THEY MUST CONFORM TO THE INSTALLATION SHOWN ON TMUTCD. THESE TRAFFIC CONTROL DEVICES SHALL BE MAINTAINED UNTIL THE ENTIRE TUNNEL PROJECT IS OPENED TO TRAFFIC.

9. A TEMPORARY POLLUTION PREVENTION AND CONTROL PLAN IS NOT REQUIRED BECAUSE OF THE NATURE OF THE CONSTRUCTION (SHORT DURATION AND SMALL DISTURBED AREA). HOWEVER, IF POLLUTION PREVENTION MEASURES ARE DETERMINED TO BE REQUIRED DURING THE CONSTRUCTION, THEN THE CONTRACTOR SHALL FURNISH ALL MATERIALS, LABOR AND EQUIPMENT FOR INSTALLATION, MAINTENANCE AND REMOVAL OF ALL MEASURES REQUIRED BY THE ENGINEER. THIS WORK WILL BE COMPENSATED AS AN EXTRA WORK.

10. FURNISHING AND INSTALLATION OF LOOP DETECTORS ARE NOT INCLUDED IN THIS CONTRACT. TREADLE FRAME WILL BE FURNISHED BY THE AUTHORITY. INSTALLATION OF TREADLE FRAME IS INCLUDED IN THIS CONTRACT.

LEGEND:

- (A) TOPSOIL AND SEEDING
- (B) PROVIDE TOPSOIL, LANDSCAPING N.I.C.
- (C) LOOP DETECTORS, TYP. N.I.C. SEE NOTE 10

ABBREVIATIONS:

ACM – AUTOMATIC COIN MACHINE
AVI – AUTOMATIC VEHICLE ID
ATD – ATTENDED
℄ – CENTERLINE
F.C. – FACE OF CURB
R.O.W. – RIGHT OF WAY

12/11/97

STATE OF TEXAS
THAKOR J. SHETH
61192
REGISTERED PROFESSIONAL ENGINEER

BENCHMARK T-301

5/8"ø I.R. SET APPROXIMATELY 100' E. OF MIDWAY ROAD AND 250' S. OF KELLER SPRINGS AND MIDWAY ROAD INTERSECTION EL. 639.96

BENCHMARKS: TOWN OF ADDISON

1. "SQUARE" CUT IN SOUTHEAST TOP OF CURB OF PARKING LOT AT BUILDING #15950 ELEV. 637.75.

2. "SQUARE" CUT IN SOUTHWEST TOP OF CURB OF PARKING LOT AT 4125 KELLER SPRINGS ROAD. 60'± WEST OF MIDWAY PLACE SIGN. ELEV. 634.62.

Chiang, Patel & Yerby, Inc.
Consulting Engineers • Planners • Project Managers
Dallas • Fort Worth • Houston • San Antonio

AT-C1.1

NO.	REVISION	BY	DATE

NORTH TEXAS TOLLWAY AUTHORITY

ADDISON AIRPORT TUNNEL

SITE PLAN

AGUIRRE ASSOCIATES INC
12700 PARK CENTRAL DRIVE
15 TH FLOOR
DALLAS TEXAS 75251
TEL (972) 788-1508

SECTION XIII

DRAWN WAB	DATE 8/28/97	DESIGNED WAB	DATE 12/20/96
CHECKED TJS	DATE 11/5/97	SCALE 1"=20'-0"	

CONTRACT NO. DNT-290 SHEET 4 OF 53

13101.1M AT-C11.DWG

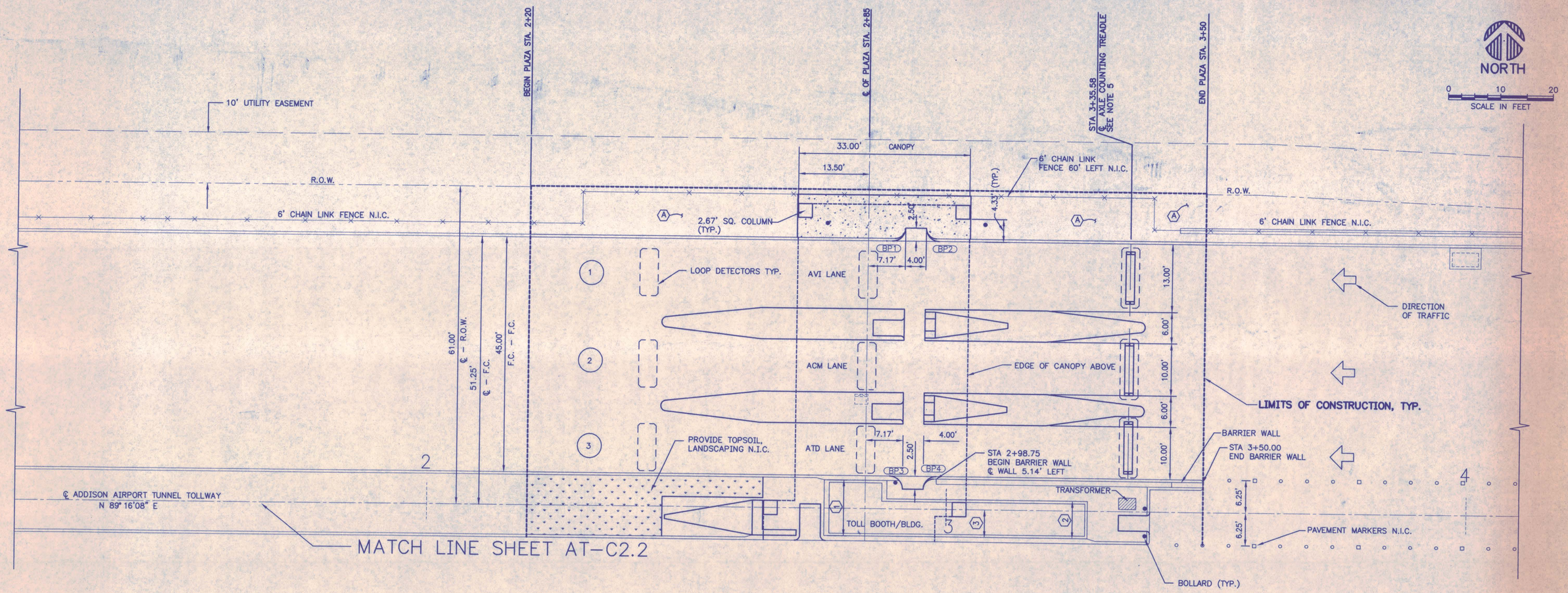

NOTES:

1. SEE GENERAL NOTES ON SHEET AT-C1.1.
2. PAVEMENT STRIPING FOR MAIN LANES IS NOT INCLUDED IN THIS CONTRACT.
3. FOR DIMENSIONAL INFORMATION ON THE ISLANDS IN MAIN PLAZA AREAS, SEE SHEETS AT-C7.1 AND AT-C7.2
4. FOR FURTHER INFORMATION ON THE TOLL BOOTH/BLDG. AND CANOPY STRUCTURES WITHIN THE MAIN PLAZA AREA, SEE ARCHITECTURAL SHEETS AT-A2.1 AND STRUCTURAL SHEETS AT-S1.1
5. VERIFY LOCATION OF AXLE COUNTING TREADLE WITH TTA PRIOR TO PAVEMENT CONSTRUCTION.
6. FOR LOCATION OF LOOP DETECTORS SEE SHEET AT-C5.1.

CURVE DATA TABLE

CURVE No.	DELTA	*RADIUS	TANGENT	LENGTH
BP1	90°00'00"	2.50'	2.50'	3.93'
BP2	90°00'00"	2.50'	2.50'	3.93'
BP3	90°00'00"	2.50'	2.50'	3.93'
BP4	90°00'00"	2.50'	2.50'	3.93'

* FACE OF THE CURB RADIUS IS SHOWN IN THE ABOVE TABLE.

BENCHMARKS: TOWN OF ADDISON

1. "SQUARE" CUT IN SOUTHEAST TOP OF CURB OF PARKING LOT AT BUILDING #15950 ELEV. 637.75.
2. "SQUARE" CUT IN SOUTHWEST TOP OF CURB OF PARKING LOT AT 4125 KELLER SPRINGS ROAD 60'± WEST OF MIDWAY PLACE SIGN. ELEV. 634.62.

BENCHMARK T-301

5/8"ø I.R. SET APPROXIMATELY 100' E. OF MIDWAY RD. AND 250' S. OF KELLER SPRINGS AND MIDWAY RD. INTERSECTION EL. 639.96

ABBREVIATIONS:

℄ – CENTERLINE
F.C. – FACE OF CURB
O.F. – OUTSIDE FACE

LEGEND:

1 10.67' O.F. – O.F.
2 7.17' O.F. – O.F.
3 5.33' O.F. – ℄
A 6" TOPSOIL AND SEEDING

Chiang, Patel & Yerby, Inc.
Consulting Engineers • Planners • Project Managers
Dallas • Fort Worth • Houston • San Antonio

AT-C2.1

12/11/97
STATE OF TEXAS
THAKOR J. SHETH
61192
REGISTERED PROFESSIONAL ENGINEER

NO.	REVISION	BY	DATE

NORTH TEXAS TOLLWAY AUTHORITY
ADDISON AIRPORT TUNNEL

DIMENSIONAL CONTROL
PLAN A

AGUIRRE ASSOCIATES INC
12700 PARK CENTRAL DRIVE
15 TH FLOOR
DALLAS TEXAS 75251
TEL (972) 788-1508

SECTION XIII

DRAWN WAB DATE 8/28/97 DESIGNED WAB DATE 12/20/97
CHECKED TJS DATE 11/5/97 SCALE 1"=10'-0"

CONTRACT NO. DNT-290 SHEET 5 OF 53

13121TM AT-C21.DWG

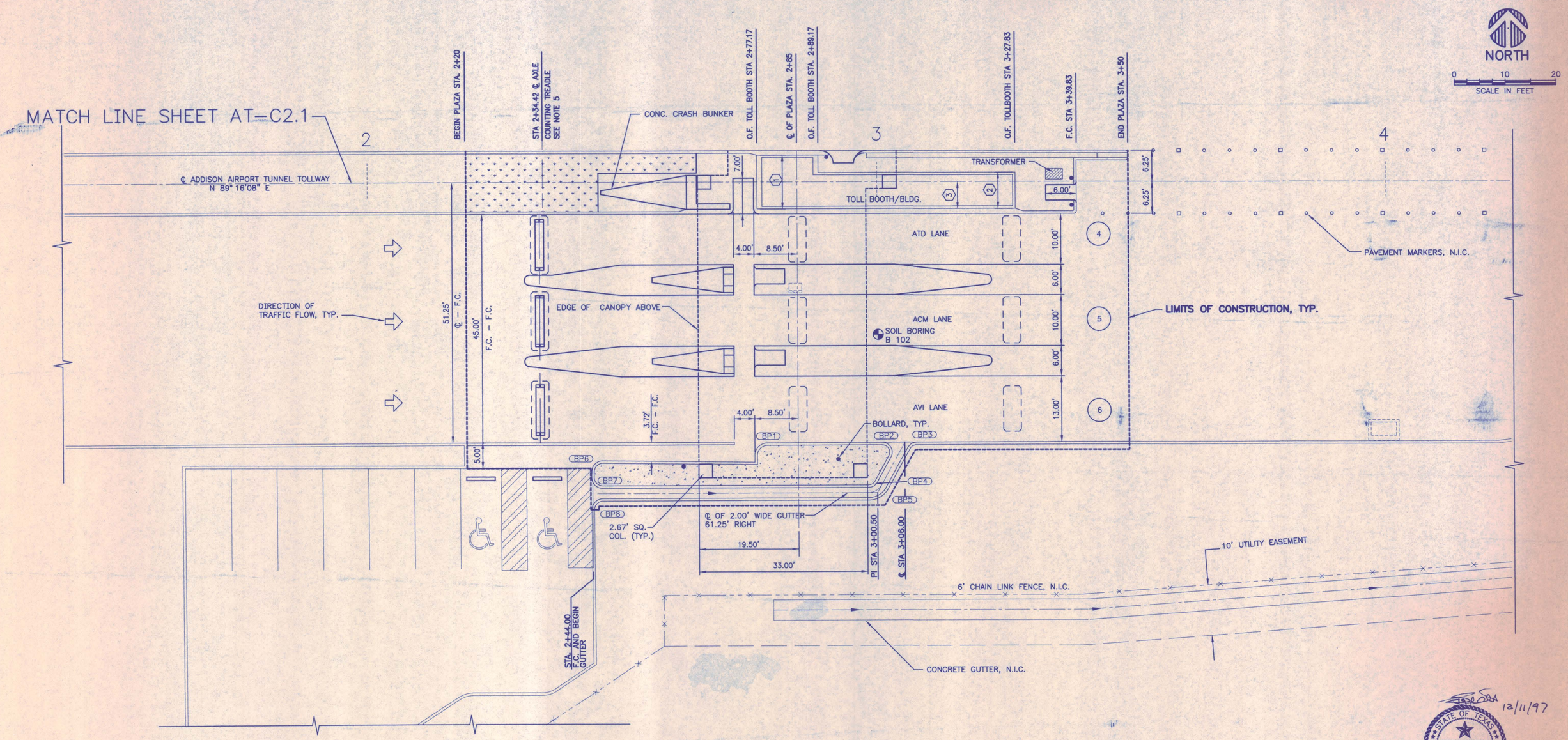

12/11/97

STATE OF TEXAS
THAKOR J. SHETH
61192
REGISTERED PROFESSIONAL ENGINEER

NOTES:

1. SEE GENERAL NOTES ON SHEET AT-C1.1.
2. PAVEMENT STRIPING FOR MAIN LANES IS NOT INCLUDED IN THIS CONTRACT.
3. FOR DIMENSIONAL INFORMATION ON THE ISLANDS IN MAIN PLAZA AREA, SEE SHEETS AT-C7.1, AND AT-C7.2
4. FOR FURTHER INFORMATION ON THE TOLL BOOTH/BLDG. AND CANOPY STRUCTURES WITHIN THE MAIN PLAZA AREA, SEE ARCHITECTURAL SHEETS AT-A2.1 AND STRUCTURAL SHEETS AT-S1.1.
5. VERIFY LOCATION OF AXLE COUNTING TREADLE WITH NTTA PRIOR TO PAVEMENT CONSTRUCTION.
6. FOR LOCATION OF LOOP DETECTORS SEE SHEET AT-C5.1.
7. REFER TO SHEET AT-C9.2 FOR DETAILS OF CONC. CRASH BUNKER.

LEGEND:

℄ - CENTERLINE

F.C. - FACE OF CURB

O.F. - OUTSIDE FACE

LEGEND:

(1) 10.67' O.F. - O.F.

(2) 7.17' O.F. - O.F.

(3) 5.33' ℄ - O.F.

CURVE DATA TABLE

CURVE No.	DELTA	*RADIUS	TANGENT	LENGTH
BP1	90°00'00"	2.50'	2.50'	3.93'
BP2	118° 48'39"	2.00'	3.38'	4.15'
BP3	61°11'21"	2.00'	1.18'	2.14'
BP4	61°11'21"	2.00'	1.18'	2.14'
BP5	61°11'21"	4.00'	2.37'	4.27'
BP6	90°00'00"	2.64'	2.64'	4.15'
BP7	90°00'00"	2.64'	2.64'	4.15'
BP8	90°00'00"	2.64'	2.64'	4.15'

* FACE OF THE CURB RADIUS IS SHOWN IN THE ABOVE TABLE.

BENCHMARKS: TOWN OF ADDISON

1. "SQUARE" CUT IN SOUTHEAST TOP OF CURB OF PARKING LOT AT BUILDING #15950 ELEV. 637.75.
2. "SQUARE" CUT IN SOUTHWEST TOP OF CURB OF PARKING LOT AT 4125 KELLER SPRINGS ROAD. 60± WEST OF MIDWAY PLACE SIGN. ELEV. 634.62.

BENCHMARK T-301

5/8"ø I.R. SET APPROXIMATELY 100' E. OF MIDWAY RD. AND 250' S. OF KELLER SPRINGS AND MIDWAY RD. INTERSECTION EL. 639.96

Chiang, Patel & Yerby, Inc.
Consulting Engineers • Planners • Project Managers
Dallas • Fort Worth • Houston • San Antonio

AT-C2.2

NO.	REVISION	BY	DATE

NORTH TEXAS TOLLWAY AUTHORITY
ADDISON AIRPORT TUNNEL

DIMENSIONAL CONTROL PLAN B

AGUIRRE ASSOCIATES INC
12700 PARK CENTRAL DRIVE
15 TH FLOOR
DALLAS TEXAS 75251
TEL (972) 788-1508

SECTION XIII

DRAWN WAB DATE 8/28/97 DESIGNED WAB DATE 12/20/96
CHECKED TJS DATE 11/5/97 SCALE 1"=10'-0"

CONTRACT NO. DNT-290 SHEET 6 OF 53

13131TM AT-C22.DWG

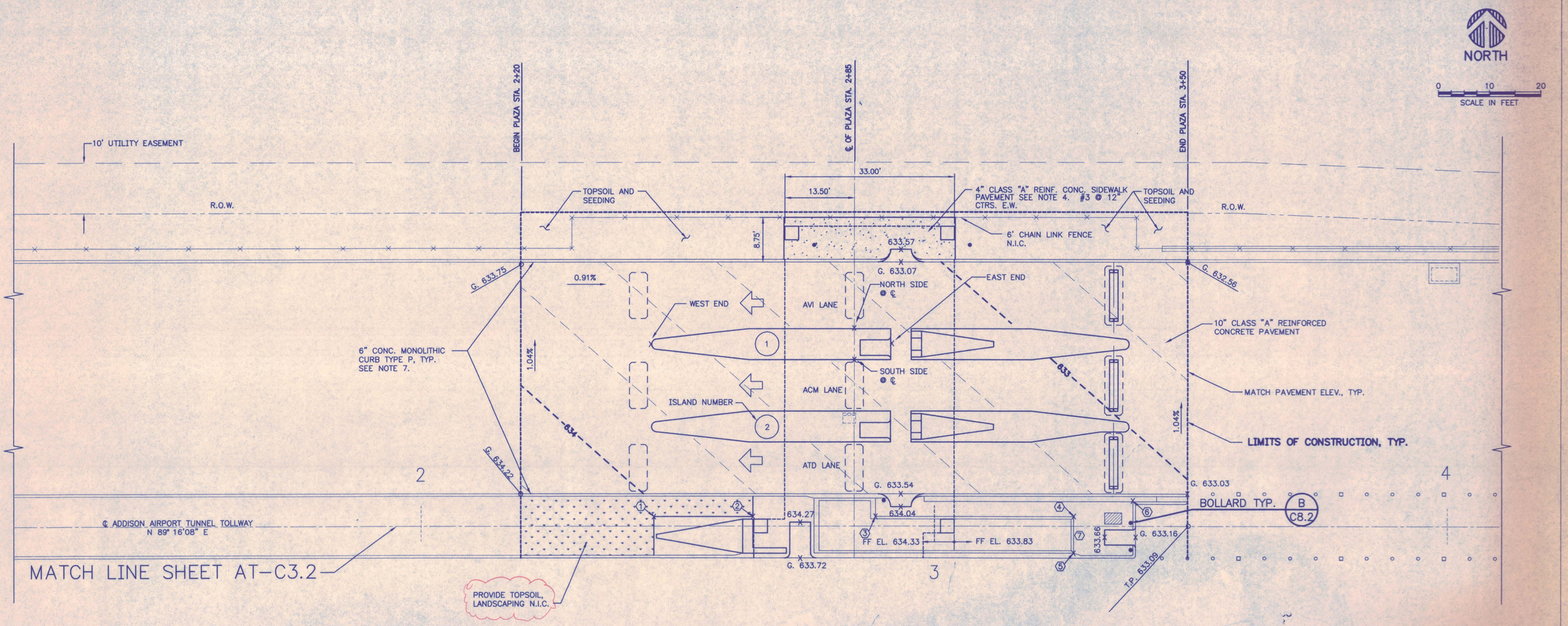

NOTES:

1. SEE GENERAL NOTES ON SHEET AT-C1.1.
2. SEE SHEET AT-C8.1 FOR PAVEMENT AND SIDEWALK JOINTS.
3. CONTOURS SHOWN REPRESENT TOP OF PAVEMENT ELEVATIONS.
4. ALL SIDEWALK PAVEMENT SHALL BE PLACED ON A MINIMUM OF 2" CONSOLIDATED SAND BASE.
5. THE ELEVATIONAL DATA FOR THE PROFILE GRADE LINE AS SHOWN ON THIS SHEET, WAS TAKEN FROM SHEET C26 OF DNT CONTRACT No. 260.
6. EXISTING GRADE AT THE MAIN LANE PAVING AREA IS APPROXIMATELY 12" BELOW THE TOP OF PAVEMENT ELEVATIONS SHOWN ON THIS DRAWING.
7. REFER TO SHEET AT-C8.1 FOR TYPE P CURB.
8. THE LIME TREATED SUBGRADE WITHIN AND ADJACENT TO THE TOLL PLAZA CONSTRUCTION LIMITS HAS PREVIOUSLY BEEN LIME TREATED AND STABILIZED BY OTHERS. IF THAT LIME STABILIZED SUBGRADE SUBSEQUENTLY IS DAMAGED BY THE CONTRACTOR'S CONSTRUCTION OPERATION, THE SUBGRADE SHALL BE REPAIRED WITH AVAILABLE STOCKPILE LIME TRIMMINGS OR WITH LIME SLURRY AS DIRECTED BY THE ENGINEER.

PAVEMENT ELEVATIONS

LOCATION	WEST END		N. SIDE @ ℄ PLAZA		S. SIDE @ ℄ PLAZA		EAST END	
	G	TC	G	TC	G	TC	G	TC
N. GUTTER	633.75	634.25	N/A	N/A	633.16	633.66	632.56	633.06
ISLAND 1	633.68	634.18	633.30	633.80	633.36	633.86	633.25	633.25
ISLAND 2	633.84	634.34	633.45	633.95	633.52	634.02	633.43	633.43
S. GUTTER	634.22	634.72	633.63	634.13	N/A	N/A	633.03	633.53

(SEE ISLAND 1 FOR TYPICAL SPOT ELEVATION LOCATIONS)

ABBREVIATIONS:

G – GUTTER
N – NORTH
S – SOUTH
TC– TOP OF CURB
TP – TOP OF PAVEMENT

LEGEND:

CHAIN LINK FENCE
MAIN CONTOURS (1' INTERVALS)
INTERMEDIATE CONTOURS (0.2' INTERVALS)
4" SIDEWALK PAVEMENT

1. TOP OF MEDIAN EL. 634.57
2. TOP OF MEDIAN EL. 634.40
3. TOP OF MEDIAN EL. 634.18
4. TOP OF MEDIAN EL. 633.81
5. TOP OF MEDIAN EL. 633.71
6. TOP OF CURB EL. 633.64
7. TOP OF MEDIAN EL. 633.79 @ DOOR

CURB TRANSITION

TYPE A CURB TO TYPE P CURB NORTH & SOUTH CURB. FROM STA. 2+20.00 TO STA. 2+22.50

TYPE P CURB TO TYPE A CURB NORTH CURB. FROM STA. 3+47.50 TO STA. 3+50.00

BENCHMARKS: TOWN OF ADDISON

1. "SQUARE" CUT IN SOUTHEAST TOP OF CURB OF PARKING LOT AT BUILDING #15950 ELEV. 637.75.
2. "SQUARE" CUT IN SOUTHWEST TOP OF CURB OF PARKING LOT AT 4125 KELLER SPRINGS ROAD. 60'± WEST OF MIDWAY PLACE SIGN. ELEV. 634.62.

BENCHMARK T-301
5/8"ø I.R. SET APPROXIMATELY 100' E. OR MIDWAY RD AND 250' S. OF KELLER SPRINGS AND MIDWAY RD INTERSECTION EL. 639.96

Chiang, Patel & Yerby, Inc.
Consulting Engineers • Planners • Project Managers
Dallas • Fort Worth • Houston • San Antonio

AT-C3.1

12/11/97
STATE OF TEXAS
THAKOR J. SHETH
61192
REGISTERED PROFESSIONAL ENGINEER

NO.	REVISION	BY	DATE

NORTH TEXAS TOLLWAY AUTHORITY
ADDISON AIRPORT TUNNEL

PAVING AND GRADING PLAN A

AGUIRRE ASSOCIATES INC
12700 PARK CENTRAL DRIVE
15 TH FLOOR
DALLAS TEXAS 75251
TEL (972) 788-1508

SECTION XIII

DRAWN WAB DATE 8/28/97 DESIGNED WAB DATE 12/20/96
CHECKED TJS DATE 11/5/97 SCALE 1"=10'-0"

CONTRACT NO. DNT-290 SHEET 7 OF 53

13141TM AT-C31.DWG

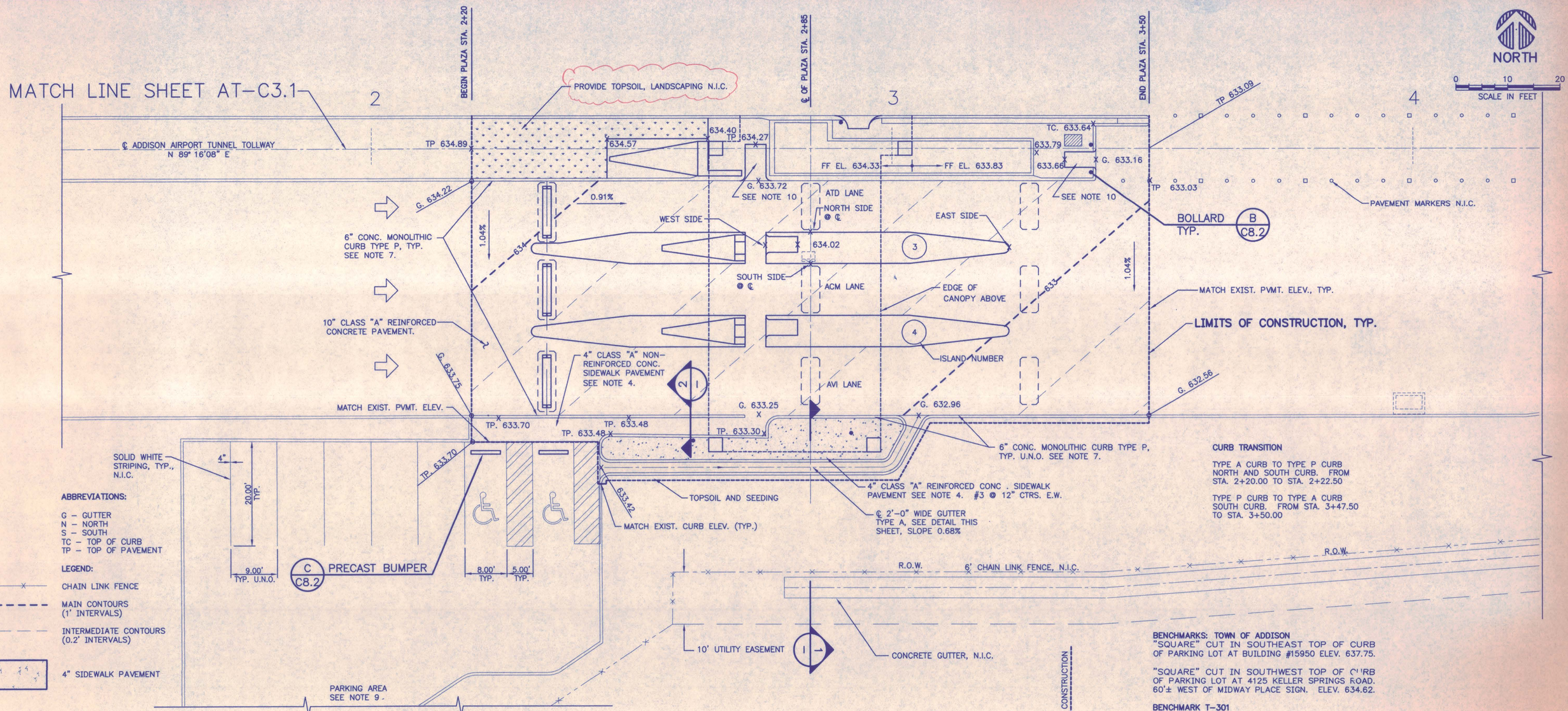

ABBREVIATIONS:

G – GUTTER
N – NORTH
S – SOUTH
TC – TOP OF CURB
TP – TOP OF PAVEMENT

LEGEND:

CHAIN LINK FENCE
MAIN CONTOURS (1' INTERVALS)
INTERMEDIATE CONTOURS (0.2' INTERVALS)
4" SIDEWALK PAVEMENT

CURB TRANSITION

TYPE A CURB TO TYPE P CURB NORTH AND SOUTH CURB. FROM STA. 2+20.00 TO STA. 2+22.50

TYPE P CURB TO TYPE A CURB SOUTH CURB. FROM STA. 3+47.50 TO STA. 3+50.00

BENCHMARKS: TOWN OF ADDISON

"SQUARE" CUT IN SOUTHEAST TOP OF CURB OF PARKING LOT AT BUILDING #15950 ELEV. 637.75.

"SQUARE" CUT IN SOUTHWEST TOP OF CURB OF PARKING LOT AT 4125 KELLER SPRINGS ROAD. 60'± WEST OF MIDWAY PLACE SIGN. ELEV. 634.62.

BENCHMARK T-301

5/8"ø I.R. SET APPROXIMATELY 100' E. OF MIDWAY RD AND 250' S. OF KELLER SPRINGS AND MIDWAY RD INTERSECTION EL. 639.96.

PAVEMENT ELEVATIONS								
LOCATION	WEST END		N. SIDE @ ℄ PLAZA		S. SIDE @ ℄ PLAZA		EAST END	
	G	TC	G	TC	G	TC	G	TC
N. GUTTER	634.22	634.72	N/A	N/A	633.63	634.13	633.03	N/A
ISLAND 3	633.56	633.56	633.53	634.03	633.47	633.97	633.14	633.64
ISLAND 4	633.40	633.40	633.36	633.86	633.30	633.80	632.97	633.47
S. GUTTER	633.75	634.25	633.16	633.66	N/A	N/A	632.56	633.06

(SEE ISLAND 3 FOR TYPICAL SPOT ELEVATION LOCATIONS)

NOTES:

1. SEE GENERAL NOTES ON SHEET AT-C1.1.
2. SEE SHEET AT-C8.1 FOR PAVEMENT AND SIDEWALK JOINTS.
3. CONTOURS SHOWN REPRESENT TOP OF PAVEMENT ELEVATIONS.
4. ALL SIDEWALK PAVEMENT SHALL BE PLACED ON A MINIMUM OF 2" CONSOLIDATED SAND BASE.
5. THE ELEVATIONAL DATA FOR THE PROFILE GRADE LINE AS SHOWN ON THIS SHEET, WAS TAKEN FROM SHEET C26 OF DNT CONTRACT NO. 260.
6. EXISTING GRADE AT THE MAIN LANE PAVING AREA IS APPROXIMATELY 12" BELOW THE TOP OF PAVEMENT ELEVATIONS SHOWN ON THIS DRAWING.
7. REFER TO SHEET AT-C8.1 FOR TYPE "P" CURB.
8. THE LIME TREATED SUBGRADE WITHIN AND ADJACENT TO THE TOLL PLAZA CONSTRUCTION LIMITS HAS PREVIOUSLY BEEN LIME TREATED AND STABILIZED BY OTHERS. IF THAT LIME STABILIZED SUBGRADE SUBSEQUENTLY IS DAMAGED BY THE CONTRACTOR'S CONSTRUCTION OPERATIONS, THE SUBGRADE SHALL BE REPAIRED WITH AVAILABLE STOCKPILED LIME TRIMMINGS OR WITH LIME SLURRY AS DIRECTED BY THE ENGINEER.
9. FURNISH AND INSTALL PRECAST BUMPERS IN THE PARKING AREA AS SHOWN IN THIS DRAWING. SIGNAGE, STRIPING AND WHEEL CHAIR SMYBOLS ARE NOT INCLUDED IN THIS CONTRACT.
10. ALL ACCESS RAMPS EXCEPT RAMP AT THE NORTH CANOPY COLUMN AND NORTH OF THE TOLL BOOTH SHALL BE CONSTRUCTED IN ACCORDANCE WITH ADA ACCESSIBILITY GUIDELINES FOR BUILDINGS AND FACILITIES. RAMP SURFACE AREA SHALL BE COVERED WITH A DETECTABLE WARNINGS AS DESCRIBED IN THESE STANDARDS.

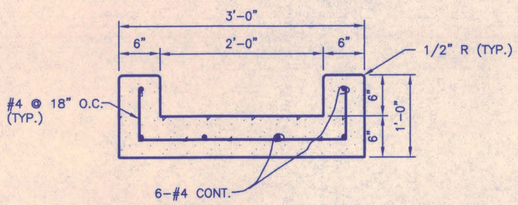

CONCRETE GUTTER (TY A) (2'-0")

SCALE: 1"=1'-0"

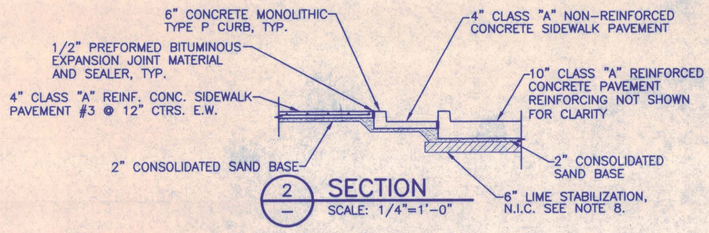

2 — SECTION
SCALE: 1/4"=1'-0"

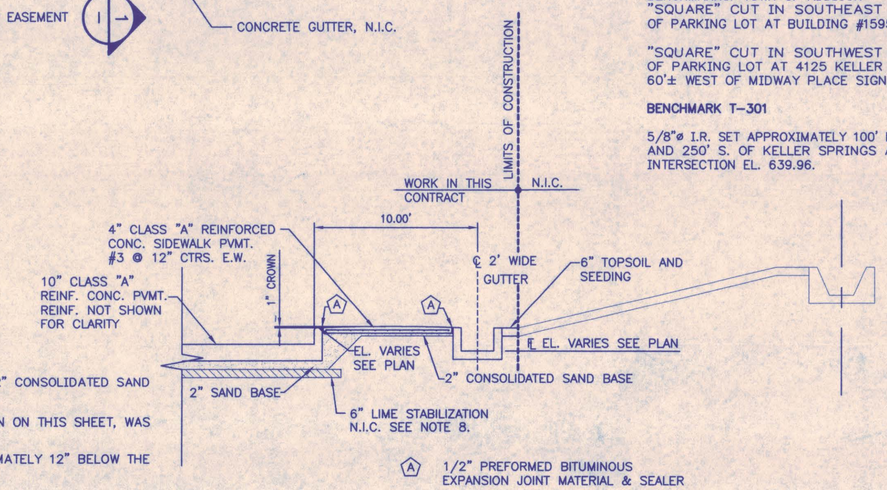

1 — SECTION
SCALE: 1"=5'-0"

Chiang, Patel & Yerby, Inc.
Consulting Engineers • Planners • Project Managers
Dallas • Fort Worth • Houston • San Antonio

STATE OF TEXAS
THAKOR J. SHETH
61192
REGISTERED PROFESSIONAL ENGINEER
12/11/97

NO.	REVISION	BY	DA

NORTH TEXAS TOLLWAY AUTHORITY
ADDISON AIRPORT TUNNEL

PAVING AND GRADING PLAN B

AGUIRRE ASSOCIATES INC
12700 PARK CENTRAL DRIVE
15 TH FLOOR
DALLAS TEXAS 75251
TEL (972) 788-1508

SECTION

DRAWN WAB DATE 8/28/97 DESIGNED WAB DATE 12
CHECKED TJS DATE 11/5/97 SCALE 1"=10'-0"

CONTRACT NO. DNT-290 SHEET 8 OF

AT-C3.2

131511M AT-C32.DWG

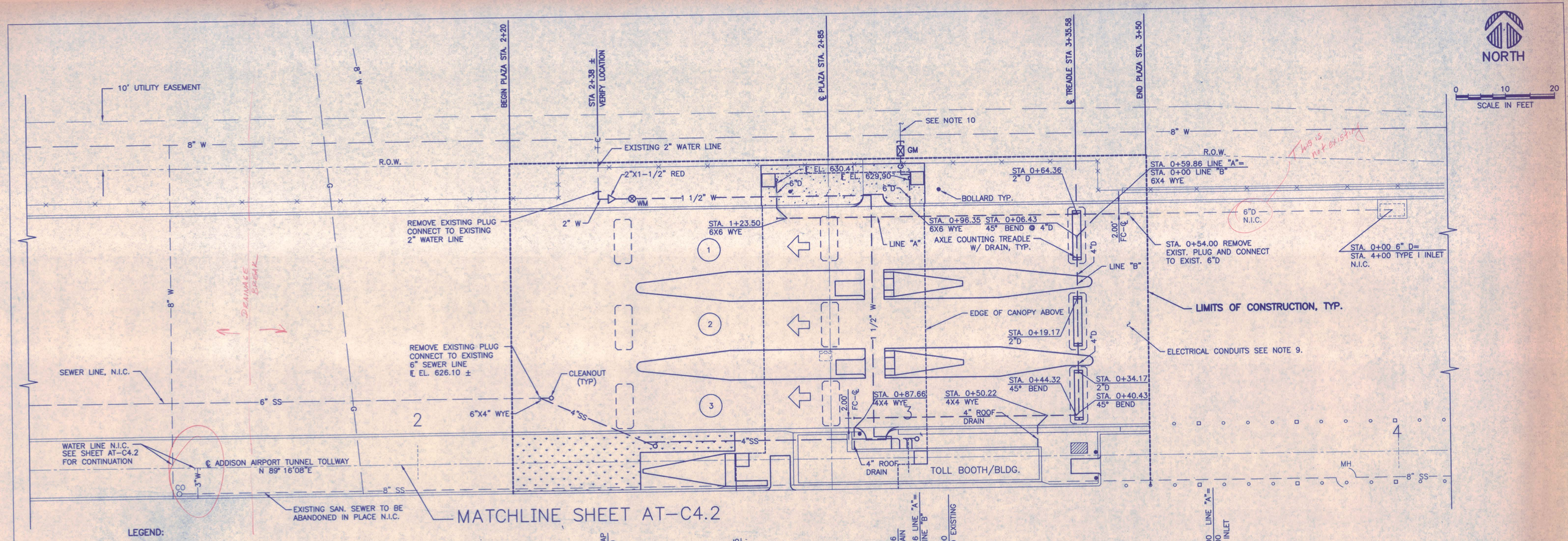

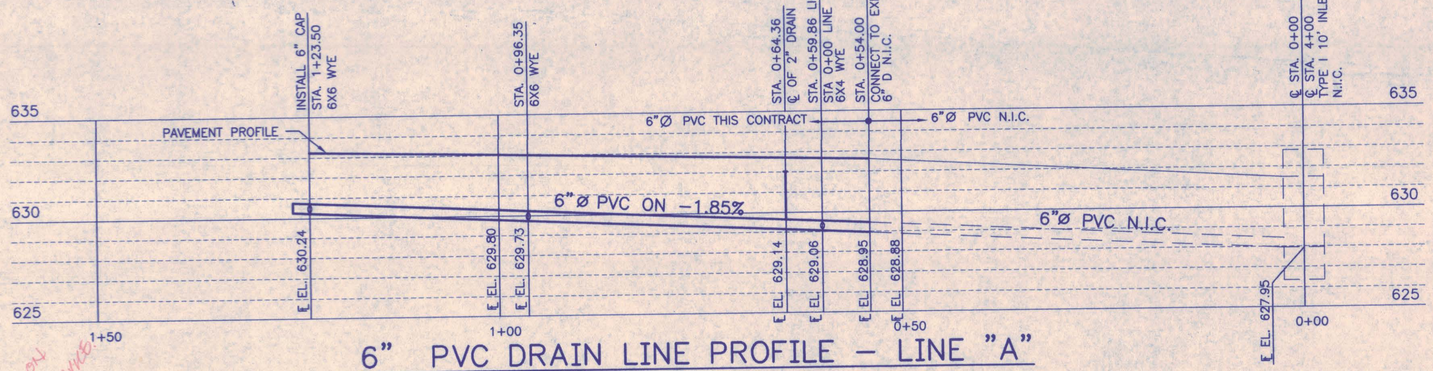

6" PVC DRAIN LINE PROFILE – LINE "A"

SCALE
HORZ: 1"= 10'
VERT: 1"= 4'

Double Check on Water Service!

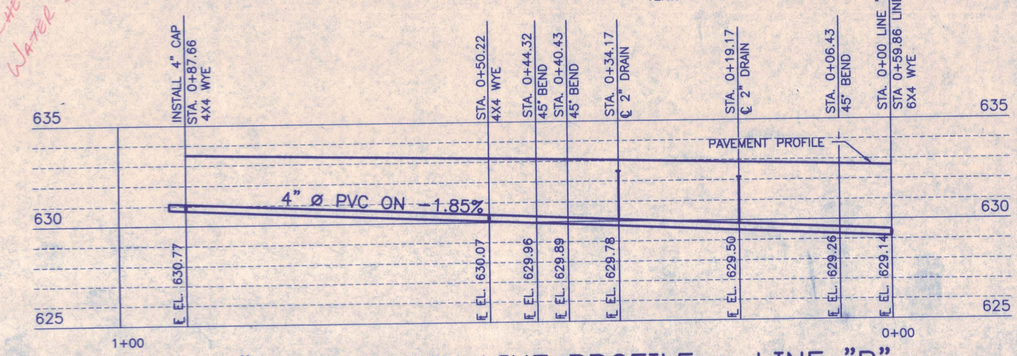

4" PVC DRAIN LINE PROFILE – LINE "B"

SCALE
HORZ: 1"= 10'
VERT: 1"= 4'

LEGEND:

NEW

- W — WATER LINE
- G — GAS LINE
- SS — SANITARY SEWER LINE
- D — DRAIN LINE
- WM — WATER METER (WM)
- GM — GAS METER (GM)

EXISTING OR BY OTHERS

- W-T — WATER LINE W/VALVE
- G — GAS LINE
- D — DRAIN LINE
- SS, MH, CO — SANITARY SEWER LINE W/MH AND CO

NOTES:

1. SEE GENERAL NOTES ON SHEET AT-C1.1.
2. ALL WATER, SANITARY SEWER, AND DRAINAGE CONSTRUCTION SHALL CONFORM TO THE TOWN OF ADDISON STANDARDS, AND NORTH CENTRAL TEXAS COUNCIL OF GOVERNMENTS STANDARD SPECIFICATIONS FOR PUBLIC WORK CONSTRUCTION.
3. ALL WATER LINES SHALL BE TYPE K COPPER PIPE CONFORMING TO ASTM B88.
4. ALL SANITARY SEWER LINES AND DRAIN LINES SHALL BE SDR-35 PVC PIPE.
5. EMBEDMENT FOR ALL PVC SANITARY SEWER LINES AND DRAIN LINES SHALL BE CLASS 4 EMBEDMENT CONFORMING TO TOWN OF ADDISON STANDARD CONSTRUCTION DETAILS.
6. CONTRACTOR SHALL PROVIDE SHEETING AND SHORING AS REQUIRED TO PROTECT EXISTING UTILITIES AND STRUCTURES.
7. PROVIDE A MINIMUM OF 3' COVER FOR ALL UTILITIES UNLESS OTHERWISE NOTED.
8. REFER TO PLUMBING DRAWINGS FOR CONTINUATION OF WATER AND SANITARY SEWER LINES TO TOLL BOOTH BUILDING.
9. REFER TO ELECTRICAL DRAWINGS FOR ELECTRICAL CONDUIT LOCATIONS.
10. CONNECTION TO EXISTING GAS LINE WILL BE PROVIDED BY LONE STAR GAS. THE CONTRACTOR SHALL COORDINATE WITH LONE STAR GAS TO DETERMINE THE EXACT LOCATION OF THE SERVICE BEYOND THE METER.
11. GAS METER AND REGULATOR TO PROVIDE 30 CFH AT MEDIUM PRESSURE 2 PSI TO 1.5 PSI.

12/11/97

STATE OF TEXAS
THAKOR J. SHETH
61192
REGISTERED PROFESSIONAL ENGINEER

NO.	REVISION	BY	DATE

NORTH TEXAS TOLLWAY AUTHORITY

ADDISON AIRPORT TUNNEL

UTILITY PLAN AND PROFILE A

Chiang, Patel & Yerby, Inc.
Consulting Engineers • Planners • Project Managers
Dallas • Fort Worth • Houston • San Antonio

AGUIRRE ASSOCIATES INC
12700 PARK CENTRAL DRIVE
15 TH FLOOR
DALLAS TEXAS 75251
TEL (972) 788-1508

SECTION XIII

DRAWN WAB	DATE 8/28/97	DESIGNED WAB	DATE 12/20/96
CHECKED TJS	DATE 11/5/97	SCALE 1"=10'-0"	

CONTRACT NO. DNT-290 SHEET 9 OF 53

AT-C4.1

1316111M AT-C41.DWG

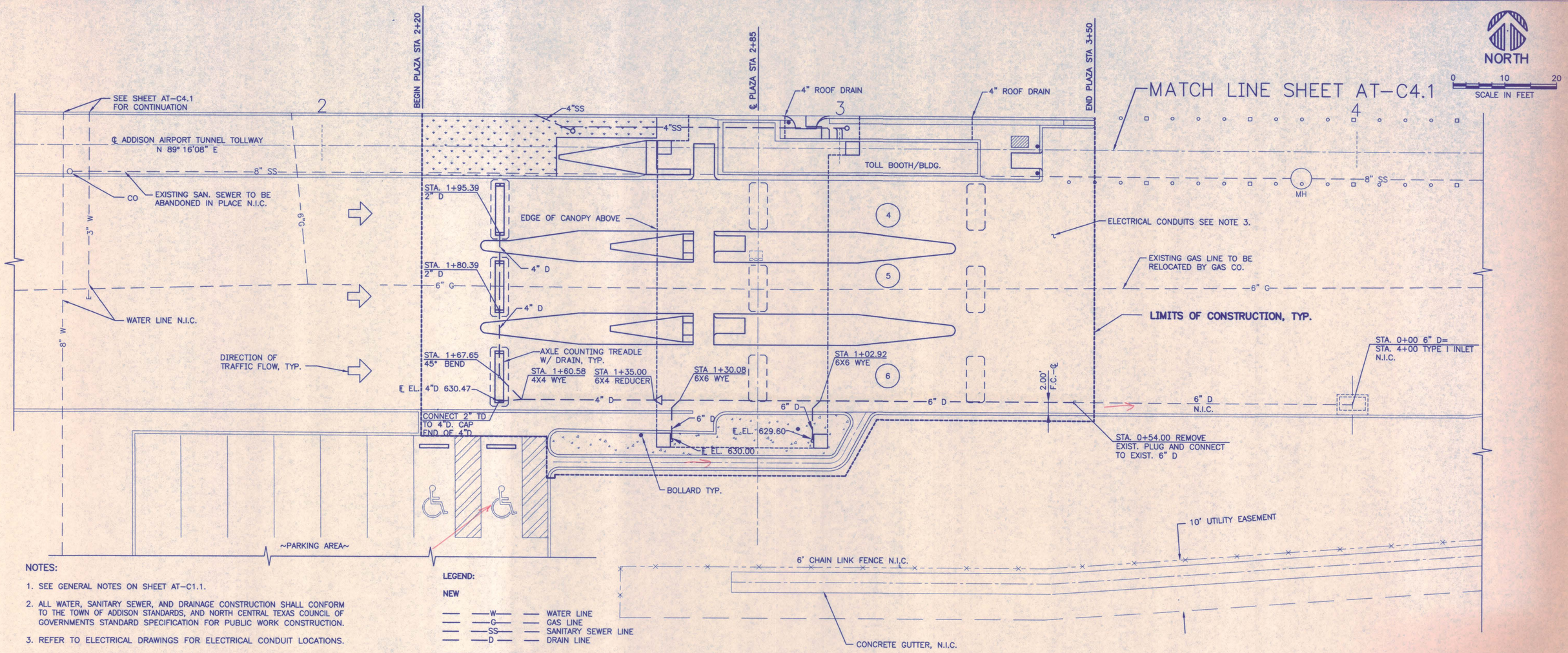

NOTES:

1. SEE GENERAL NOTES ON SHEET AT-C1.1.
2. ALL WATER, SANITARY SEWER, AND DRAINAGE CONSTRUCTION SHALL CONFORM TO THE TOWN OF ADDISON STANDARDS, AND NORTH CENTRAL TEXAS COUNCIL OF GOVERNMENTS STANDARD SPECIFICATION FOR PUBLIC WORK CONSTRUCTION.
3. REFER TO ELECTRICAL DRAWINGS FOR ELECTRICAL CONDUIT LOCATIONS.
4. REFER TO PLUMBING DRAWINGS FOR CONTINUATION OF WATER AND SEWER LINE TO TOLL BOOTH/BUILDING.
5. DRAIN SHALL BE SDR-35 PVC PIPE. EMBEDMENT FOR PVC DRAIN LINES SHALL BE CLASS 4 EMBEDMENT CONFORMING TO TOWN OF ADDISON STANDARD CONSTRUCTION DETAILS.
6. CONTRACTOR SHALL PROVIDE SHEETING AND SHORING AS REQUIRED TO PROTECT EXISTING UTILITIES AND STRUCTURES.

LEGEND:

NEW

- —W— WATER LINE
- —G— GAS LINE
- —SS— SANITARY SEWER LINE
- —D— DRAIN LINE

EXISTING OR BY OTHER

- —W T— WATER LINE W/VALVE
- —G— GAS LINE
- —D— DRAIN LINE
- MH —SS— CO — SANITARY SEWER LINE W/MH AND CO

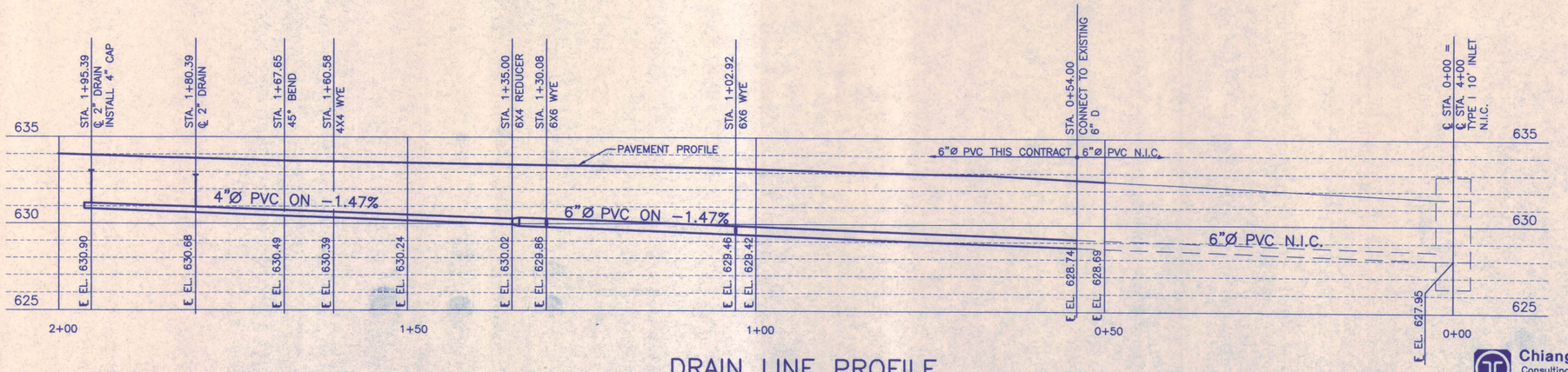

DRAIN LINE PROFILE

SCALE
HORZ: 1"= 10'
VERT: 1"= 4'

12/11/97

STATE OF TEXAS
THAKOR J. SHETH
61192
REGISTERED PROFESSIONAL ENGINEER

NO.	REVISION	BY	DATE

NORTH TEXAS TOLLWAY AUTHORITY

ADDISON AIRPORT TUNNEL

UTILITY PLAN AND PROFILE B

Chiang, Patel & Yerby, Inc.
Consulting Engineers • Planners • Project Managers
Dallas • Fort Worth • Houston • San Antonio

AGUIRRE ASSOCIATES INC
12700 PARK CENTRAL DRIVE
15 TH FLOOR
DALLAS TEXAS 75251
TEL (972) 788-1508

SECTION XIII

DRAWN WAB DATE 8/28/97 DESIGNED WAB DATE 12/20/96
CHECKED TJS DATE 11/5/97 SCALE 1"=10'-0"

CONTRACT NO. DNT-290 SHEET 10 OF 53

AT-C4.2

1317111M AT-C42.DWG

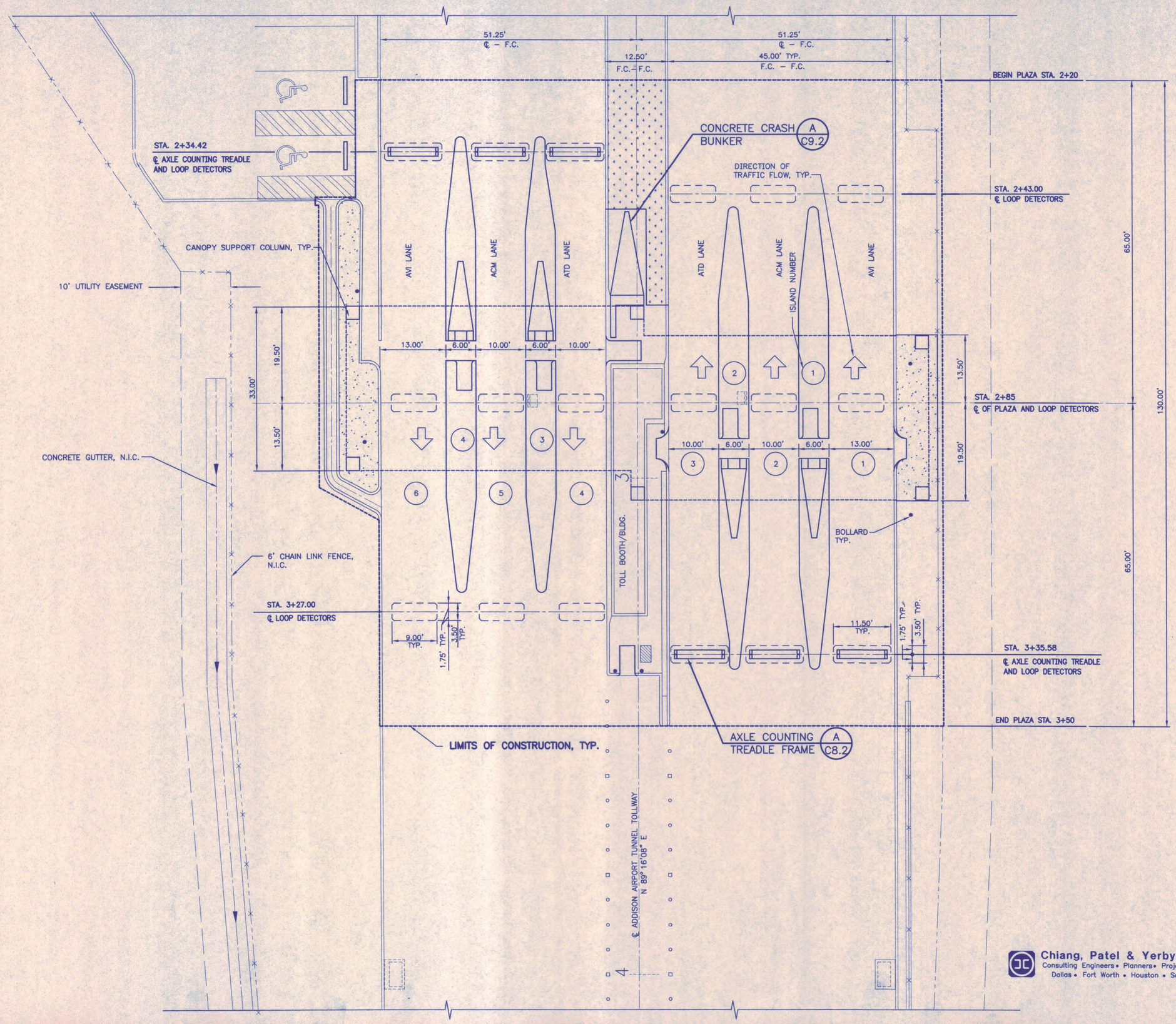

NOTES:

1. SEE GENERAL NOTES ON SHEET AT–C1.1.
2. FOR ISLAND DETAILS SEE SHEETS AT–C7.1 AND AT–C7.2.
3. FOR FURTHER INFORMATION ON THE TOLLBOOTH AND CANOPY STRUCTURES WITHIN THE MAIN PLAZA, SEE ARCHITECTURAL SHEETS AT–A2.1 AND STRUCTURAL SHEETS AT–S1.1
4. FOR INFORMATION ON GRADING AND ELEVATIONS IN THE MAIN PLAZA SEE SHEETS AT–C3.1 AND AT–C3.2.

12/11/97

STATE OF TEXAS
THAKOR J. SHETH
61192
REGISTERED PROFESSIONAL ENGINEER

NO.	REVISION	BY	DATE

NORTH TEXAS TOLLWAY AUTHORITY

ADDISON AIRPORT TUNNEL

PLAZA PLAN

AGUIRRE ASSOCIATES INC
12700 PARK CENTRAL DRIVE
15 TH FLOOR
DALLAS TEXAS 75251
TEL (972) 788-1508

SECTION XIII

DRAWN WAB DATE 8/28/97 DESIGNED WAB DATE 12/20/96
CHECKED TJS DATE 11/5/97 SCALE 1"=10'-0"

CONTRACT NO. DNT–290 SHEET 11 OF 53

Chiang, Patel & Yerby, Inc.
Consulting Engineers • Planners • Project Managers
Dallas • Fort Worth • Houston • San Antonio

AT-C5.1

131911M AT-C51.DWG

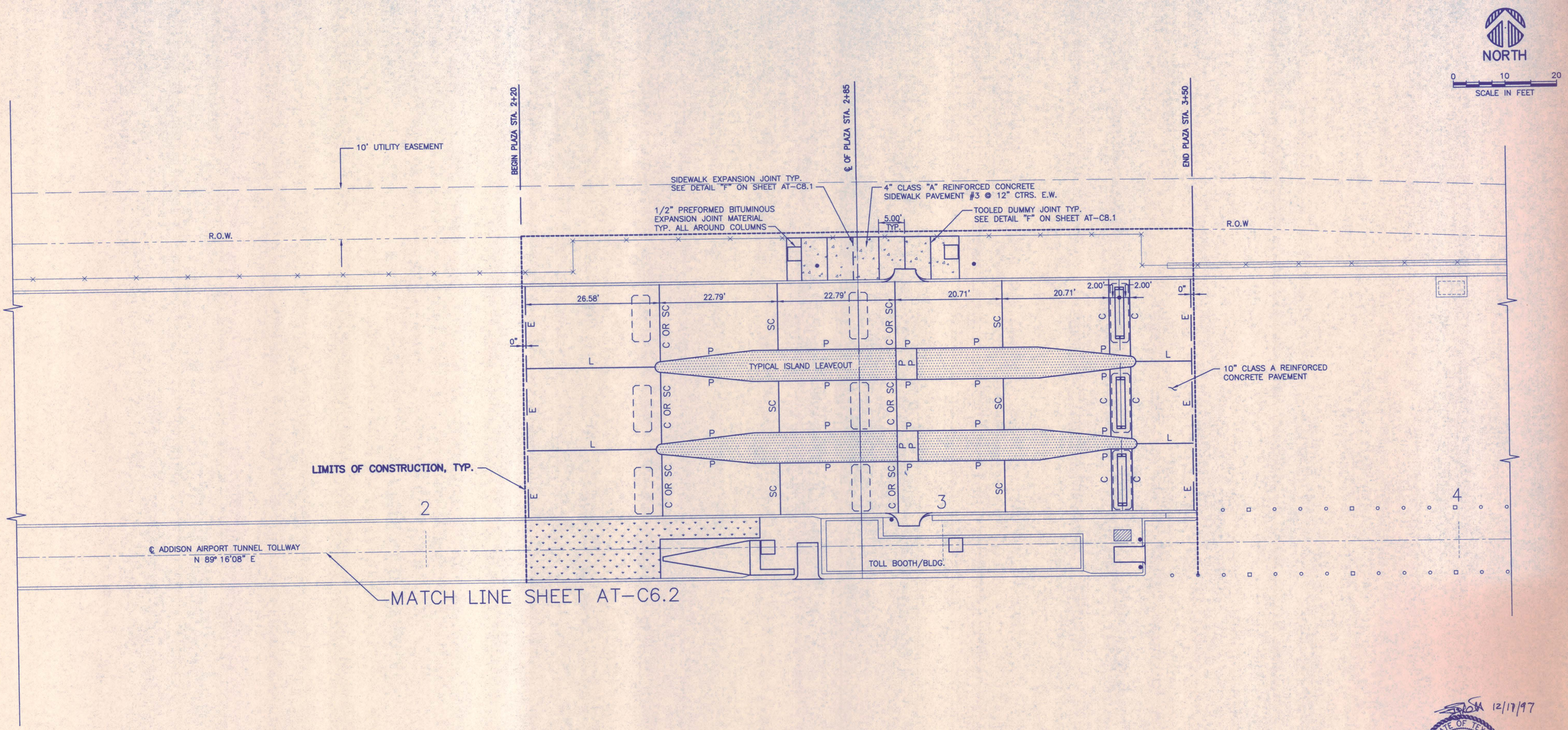

LEGEND:

E	EXPANSION JOINT
L	LONGITUDINAL CONSTRUCTION JOINT
C	CONSTRUCTION JOINT
SC	CONTRACTION JOINT
P	PLAZA JOINT
S	SAWED DUMMY JOINT
	DENOTES ISLAND LEAVEOUT

NOTE:

1. SEE GENERAL NOTES ON SHEET AT-C1.1.

Chiang, Patel & Yerby, Inc.
Consulting Engineers • Planners • Project Managers
Dallas • Fort Worth • Houston • San Antonio

AT-C6.1

12/17/97

STATE OF TEXAS
THAKOR J. SHETH
61192
REGISTERED
PROFESSIONAL ENGINEER

NO.	REVISION	BY	DATE

NORTH TEXAS TOLLWAY AUTHORITY

ADDISON AIRPORT TUNNEL

PAVEMENT JOINTING PLAN A

AGUIRRE ASSOCIATES INC
12700 PARK CENTRAL DRIVE
15 TH FLOOR
DALLAS TEXAS 75251
TEL (972) 788-1508

SECTION XIII

DRAWN WAB DATE 8/28/97 DESIGNED WAB DATE 12/20/96
CHECKED TJS DATE 11/5/97 SCALE 1"=10'-0"

CONTRACT NO. DNT-290 SHEET 12 OF 53

132211M AT-C61.DWG

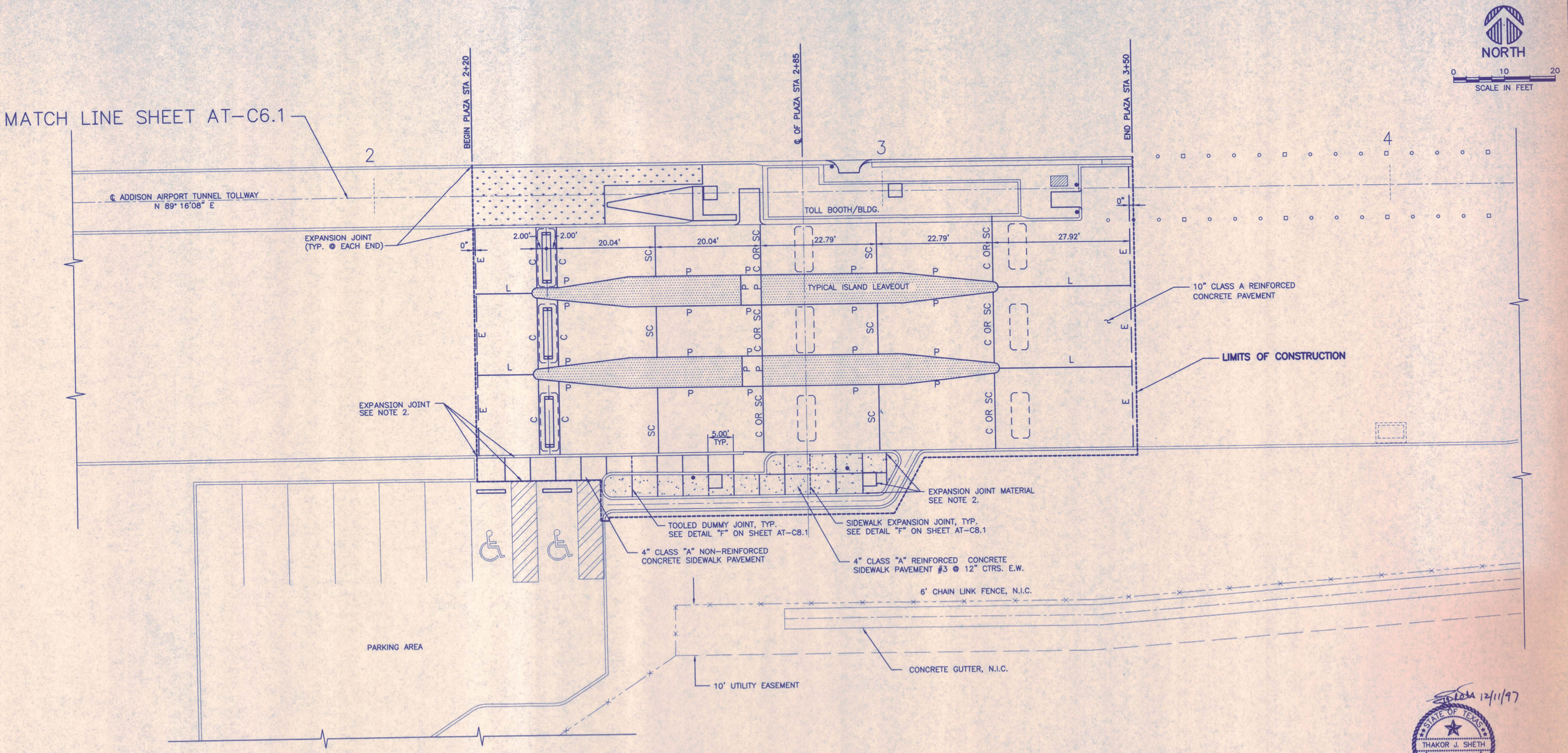

12/11/97

STATE OF TEXAS
THAKOR J. SHETH
61192
REGISTERED PROFESSIONAL ENGINEER

LEGEND:

E	EXPANSION JOINT
L	LONGITUDINAL CONSTRUCTION JOINT
C	CONSTRUCTION JOINT
SC	CONTRACTION JOINT
P	PLAZA JOINT
S	SAWED DUMMY JOINT
	DENOTES ISLAND LEAVEOUT

NOTES:

1. SEE GENERAL NOTES ON SHEET AT-C1.1.
2. PROVIDE 1/2" PREFORMED BITUMINOUS EXPANSION JOINT MATERIAL ALONG THE BACK OF CURB, ALONG PARKING AREA PAVEMENT AND AROUND THE STRUCTURAL COLUMNS FOR THE CANOPY.

NO.	REVISION	BY	DATE

NORTH TEXAS TOLLWAY AUTHORITY

ADDISON AIRPORT TUNNEL

PAVEMENT JOINTING PLAN B

Chiang, Patel & Yerby, Inc.
Consulting Engineers • Planners • Project Managers
Dallas • Fort Worth • Houston • San Antonio

AGUIRRE ASSOCIATES INC
12700 PARK CENTRAL DRIVE
15 TH FLOOR
DALLAS TEXAS 75251
TEL (972) 788-1608

SECTION XIII

DRAWN WAB	DATE 8/28/97	DESIGNED WAB	DATE 12/20/96
CHECKED TJS	DATE 11/5/97	SCALE 1"=10'-0"	

CONTRACT NO. DNT-290 SHEET 13 OF 53

AT-C6.2

13231.1M AT-C62.DWG

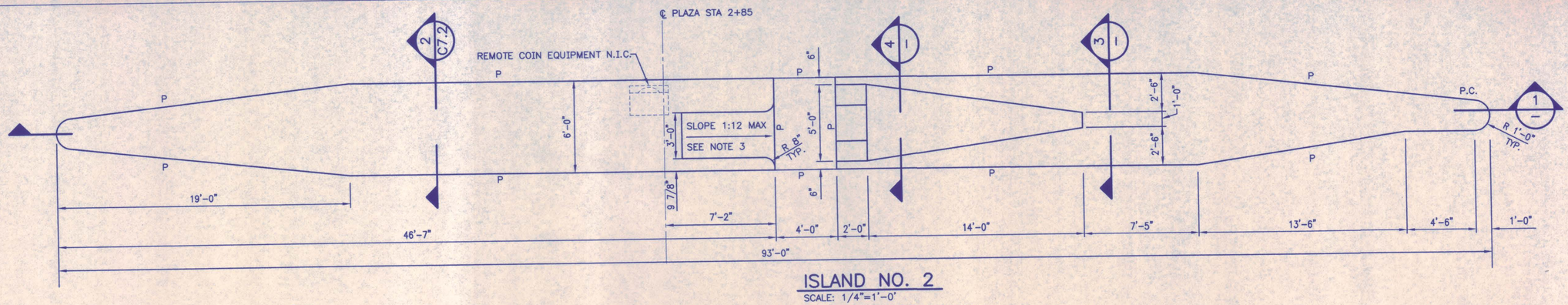

ISLAND NO. 2

SCALE: 1/4"=1'-0"

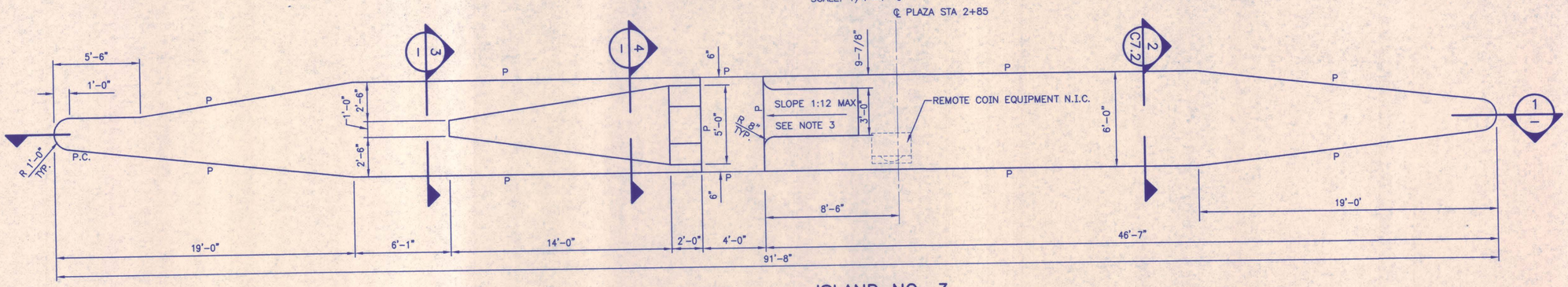

ISLAND NO. 3

SCALE: 1/4"=1'-0"

P – PLAZA CURB

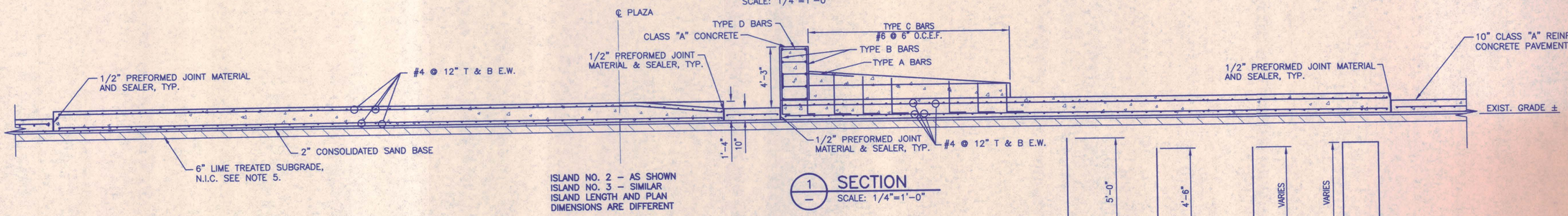

1/– SECTION

SCALE: 1/4"=1'-0"

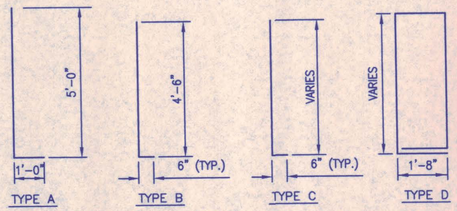

BAR BENDING DIAGRAMS

SCALE: 3/8"=1'-0"

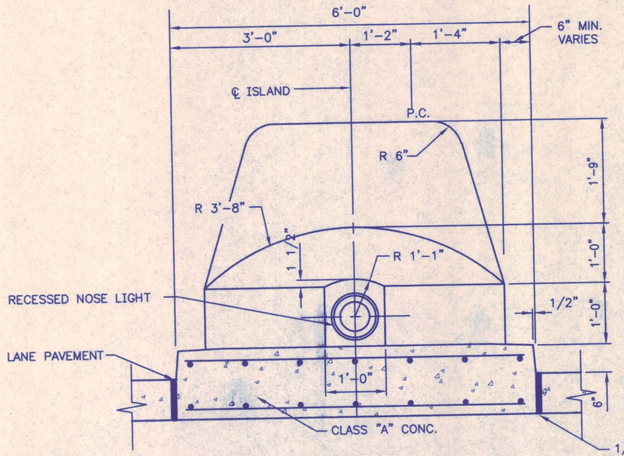

3/–,C7.2 SECTION

SCALE: 3/4"=1'-0"

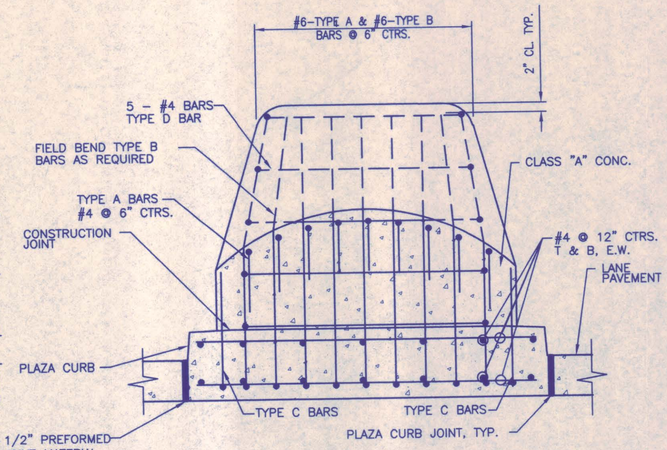

4/–,C7.2 SECTION

SCALE: 3/4"=1'-0"

NOTES:

1. FOR FURTHER INFORMATION ON THE LOCATION AND TYPE OF ELECTRICAL UTILITIES AND APPURTENANCES WITHIN THE MAIN PLAZA, SEE ELECTRICAL DRAWINGS.
2. FOR FURTHER INFORMATION ON THE TOLLBOOTH BLDG. AND CANOPY STRUCTURES WITHIN THE MAIN PLAZA, SEE STRUCTURAL AND ARCHITECTURAL DRAWINGS.
3. ALL ACCESS RAMPS EXCEPT RAMPS AT THE NORTH CANOPY COLUMNS AND NORTH OF THE TOLL BOOTH SHALL BE CONSTRUCTED IN ACCORDANCE WITH ADA ACCESSIBILITY GUIDELINES FOR BUILDINGS AND FACILITIES. RAMP SURFACE AREA SHALL BE COVERED WITH DETECTABLE WARNINGS AS DESCRIBED IN THESE STANDARDS.
4. SEE GENERAL NOTES ON SHEET AT-C1.1.
5. LIME TREATMENT OF SUBGRADE WITHIN AND ADJACENT TO THE PLAZA CONSTRUCTION LIMITS HAS PREVIOUSLY BEEN LIME TREATED AND STABILIZED BY OTHERS. IF THAT LIME STABILIZED SUBGRADE SUBSEQUENTLY IS DAMAGED BY THE CONTRACTOR'S CONSTRUCTION OPERATIONS, THE SUBGRADE SHALL BE REPAIRED WITH AVAILABLE STOCKPILED LIME TRIMMINGS OR WITH LIME SLURRY AS DIRECTED BY THE ENGINEER.

Chiang, Patel & Yerby, Inc.
Consulting Engineers • Planners • Project Managers
Dallas • Fort Worth • Houston • San Antonio

AT-C7.1

12/11/97

STATE OF TEXAS
THAKOR J. SHETH
61192
REGISTERED PROFESSIONAL ENGINEER

NO.	REVISION	BY	DATE

NORTH TEXAS TOLLWAY AUTHORITY

ADDISON AIRPORT TUNNEL

TYPICAL ISLAND PLANS, SECTIONS AND DETAILS I

AGUIRRE ASSOCIATES INC
12700 PARK CENTRAL DRIVE
15 TH FLOOR
DALLAS TEXAS 75251
TEL (972) 788-1508

SECTION XIII

DRAWN WAB	DATE 8/28/97	DESIGNED WAB	DATE 12/20/96
CHECKED TJS	DATE 11/5/97	SCALE AS SHOWN	

CONTRACT NO. DNT-290 SHEET 14 OF 53

132411M AT-C71.DWG

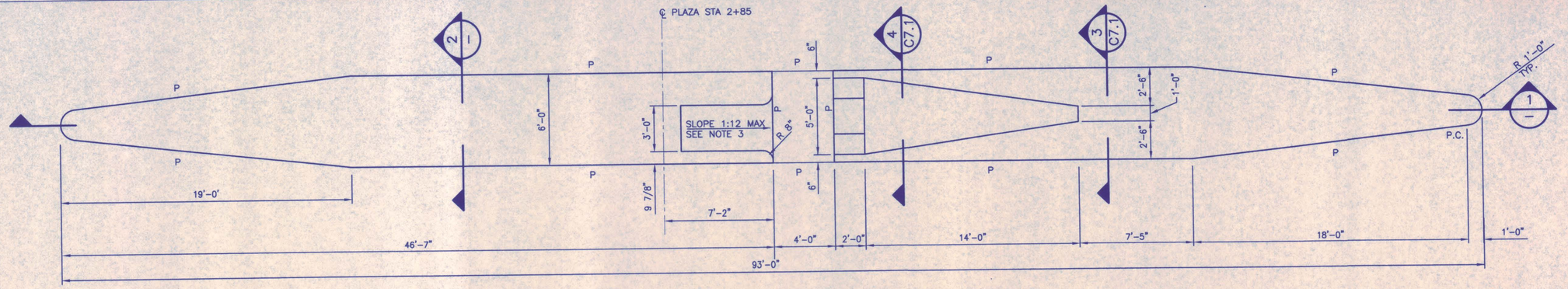

ISLAND NO. 1

SCALE: 1/4"=1'-0"

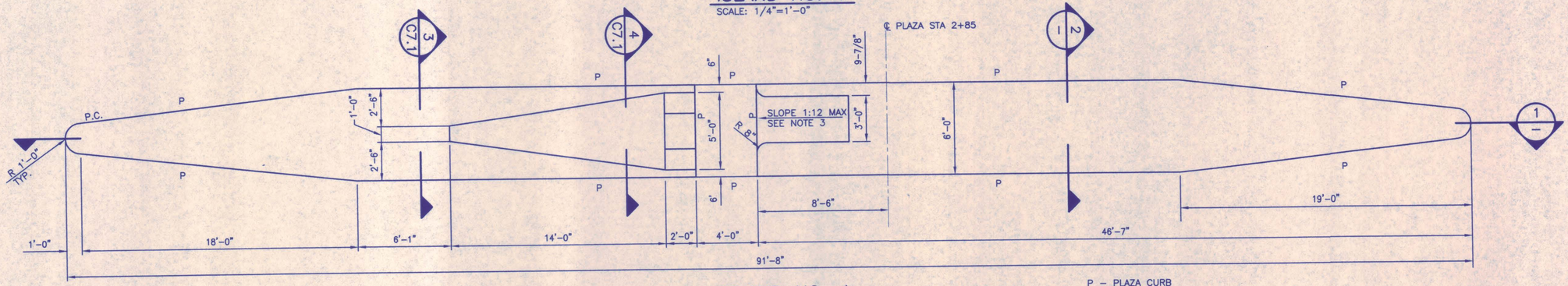

ISLAND NO. 4

SCALE: 1/4"=1'-0"

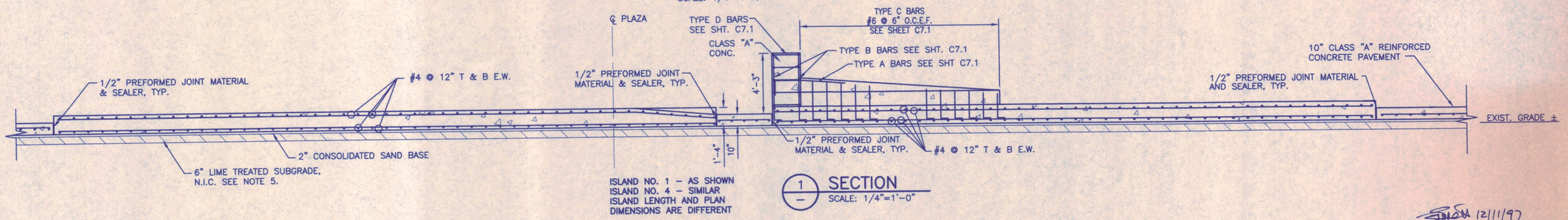

1/- SECTION

SCALE: 1/4"=1'-0"

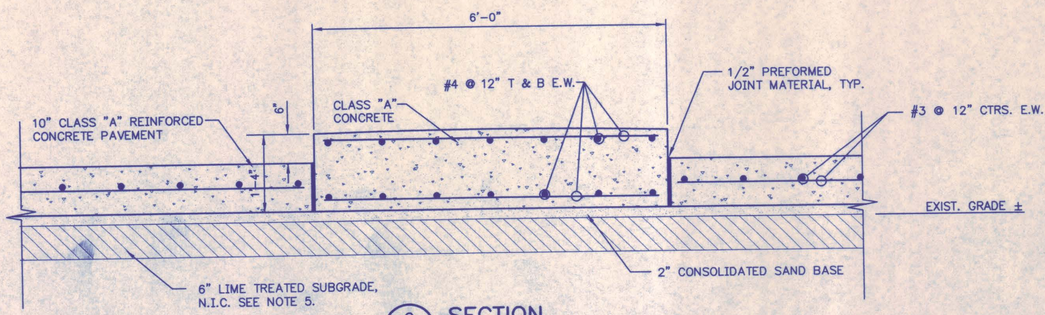

2/-,C7.1 SECTION

SCALE: 3/4"=1'-0"

NOTES:

1. FOR FURTHER INFORMATION ON THE LOCATION AND TYPE OF ELECTRICAL UTILITIES AND APPURTENANCES WITHIN THE MAIN PLAZA, SEE ELECTRICAL DRAWINGS.
2. FOR FURTHER INFORMATION ON THE TOLLBOOTH AND CANOPY STRUCTURES WITHIN THE BARRIER PLAZA, SEE STRUCTURAL AND ARCHITECTURAL DRAWINGS.
3. ALL ACCESS RAMPS EXCEPT RAMPS AT THE NORTH CANOPY COLUMNS AND NORTH OF THE TOLL BOOTH SHALL BE CONSTRUCTED IN ACCORDANCE WITH ADA ACCESSIBILITY GUIDELINES FOR BUILDINGS AND FACILITIES. RAMP SURFACE AREA SHALL BE COVERED WITH A DETECTABLE WARNINGS AS DESCRIBED IN THESE STANDARDS.
4. SEE GENERAL NOTES ON SHEET AT-C1.1.
5. THE LIME TREATED SUBGRADE WITHIN AND ADJACENT TO THE TOLL PLAZA CONSTRUCTION HAS PREVIOUSLY BEEN LIME TREATED AND STABILIZED BY OTHERS. IF THAT LIME STABILIZED SUBGRADE SUBSEQUENTLY IS DAMAGED BY THE CONTRACTOR'S CONSTRUCTION OPERATIONS, THE SUBGRADE SHALL BE REPAIRED WITH AVAILABLE STOCKPILED LIME TRIMMINGS OR WITH LIME SLURRY AS DIRECTED BY THE ENGINEER.

Chiang, Patel & Yerby, Inc.
Consulting Engineers • Planners • Project Managers
Dallas • Fort Worth • Houston • San Antonio

AT-C7.2

12/11/97

STATE OF TEXAS
THAKOR J. SHETH
61192
REGISTERED
PROFESSIONAL ENGINEER

NO.	REVISION	BY	DATE

NORTH TEXAS TOLLWAY AUTHORITY

ADDISON AIRPORT TUNNEL

TYPICAL ISLAND PLANS, SECTIONS AND DETAILS II

AGUIRRE
AGUIRRE ASSOCIATES INC
12700 PARK CENTRAL DRIVE
15 TH FLOOR
DALLAS TEXAS 75251
TEL (972) 788-1508

SECTION XIII

DRAWN WAB	DATE 8/28/97	DESIGNED WAB	DATE 12/20/96
CHECKED TJS	DATE 11/5/97	SCALE AS SHOWN	

CONTRACT NO. DNT-290 SHEET 15 OF 53

1326111M AT-C72.DWG

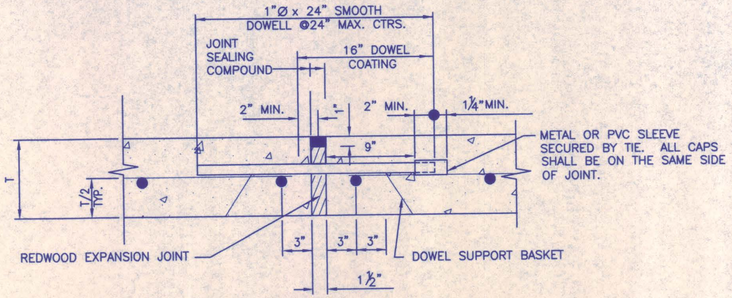

A EXPANSION JOINT (E)
SCALE: 1 1/2" = 1'

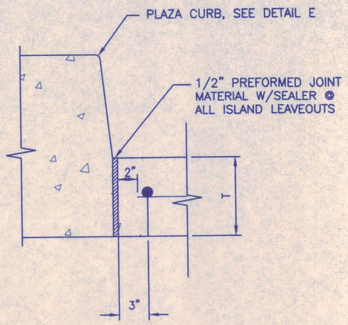

B PLAZA JOINTS (P)
SCALE: 1 1/2" = 1'

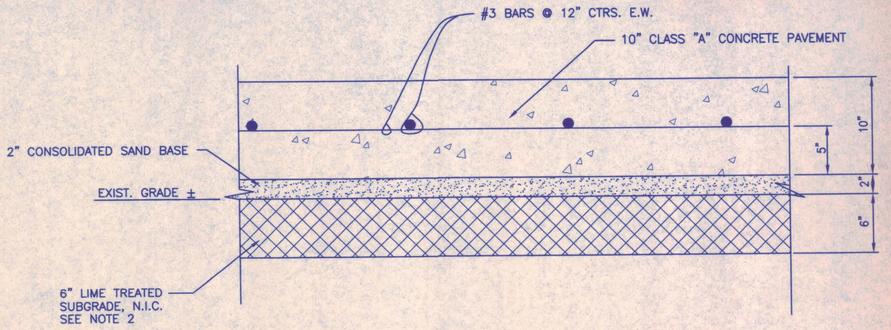

C TYPICAL PLAZA PAVEMENT
SCALE: 1 1/2" = 1'

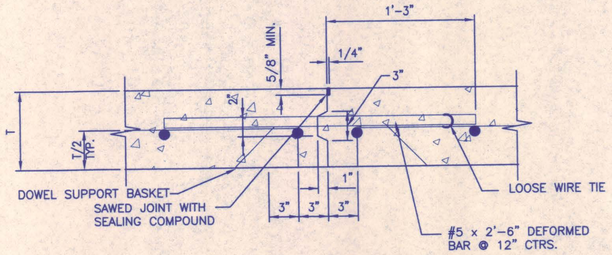

D LONGITUDINAL JOINT (L) & CONSTRUCTION JOINT (C)
SCALE: 1 1/2" = 1'

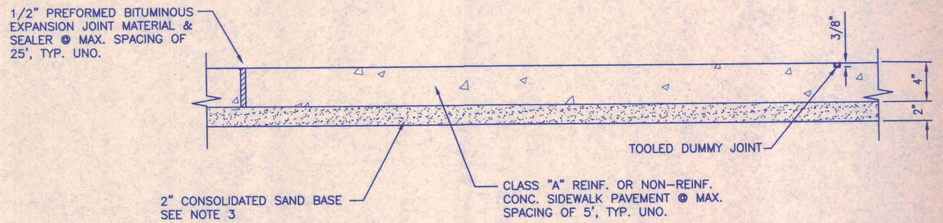

F TYPICAL SIDEWALK JOINTS
SCALE: 1 1/2" = 1'

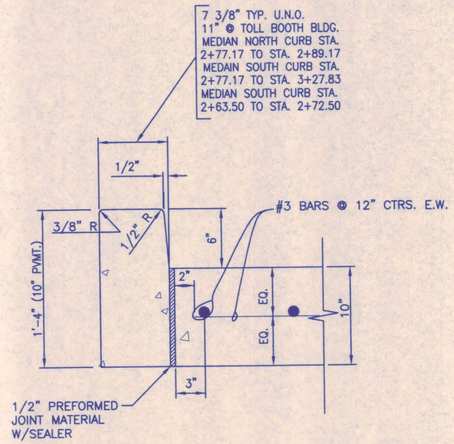

E TYPE P MONOLITHIC CURB
SCALE: SCALE: 1 1/2" = 1'

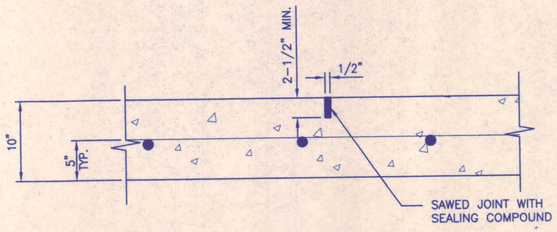

G SAWED DUMMY JOINT (S)
SCALE: 1 1/2" = 1'

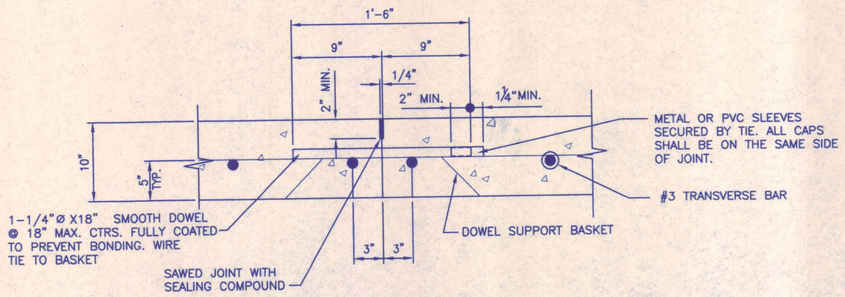

H CONTRACTION JOINT (SC)
SCALE: 1 1/2" = 1'

NOTES:

1. PLAZA CONTRACTOR SHALL PROVIDE ALL EXPANSION JOINT HARDWARE BETWEEN PLAZA AND ROADWAY TO ROADWAY CONTRACTOR.
2. THE LIME TREATED SUBGRADE WITHIN AND ADJACENT TO THE TOLL PLAZA CONSTRUCTION LIMITS HAS PREVIOUSLY BEEN LIME TREATED AND STABILIZED BY OTHERS. IF THAT LIME STABILIZED SUBGRADE SUBSEQUENTLY IS DAMAGED BY THE CONTRACTOR'S CONSTRUCTION OPERATIONS, THE SUBGRADE SHALL BE REPAIRED WITH AVAILABLE STOCKPILED LIME TRIMMINGS OR WITH LIME SLURRY AS DIRECTED BY THE ENGINEER.
3. ANY FILL MATERIAL REQUIRED BELOW 2" SAND BASE FOR SIDEWALK AND BELOW CONC. PAVEMENT SHALL BE SELECT FILL MATERIAL WITH A LIQUID LIMIT OF 35 OR LESS AND PLASTICITY INDEX BETWEEN 8 AND 20. A MINIMUM OF 35 PERCENT PASSING NO. 200 SIEVE, A MINIMUM OF 85 PERCENT PASSING NO. 4 SIEVE AND FREE FROM ORGANIC OR OTHER DELETERIOUS MATERIAL. SELECT FILL MATERIAL SHALL BE PLACED IN MAXIMUM OF 6" LAYERS, LOOSE MEASURE COMPACTED TO NOT LESS THAN 98 PERCENT OF MAXIMUM DENSITY AS DETERMINED BY TXDOT METHOD TEX-114-E. REFER TO TXDOT's SPECIFICATIONS AND NTTA's SPECIAL PROVISIONS ITEM 132 FOR FILL MATERIAL AND COMPACTION REQUIREMENTS.

12/11/97

STATE OF TEXAS
THAKOR J. SHETH
61192
REGISTERED PROFESSIONAL ENGINEER

Chiang, Patel & Yerby, Inc.
Consulting Engineers • Planners • Project Managers
Dallas • Fort Worth • Houston • San Antonio

AT-C8.1

NO.	REVISION	BY	DATE

NORTH TEXAS TOLLWAY AUTHORITY
ADDISON AIRPORT TUNNEL

PAVEMENT SECTIONS AND DETAILS

AGUIRRE ASSOCIATES INC.
12700 PARK CENTRAL DRIVE
15 TH FLOOR
DALLAS TEXAS 75251
TEL (972) 788-1508

SECTION XIII

DRAWN MM	DATE 8/28/97	DESIGNED MM	DATE 12/20/96
CHECKED TJS	DATE 11/5/97	SCALE AS SHOWN	

CONTRACT NO. DNT-290 SHEET 16 OF 53

133011M AT-C81.DWG

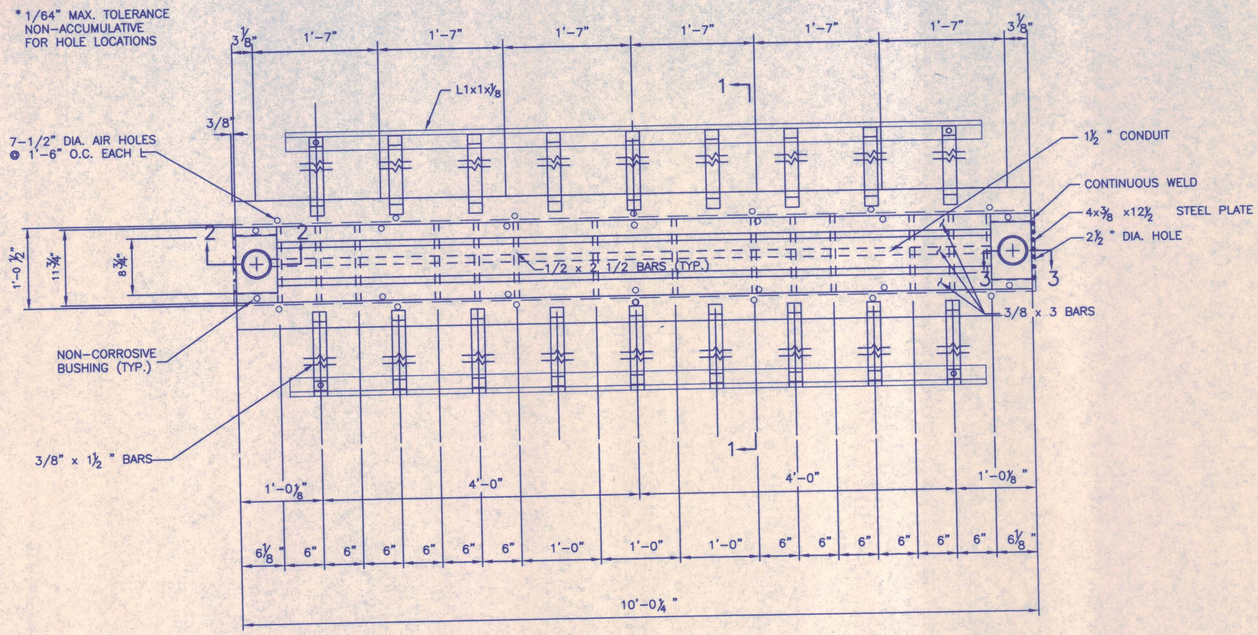

A / C5.1 AXLE COUNTING TREADLE FRAME

SCALE: 1" = 1'-0"

NOTES:

1. TREADLE FRAME WILL BE FURNISHED BY OWNER TO PLAZA CONTRACTOR FOR INSTALLATION.
2. PLAZA CONTRACTOR SHALL FURNISH AND INSTALL ALL CONDUITS AND DRAIN LINES TO TREADLE FRAME JUNCTION BOXES AS SHOWN ON THE DRAWINGS.
3. VERIFY LOCATION OF TREADLE WITH TTA PRIOR TO PAVEMENT CONSTRUCTION.
4. REFER TO ELECTRICAL DRAWINGS FOR CONTINUATION OF ELECTRICAL CONDUIT FROM AXLE COUNTING TREADLE.
5. SURFACE PREPARATION – SSPC SP-6 COMMERCIAL BLAST CLEANING. PRIMER 5.0 MILS DFT – TNEMEC, 66 COLOR, HIGH BUILD PRIMER OR CARBOLINE, 890 EPOXY. FINISH COAT 4.0 MILS DFT – TNEMEC, 75-COLOR, ENDURA SHEILD OR CARBOLINE, 134 HS POLYURETHANE. PRIMER AND FINISH COAT PAINT SHALL BE SUPPLIED BY A SINGLE MANUFACTURER.
6. 4"Ø PVC DRAIN IS NOT SHOWN FOR CLARITY.

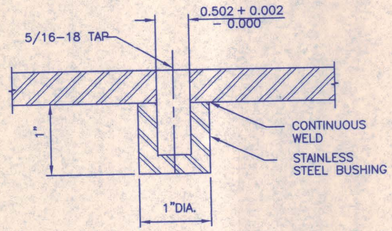

SECTION THRU NON CORROSIVE BUSHING

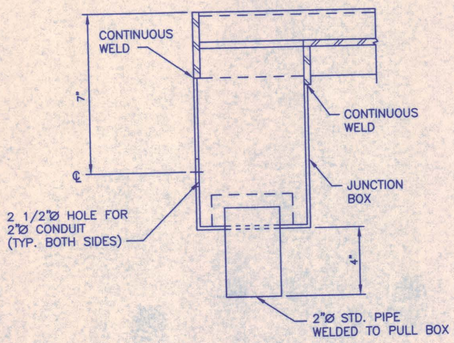

2,3 / – SECTION

SCALE: NONE

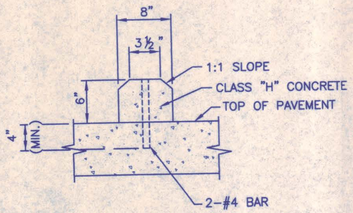

NOTES:

1. PRECAST CONCRETE BUMPER SHALL BE 6' LONG.
2. MINIMUM COMPRESSIVE STRENGTH OF CONCRETE AT 28 DAYS SHALL BE 3,500 p.s.i.

C / C3.2 PRECAST CONCRETE BUMPER

SCALE: NONE

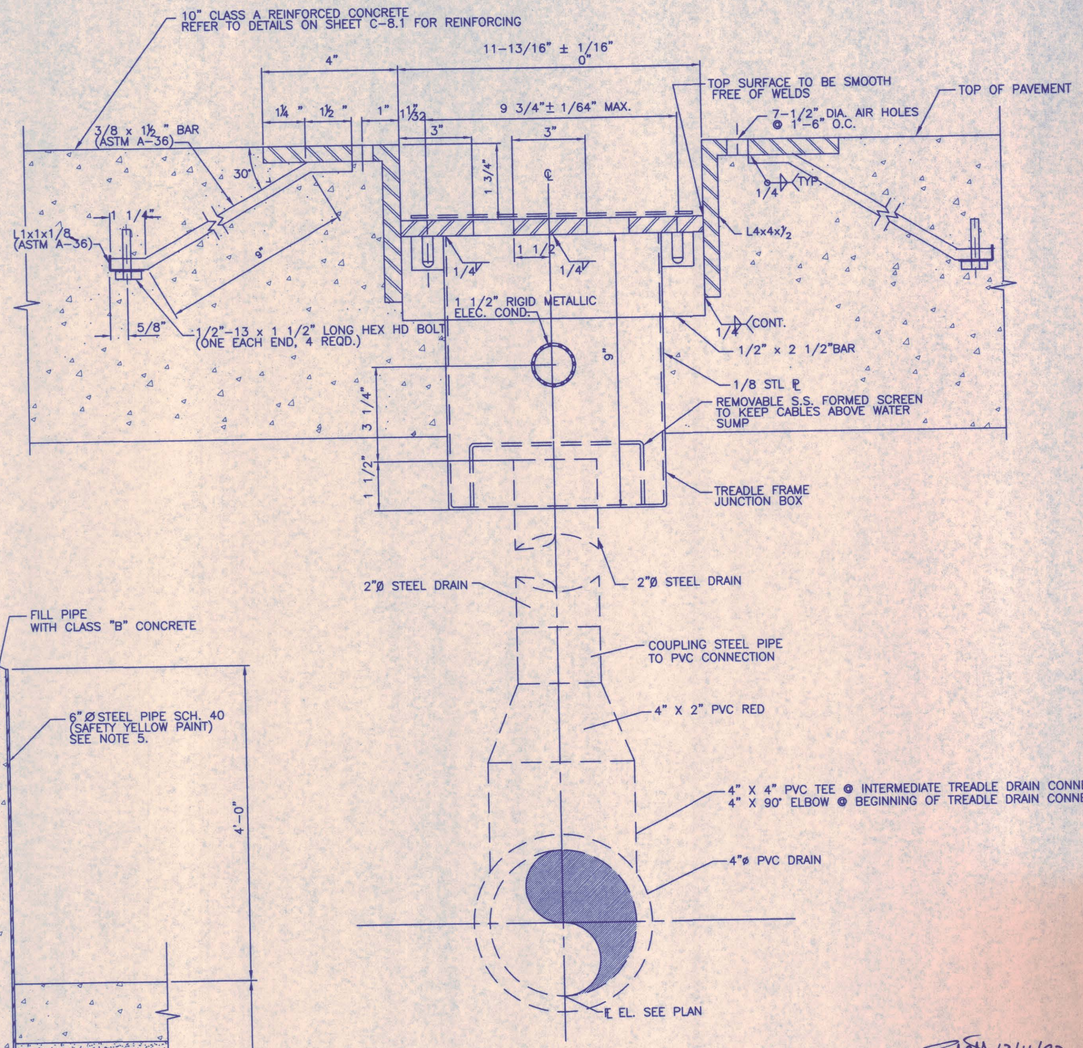

1 / – SECTION

SCALE: NONE

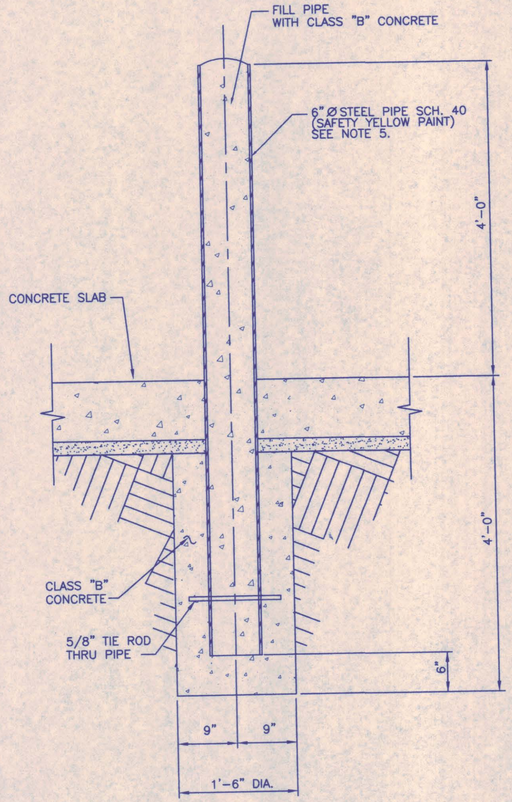

B / C3.1 BOLLARD

SCALE: 1" = 1'-0"

Chiang, Patel & Yerby, Inc.
Consulting Engineers • Planners • Project Managers
Dallas • Fort Worth • Houston • San Antonio

AT-C8.2

12/11/97

STATE OF TEXAS
THAKOR J. SHETH
61192
REGISTERED PROFESSIONAL ENGINEER

NO.	REVISION	BY	DATE

NORTH TEXAS TOLLWAY AUTHORITY

ADDISON AIRPORT TUNNEL

DETAILS AND SECTIONS

AGUIRRE ASSOCIATES INC
12700 PARK CENTRAL DRIVE
15 TH FLOOR
DALLAS TEXAS 75251
TEL (972) 788-1508

SECTION XIII

DRAWN MM DATE 8/28/97 DESIGNED MM DATE 12/20/96
CHECKED TJS DATE 11/5/97 SCALE AS SHOWN

CONTRACT NO. DNT-290 SHEET 17 OF 53

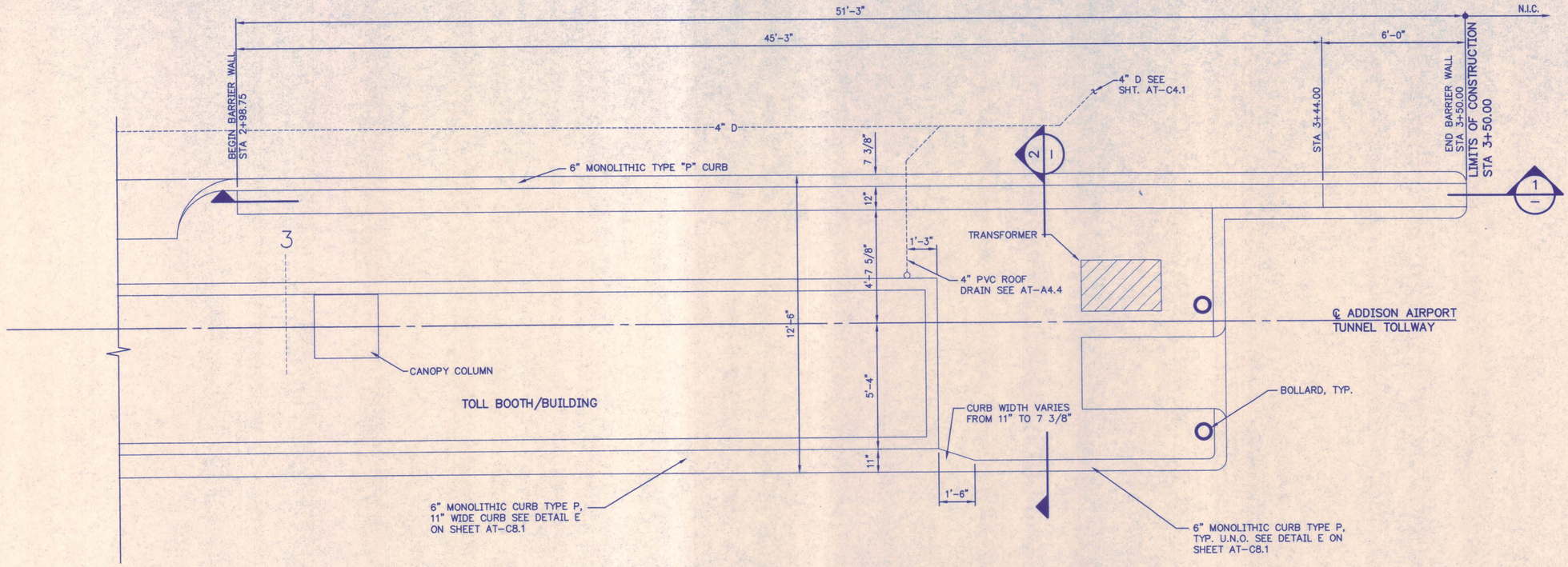

BARRIER WALL
SCALE: 3/8"=1'-0"

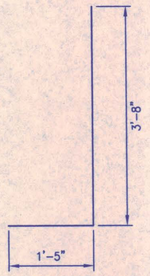

TYPE A

BAR BENDING DIAGRAM
SCALE: 3/4"=1'-0"

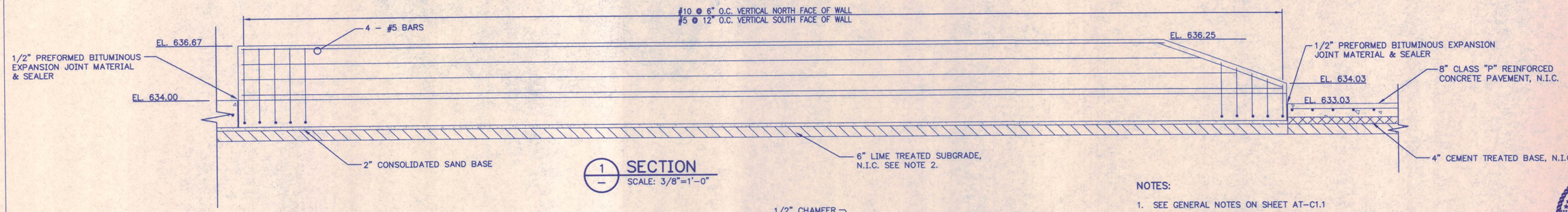

1 SECTION
SCALE: 3/8"=1'-0"

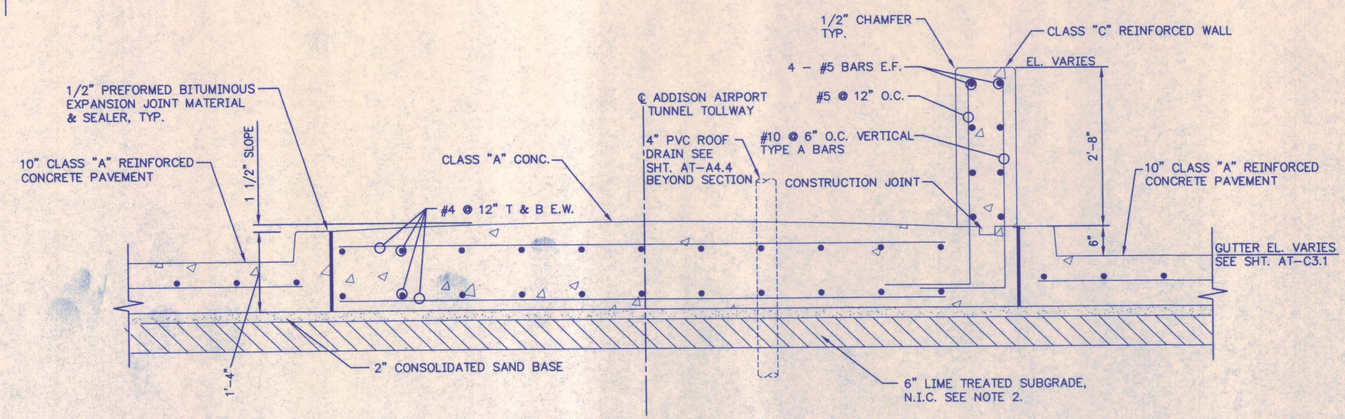

2 SECTION
SCALE: 3/4"=1'-0"

NOTES:

1. SEE GENERAL NOTES ON SHEET AT-C1.1
2. THE LIME TREATED SUBGRADE WITHIN AND ADJACENT TO THE CONSTRUCTION LIMITS HAS PREVIOUSLY BEEN LIME TREATED AND STABILIZED BY OTHERS. IF THAT LIME STABILIZED SUBGRADE SUBSEQUENTLY IS DAMAGED BY THE CONTRACTOR'S CONSTRUCTION OPERATIONS, THE SUBGRADE SHALL BE REPAIRED WITH AVAILABLE STOCKPILED LIME TRIMMINGS OR WITH LIME SLURRY AS DIRECTED BY THE ENGINEER.

12/11/97

STATE OF TEXAS
THAKOR J. SHETH
61192
REGISTERED PROFESSIONAL ENGINEER

NO.	REVISION	BY	DATE

NORTH TEXAS TOLLWAY AUTHORITY
ADDISON AIRPORT TUNNEL

BARRIER WALL DETAIL
AND SECTIONS

Chiang, Patel & Yerby, Inc.
Consulting Engineers • Planners • Project Managers
Dallas • Fort Worth • Houston • San Antonio

AGUIRRE ASSOCIATES INC
12700 PARK CENTRAL DRIVE
15 TH FLOOR
DALLAS TEXAS 75251
TEL (972) 788-1508

SECTION XIII

DRAWN WAB DATE 8/28/97 DESIGNED WAB DATE 12/20/96
CHECKED TJS DATE 8/28/97 SCALE AS SHOWN

CONTRACT NO. DNT-290 SHEET 18 OF 53

AT-C9.1

133311M AT-C9I.DWG

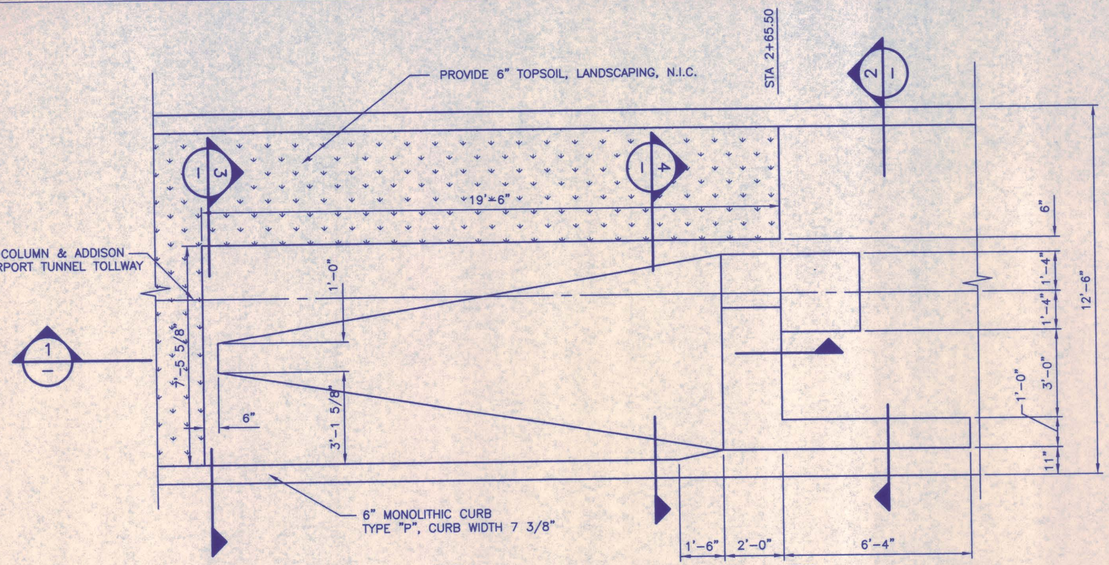

A / C5.1 CONCRETE CRASH BUNKER
SCALE: 3/8"=1'-0"

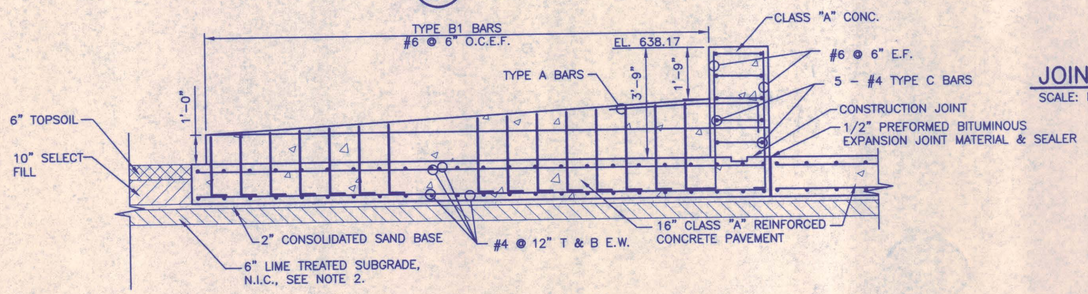

1 / — SECTION
SCALE: 3/8"=1'-0"

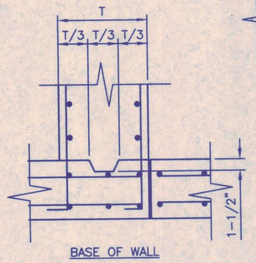

JOINTS WITHOUT WATER STOPS
SCALE: N.T.S.

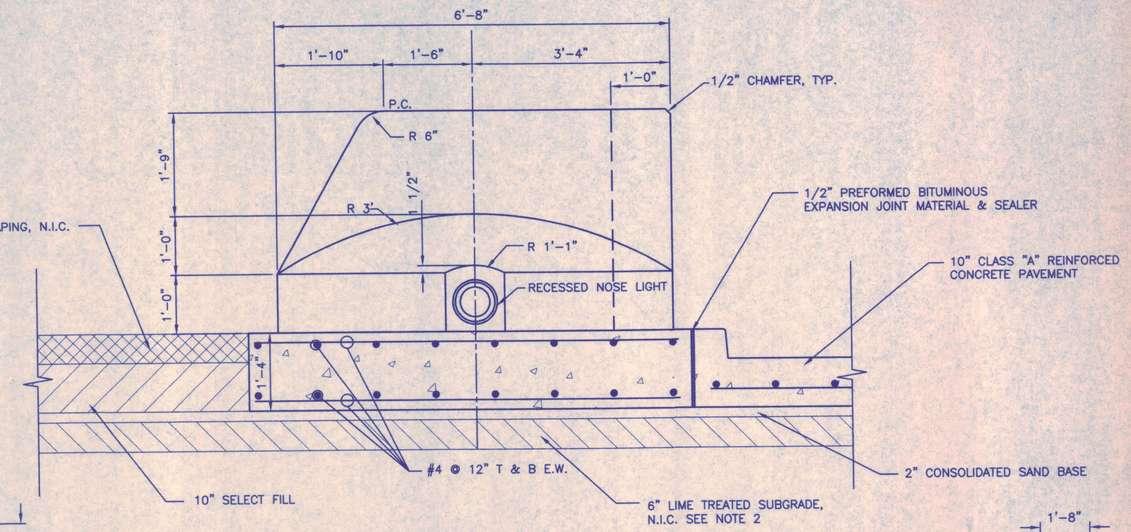

3 / — SECTION
SCALE: 3/4"=1'-0"

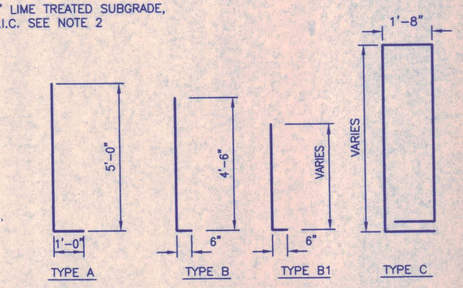

BAR BENDING DIAGRAMS
SCALE: 3/8"=1'-0"

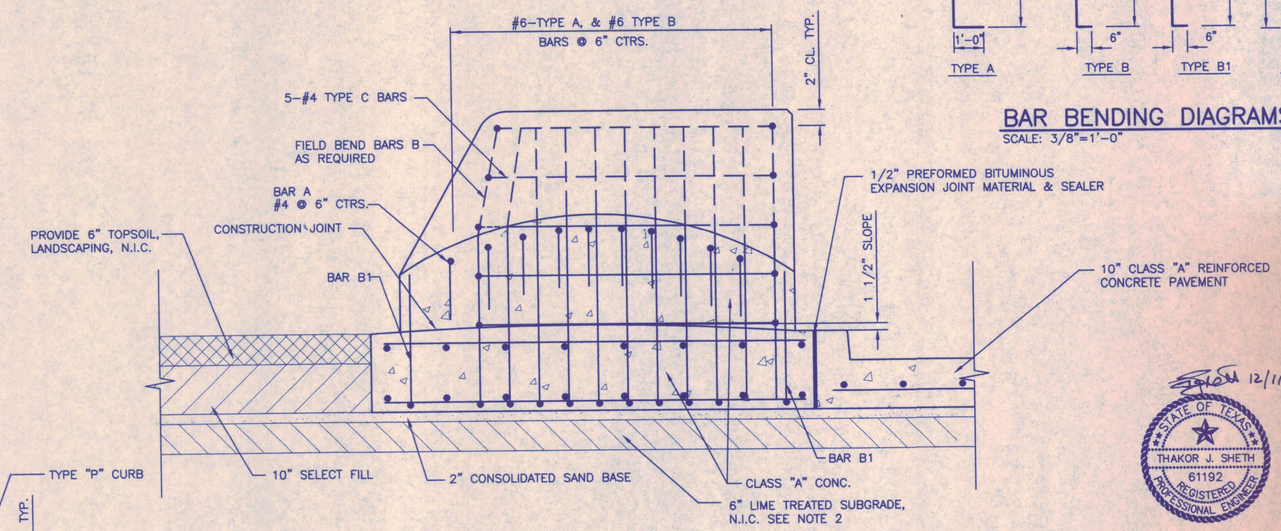

4 / — SECTION
SCALE: 3/4"=1'-0"

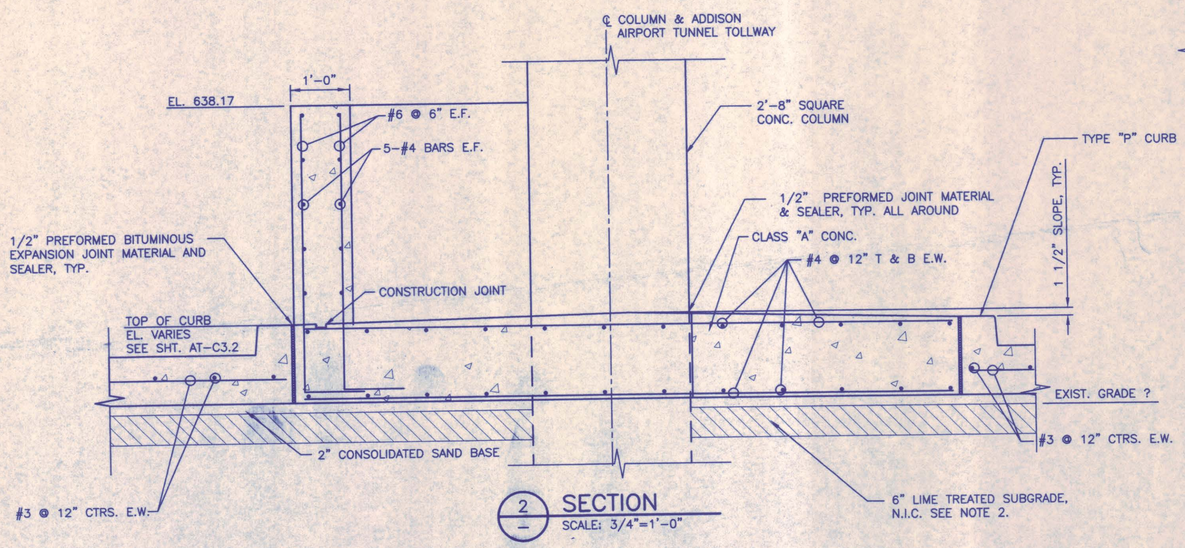

2 / — SECTION
SCALE: 3/4"=1'-0"

NOTES:

1. SEE GENERAL NOTE SHEET AT-C1.1
2. THE LIME TREADED SUBGRADE WITHIN AND ADJACENT TO THE TOLL PLAZA CONSTRUCTION LIMITS HAS PREVIOUSLY BEEN LIME TREATED AND STABILIZED BY OTHERS. IF THAT LIME STABILIZED SUBGRADE SUBSEQUENTLY IS DAMAGED BY THE CONTRACTOR'S CONSTRUCTION OPERATIONS, THE SUBGRADE SHALL BE REPAIRED WITH AVAILABLE STOCKPILED LIME TRIMMINGS OR LIME SLURRY AS DIRECTED BY THE ENGINEER.

Chiang, Patel & Yerby, Inc.
Consulting Engineers • Planners • Project Managers
Dallas • Fort Worth • Houston • San Antonio

AT-C9.2

12/11/97
STATE OF TEXAS
THAKOR J. SHETH
61192
REGISTERED PROFESSIONAL ENGINEER

NO.	REVISION	BY	DATE

NORTH TEXAS TOLLWAY AUTHORITY
ADDISON AIRPORT TUNNEL

CONCRETE CRASH BUNKER
DETAIL AND SECTIONS

AGUIRRE ASSOCIATES INC
12700 PARK CENTRAL DRIVE
15 TH FLOOR
DALLAS TEXAS 75251
TEL (972) 788-1508

SECTION XIII

DRAWN MM DATE 8/28/97 DESIGNED MM DATE 12/20/96
CHECKED TJS DATE 11/5/97 SCALE AS SHOWN

CONTRACT NO. DNT-290 SHEET 19 OF 53

133411M AT-C92.DWG

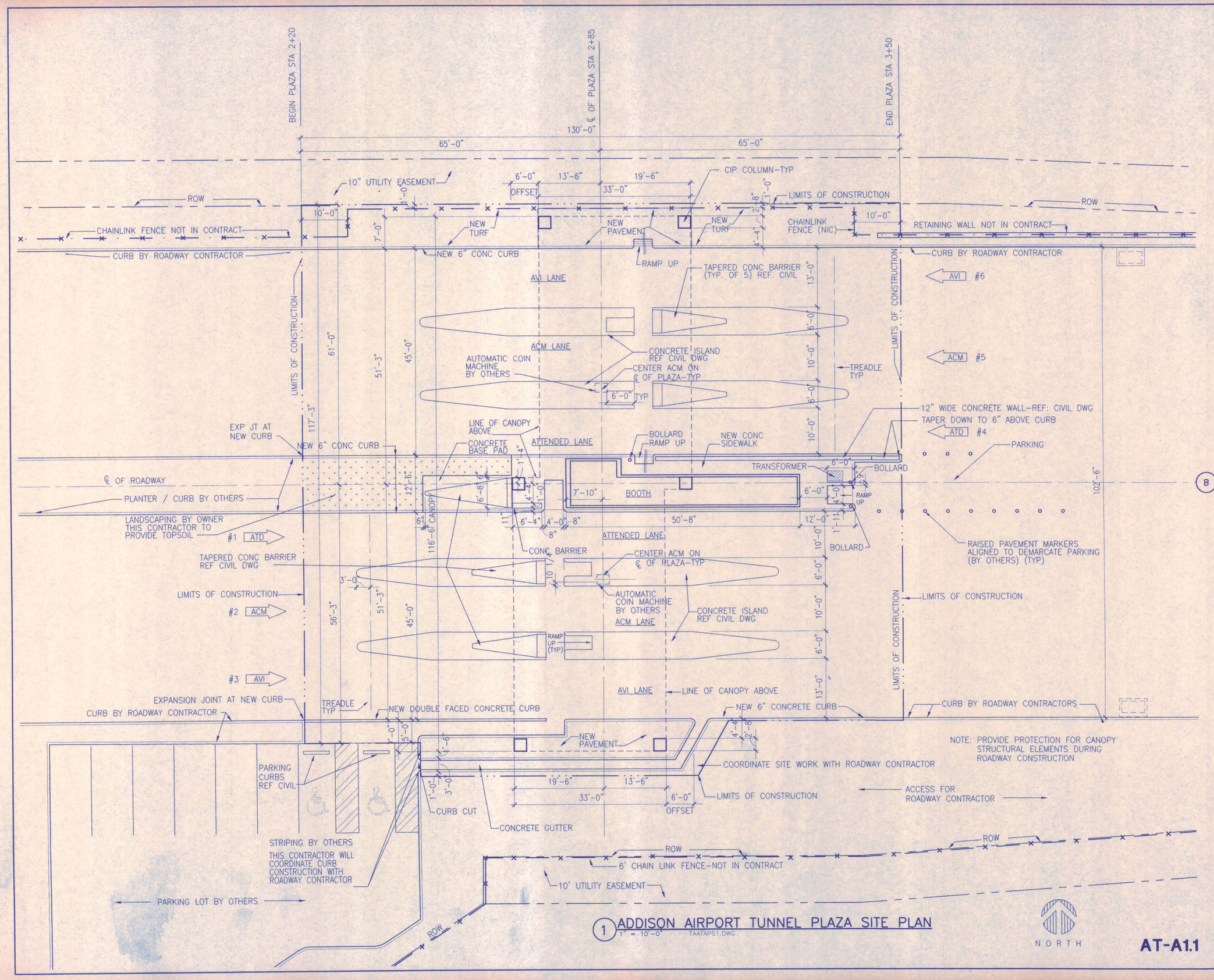

1 ADDISON AIRPORT TUNNEL PLAZA SITE PLAN
1" = 10'-0" TAATAPS1.DWG

AT-A1.1

GENERAL NOTES

1. REFER TO CIVIL DRAWINGS FOR DIMENSIONED PLANS, GRADES, UTILITY LOCATIONS AND SITE DETAILS.
2. SITE ELECTRICAL LOCATIONS ARE SHOWN ON ELECTRICAL SITE PLAN.
3. BOOTH TRANSACTION AREA FINISH FLOOR ELEVATION AT 634.33 FEET ABOVE MEAN SEA LEVEL AND EQUAL TO DATUM ELEVATION OF 100'-0".
4. REFER TO ARCHITECTURAL DRAWING SHEET AT-A2.1 FOR BOTH BUILDING PLANS.

LANE DESIGNATION KEY

XXX #N
LANE TYPE
LANE NUMBER
TRAFFIC DIRECION

LANE TYPES:

AVI - AUTOMATIC VEHICLE ID (TOLLTAG®)
ACM - AUTOMATIC COIN MACHINE
ATD - ATTENDED LANE

REGISTERED ARCHITECT STEPHEN OWEN HALL 2815 STATE OF TEXAS

NO.	REVISION	BY	DATE

NORTH TEXAS TOLLWAY AUTHORITY

ADDISON AIRPORT TUNNEL BARRIER TOLL PLAZA

TUNNEL PLAZA SITE PLAN

AGUIRRE Incorporation
12700 PARK CENTRAL DRIVE
15 TH FLOOR
DALLAS TEXAS 75251
TEL. (972) 788-1008

SECTION XIII

CHECKED DATE 12/18/97
CHECKED DATE 12/18/97
DESIGNED MM DATE 8/15/96
SCALE 1"=1'-0"

CONTRACT NO. DNT-290 SHEET 20 OF 53

H:\aai-proj\9603-01\DWG\ADDISON\TAAT_A11.dwg
Wed Dec 10 13:48:45 1997

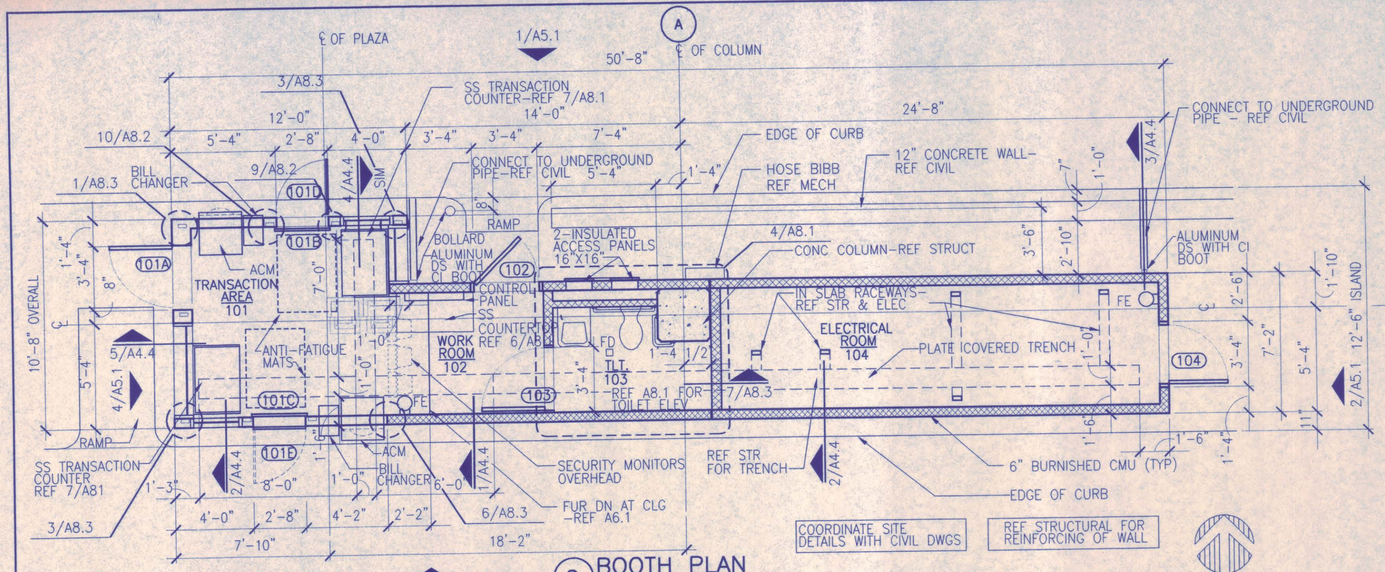

2 BOOTH PLAN
1/4"=1'-0" TAATAPN2

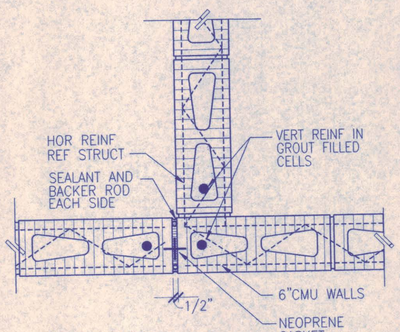

5 DETAIL
1 1/2"=1'-0" TAATAD03

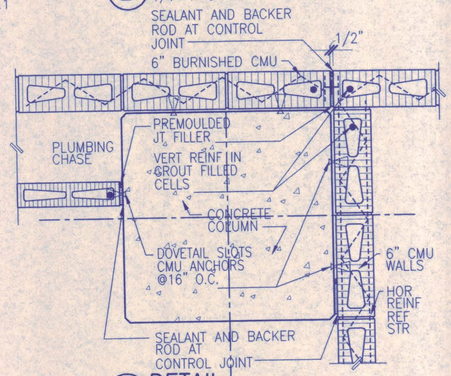

4 DETAIL
1"=1'-0" TAATAD04

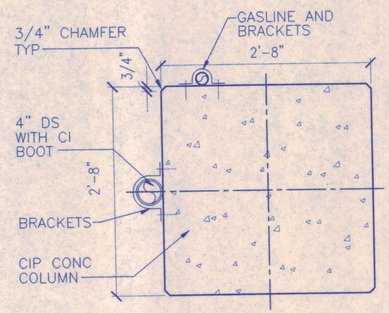

3 DETAIL
1"=1'-0" TAATAD05

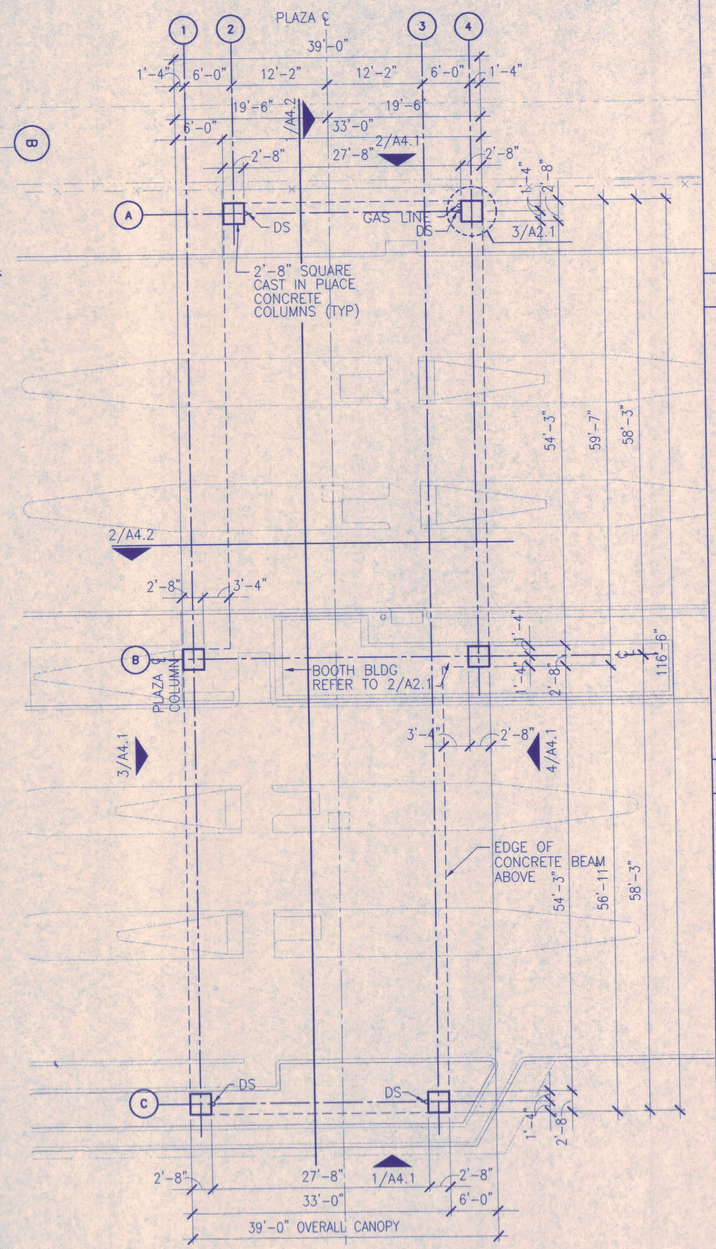

1 CANOPY PLAN
1" = 10'-0" TAATAPS1.DWG

GENERAL NOTES

1 ALL DIMENSIONS ARE TO FACE OF FINISH UNO

2 REFER TO STRUCTURAL FOR SLAB AND FRAMING COORDINATION

3 ELECTRICAL ROOM EQUIPMENT IS SHOWN ON ELECTRICAL DRAWINGS

4 COORDINATE SITE WORK WITH CIVIL DRAWINGS

5 VERIFY BOOTH FINISH FLOOR ELEVATION W/ CIVIL DRAWINGS

6 ALL EXPOSED PRECAST SPANDREL AND BOX BEAMS TO RECEIVE SANDBLAST FINISH AND SEALER

7 DO NOT SANDBLAST PRECAST CONCRETE TEE MEMBERS

LEGEND

KEY TO DOOR/ ROOM SCHEDULES

DOOR AND FRAME MATERIAL:
PHM - PAINTED HOLLOW METAL
SS - STAINLESS STEEL

DOOR GLAZING
G1 - 1/4" SAFETY GLASS

ROOM FINISHES

FLOORS:
F1 - SEALED CONCRETE

BASE:
B1 - VINYL BASE
B3 - NO BASE

WALLS:
W1 - PAINTED
W2 - UNFINISHED

CEILINGS:
C1 - 2 x 2 LAY-IN ACOUSTIC
C2 - EXPOSED STRUCTURE

SCHEDULE NOTES

1- FRP WALL COVERING ABOVE CMU ON METAL STUD / GYP BOARD AREAS DO NOT INSTALL ON FURRDOWN

DOOR TYPES

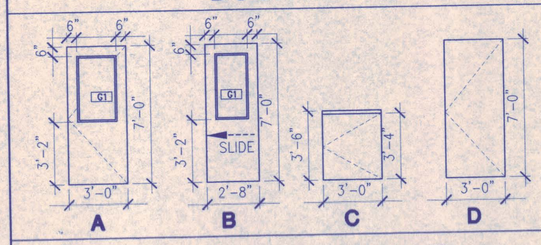

FRAME TYPES

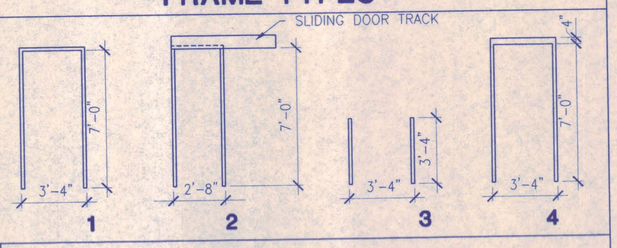

DOOR SCHEDULE

MARK	TYPE	THICKNESS	MATERIAL	SIZE	GLAZING	FRAME TYPE	FRAME MAT'L	HARDWARE	FIRE RATING	REMARKS
101A	A	1 3/4"	PHM	3'-0"x7'-0"	G1	1	PHM	SET 1	-	
101B	B	1 3/8"	SS	3'-0"x7'-0"	G1	2	SS	SET 2	-	SLIDING DOOR
101C	B	1 3/8"	SS	3'-0"x7'-0"	G1	2	SS	SET 2	-	SLIDING DOOR
101D	C	1 3/8"	SS	3'-0"x3'-4"	-	3	SS	SET 3	-	DUTCH DOOR
101E	C	1 3/8"	SS	3'-0"x3'-4"	-	3	SS	SET 3	-	DUTCH DOOR
102	A	1 3/4"	PHM	3'-0"x7'-0"	G1	4	PHM	SET 1	-	
103	D	1 3/4"	PHM	3'-0"x7'-0"	-	4	PHM	SET 4	-	
104	D	1 3/4"	PHM	3'-0"x7'-0"	-	4	PHM	SET 5	-	

ROOM FINISH SCHEDULE

NUMBER	RM NAME	FLOOR	BASE	WALLS NORTH	WALLS EAST	WALLS SOUTH	WALLS WEST	CEILING	CLG HT AFF	NOTES
101	TRANSACTION	F1	B1	W1	W1	W1	W1	C1	9'-6"	1
102	WORKROOM	F1	B1	W1	W1	W1	-	C1	8'-0"	1
103	TOILET	F1	B1	W1	W1	W1	W1	C1	8'-0"	
104	ELECTRICAL	F1	B3	W2	W2	W2	W2	C2	-	

NOTE: REFER TO ELEVATIONS 1, 2, 4 AND 5 ON SHEET AT-A5.1 FOR DOOR HEAD, JAMB AND SILL DETAIL REFERENCES, AND SHEET AT-A8.2 FOR DOOR DETAILS.

NOTE: SEE LEGEND FOR KEY TO INFORMATION ON SCHEDULES

NO.	REVISION	BY	DATE

NORTH TEXAS TOLLWAY AUTHORITY
ADDISON AIRPORT TUNNEL BARRIER TOLL PLAZA

CANOPY PLAN, BOOTH PLAN, SCHEDULES AND DETAILS

AGUIRRE corporation
12700 PARK CENTRAL DRIVE
15 TH FLOOR
DALLAS TEXAS 75251
TEL (972) 788-1508

SECTION XIII

CHECKED DATE 12/18/97
CHECKED DATE 12/18/97
DESIGNED MM DATE 8/15/96
SCALE AS SHOWN
CONTRACT NO. DNT-290 SHEET 21 OF 53

AT-A2.1

H:\aai-proj\9603-01\DWG\ADDISON\TAAT_A21.dwg
Wed Dec 10 13:26:10 1997

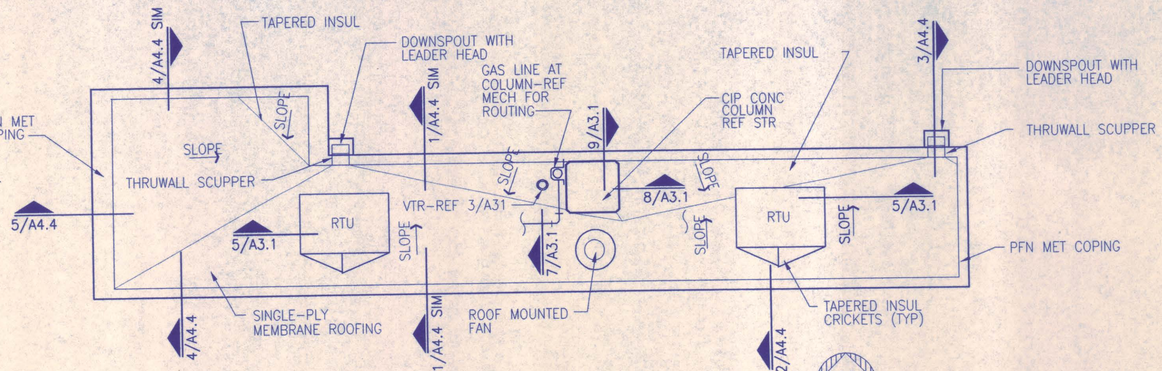

2 BOOTH ROOF PLAN
1/4"=1'-0" TAATAPR2.DWG

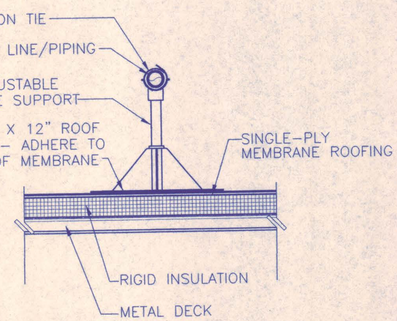

7 PIPE SUPPORT DETAIL @ BOOTH
1 1/2"=1'-0" TAATAD19

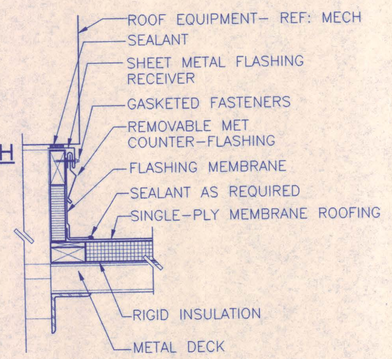

5 ROOF CURB DETAIL @ BOOTH
1 1/2"=1'-0" TAATAD12

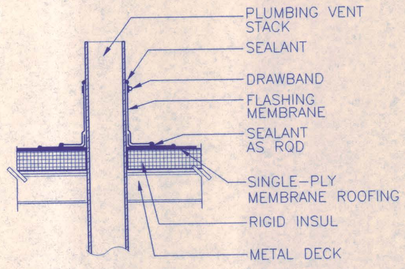

3 ROOF PENETRATION DETAIL @ BOOTH
1 1/2"=1'-0" TAATAD11

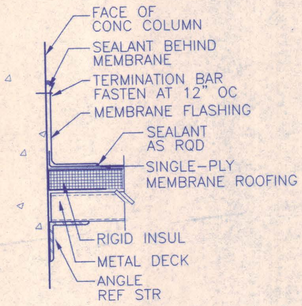

8 FLASHING @ COLUMN
1 1/2"=1'-0" TAATAD43

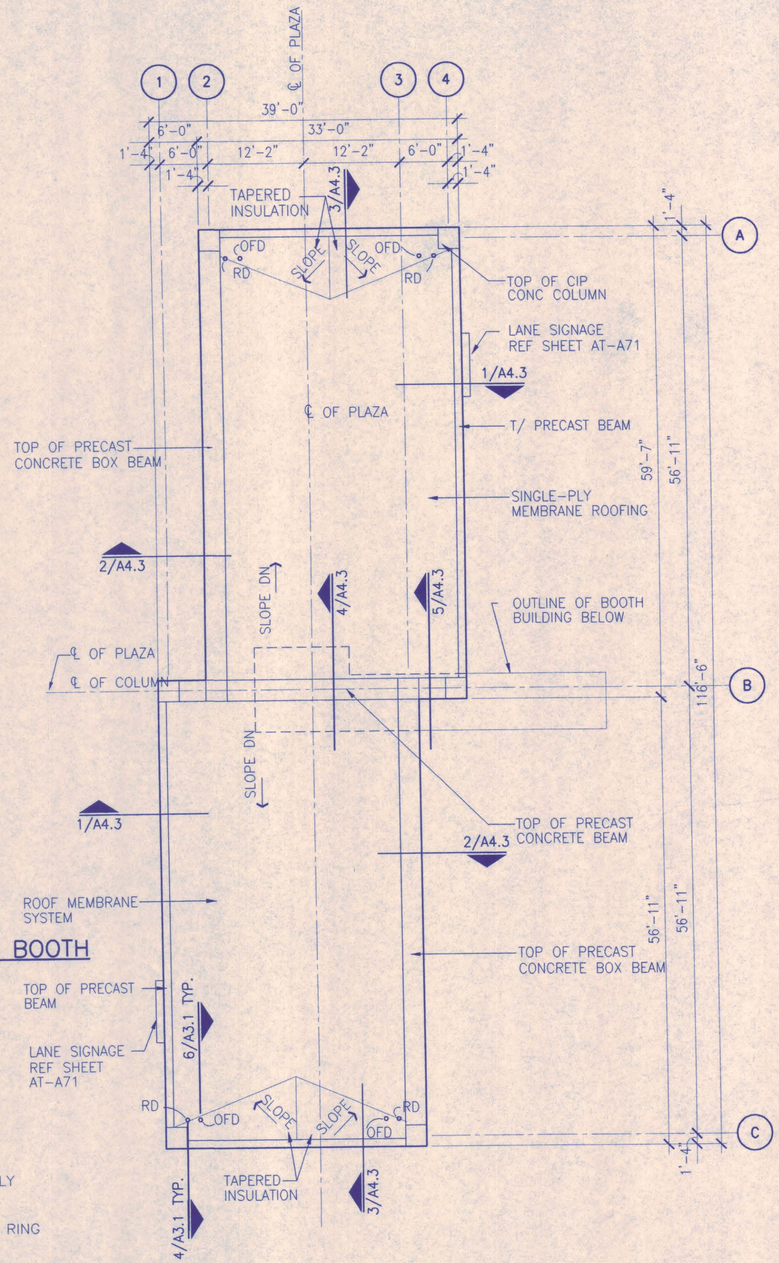

1 CANOPY ROOF PLAN
1/8"=1'-0" TAATAPR1.DWG

NORTH

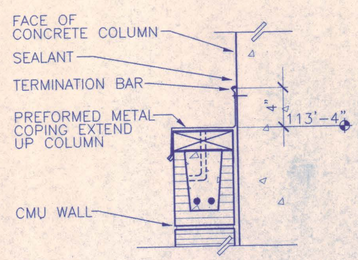

9 FLASHING DETAIL
1 1/2"=1'-0" TAATAD44

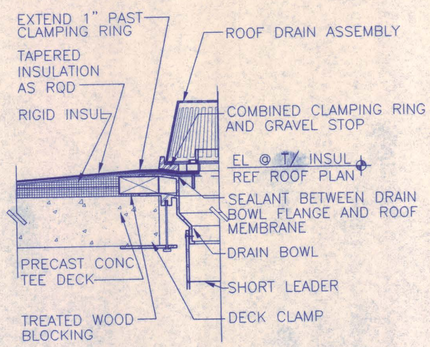

6 OVERFLOW DRAIN DETAIL
1 1/2"=1'-0" TAATAD18.DWG

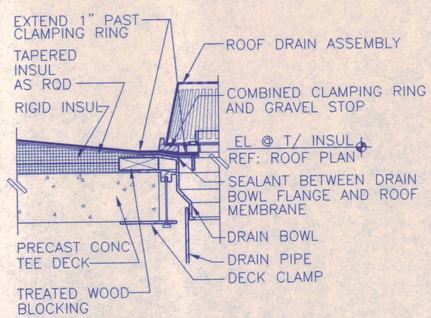

4 ROOF DRAIN DETAIL
1 1/2"=1'-0" TAATAD15.DWG

AT-A3.1

NO.	REVISION	BY	DATE

NORTH TEXAS TOLLWAY AUTHORITY

ADDISON AIRPORT TUNNEL BARRIER TOLL PLAZA

TUNNEL PLAZA CANOPY ROOF PLAN

AGUIRRE corporation
12700 PARK CENTRAL DRIVE
16 TH FLOOR
DALLAS TEXAS 75251
TEL (972) 788-1008

SECTION XIII

CHECKED DATE 12/18/97
CHECKED DATE 12/18/97
DESIGNED MM DATE 8/15/96
SCALE AS SHOWN

CONTRACT NO. DNT-290 SHEET 22 OF 53

H:\aar-proj\9603-01\DWG\ADDISON\TAAT_A31.dwg
Wed Dec 10 13:27:27 1997

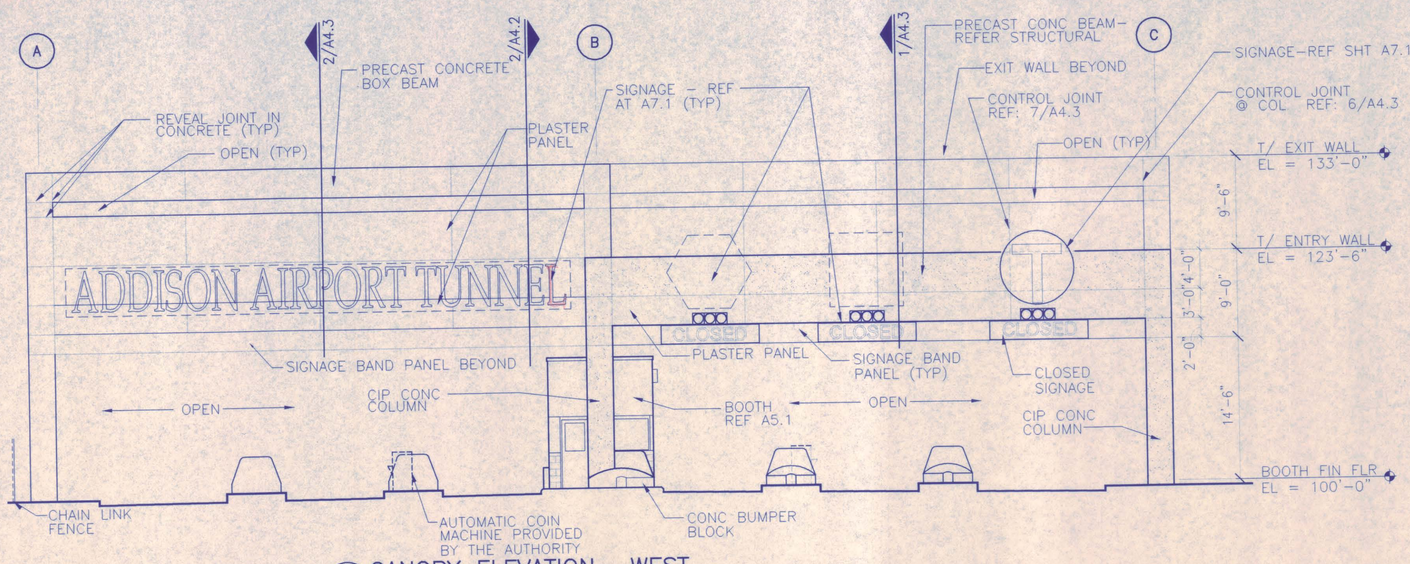

3 CANOPY ELEVATION– WEST
1/8"=1'-0"

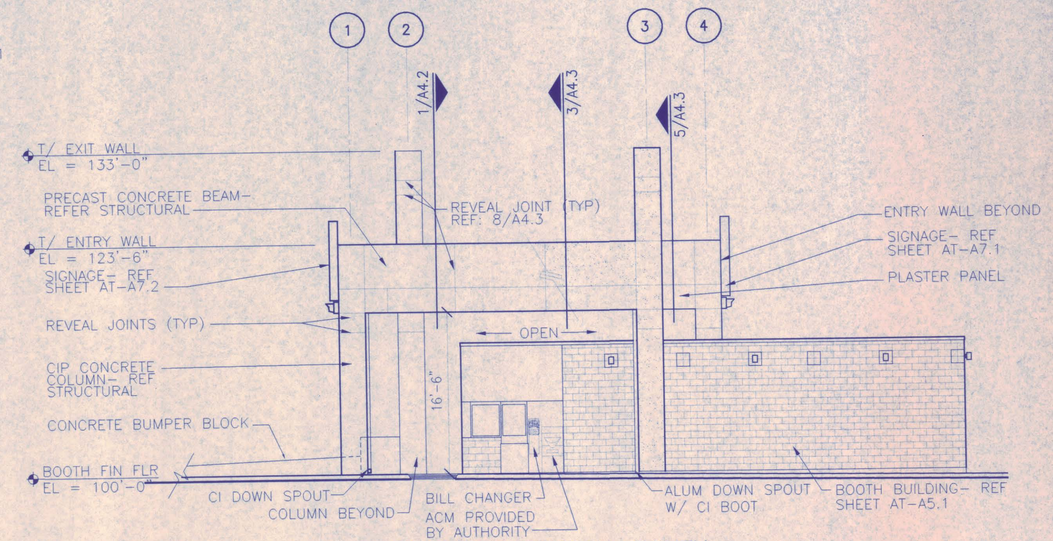

1 CANOPY ELEVATION–SOUTH
1/8"=1'-0"

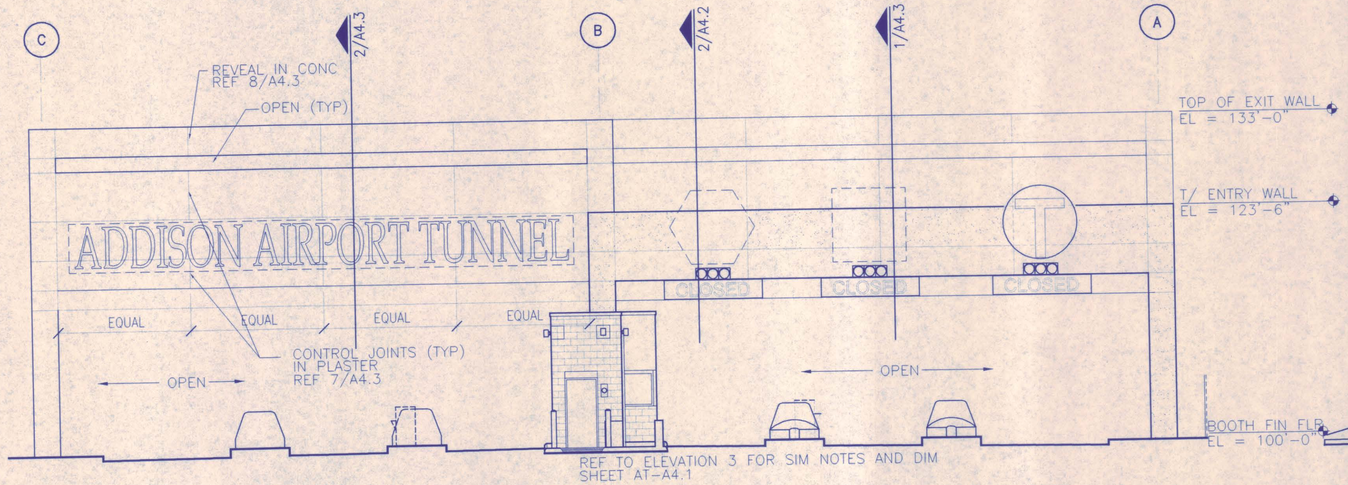

4 CANOPY ELEVATION–EAST
1/8"=1'-0"

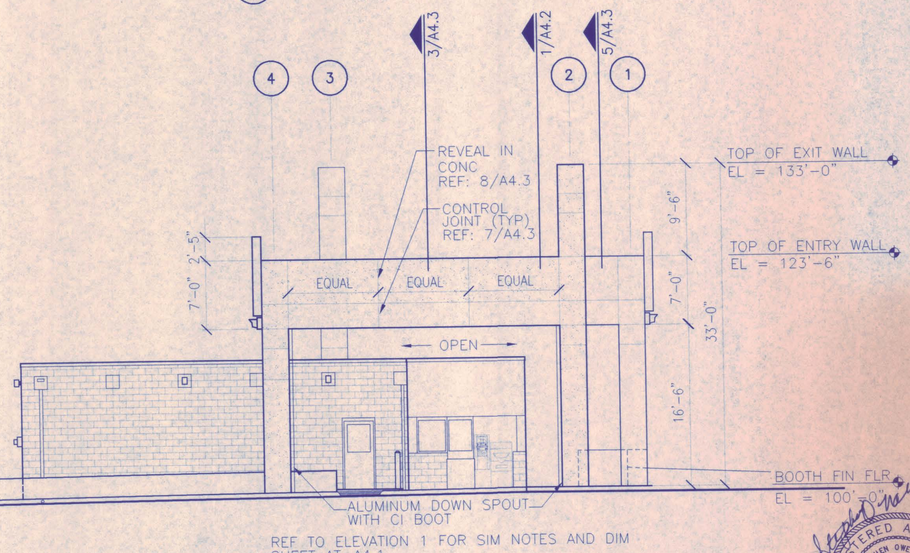

2 CANOPY ELEVATION–NORTH
1/8"=1'-0"

GENERAL NOTES:

1. ALL EXPOSED CAST IN PLACE CONCRETE COLUMNS TO RECEIVE SAND BLAST FINISH AND SEALER.
2. ALL EXPOSED PRE-CAST SPANDREL AND BOX BEAMS TO RECEIVE SAND BLAST FINISH AND SEALER.
2. DO NOT SANDBLAST PRECAST CONC TEE MEMBERS

REGISTERED ARCHITECT STEPHEN OWEN NALL 2815 STATE OF TEXAS

12/18/97

NO.	REVISION	BY	DATE

NORTH TEXAS TOLLWAY AUTHORITY

ADDISON AIRPORT TUNNEL BARRIER TOLL PLAZA

TUNNEL PLAZA CANOPY ELEVATIONS

AGUIRRE Corporation
5700 PARK CENTRAL DRIVE
15 TH FLOOR
DALLAS TEXAS 75251
TEL (972) 788-1008

SECTION XIII

CHECKED DATE 12/18/97 DESIGNED MM DATE 8/15/96

CHECKED DATE 12/18/97 SCALE 1/8"=1'-0"

CONTRACT NO. DNT-290 SHEET 23 OF 53

AT-A4.1

H:\aai-proj\9603-01\dwg\ADDISON\TAAT_A41.dwg
Tue Dec 16 14:57:00 1997

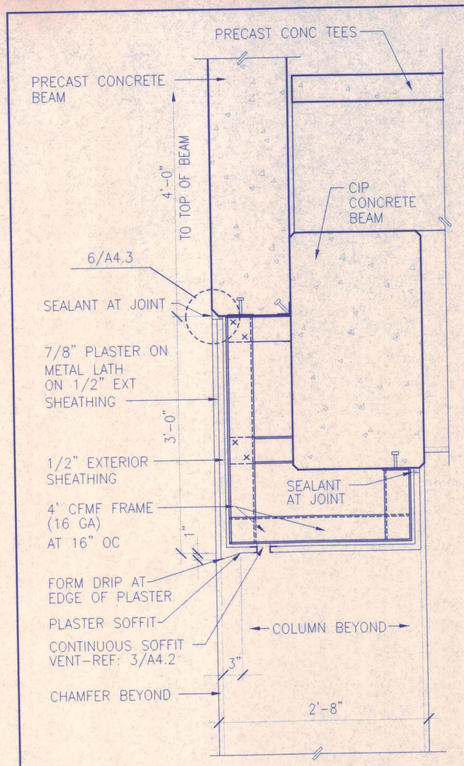

7 SECTION AT SIDE WALL
1"=1'-0"

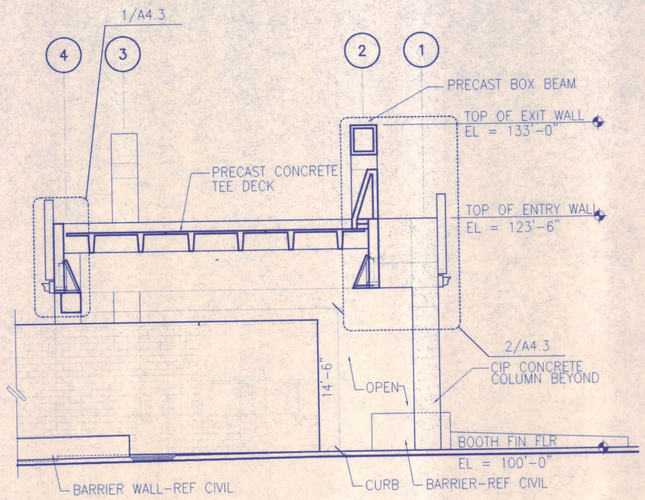

2 CANOPY SECTION
1/8"=1'-0"

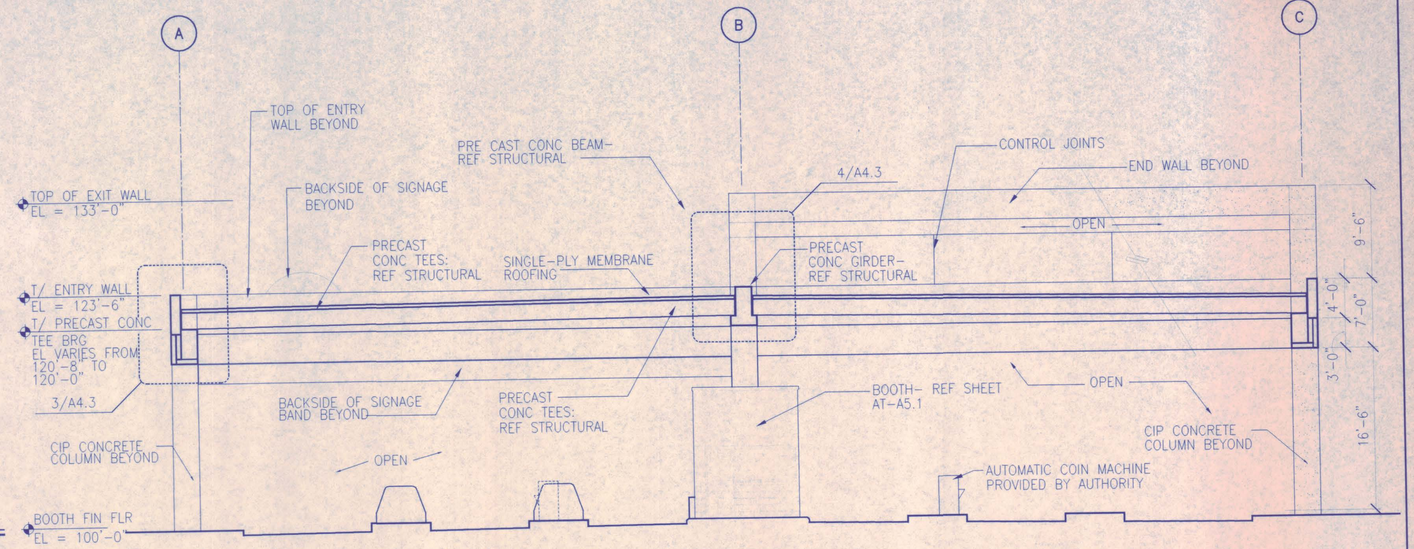

1 CANOPY SECTION
1/8"=1'-0"

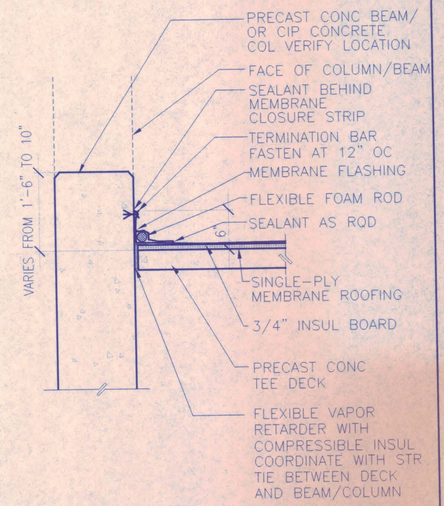

6 ROOF FLASHING DETAIL
1"=1'-0"

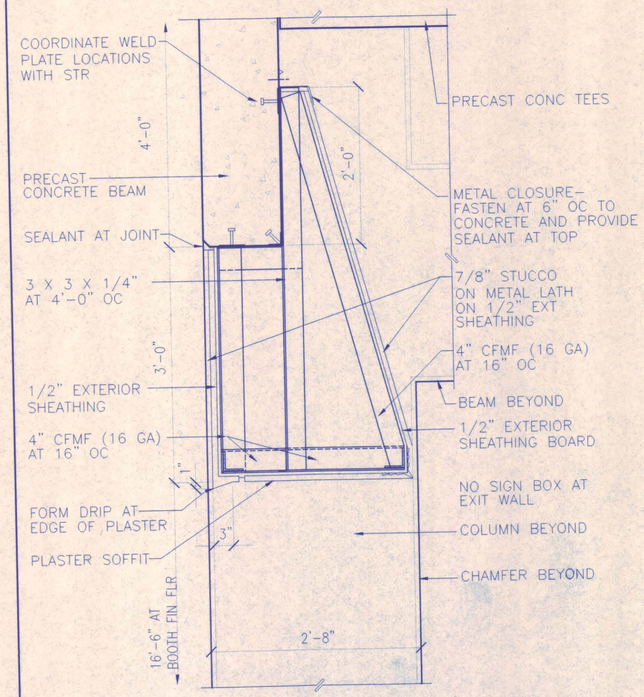

5 SECTION AT EXIT WALL
1"=1'-0"

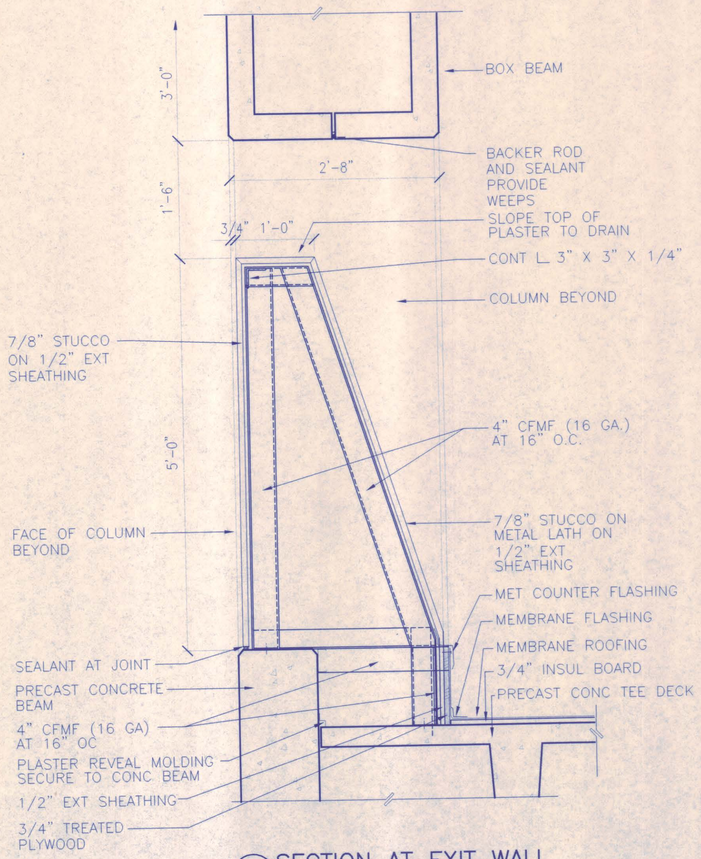

4 SECTION AT EXIT WALL
1"=1'-0"

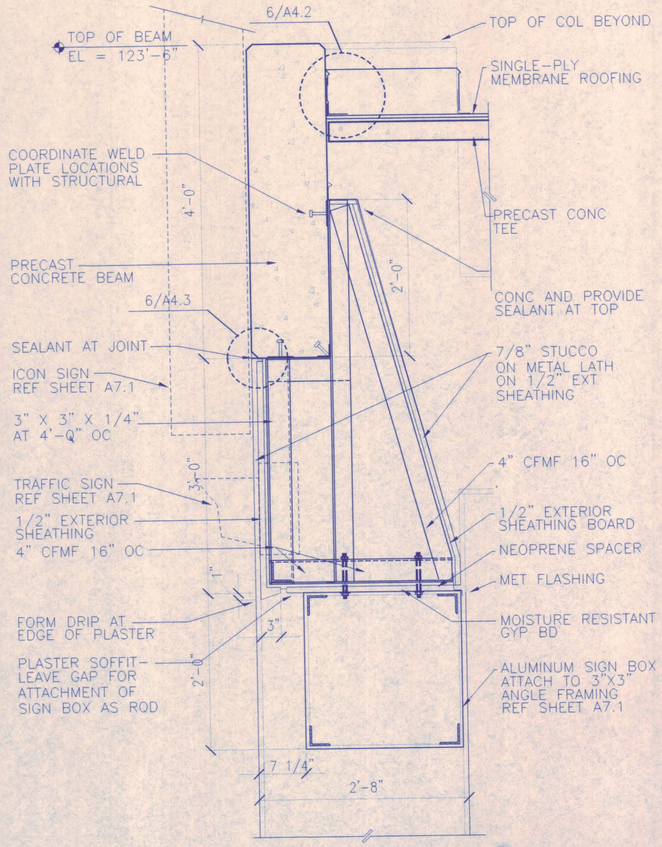

3 SECTION AT ENTRY WALL
1"=1'-0"

AT-A4.2

REGISTERED ARCHITECT STEPHEN OWEN HALL 2815 STATE OF TEXAS
12/18/97

NO.	REVISION	BY	DATE

NORTH TEXAS TOLLWAY AUTHORITY

ADDISON AIRPORT TUNNEL BARRIER TOLL PLAZA

TUNNEL PLAZA
CANOPY SECTIONS

AGUIRRE Corporation
12700 PARK CENTRAL DRIVE
16 TH FLOOR
DALLAS TEXAS 75251
TEL (972) 788-1508

SECTION XIII

CHECKED DATE 12/18/97 DESIGNED MM DATE 8/15/96
CHECKED DATE 12/18/97 SCALE AS SHOWN
CONTRACT NO. DNT-290 SHEET 24 OF 53

H:\aai-proj\9603-01\dwg\ADDISON\TAAT_A42.dwg
Tue Dec 16 14:58:18 1997

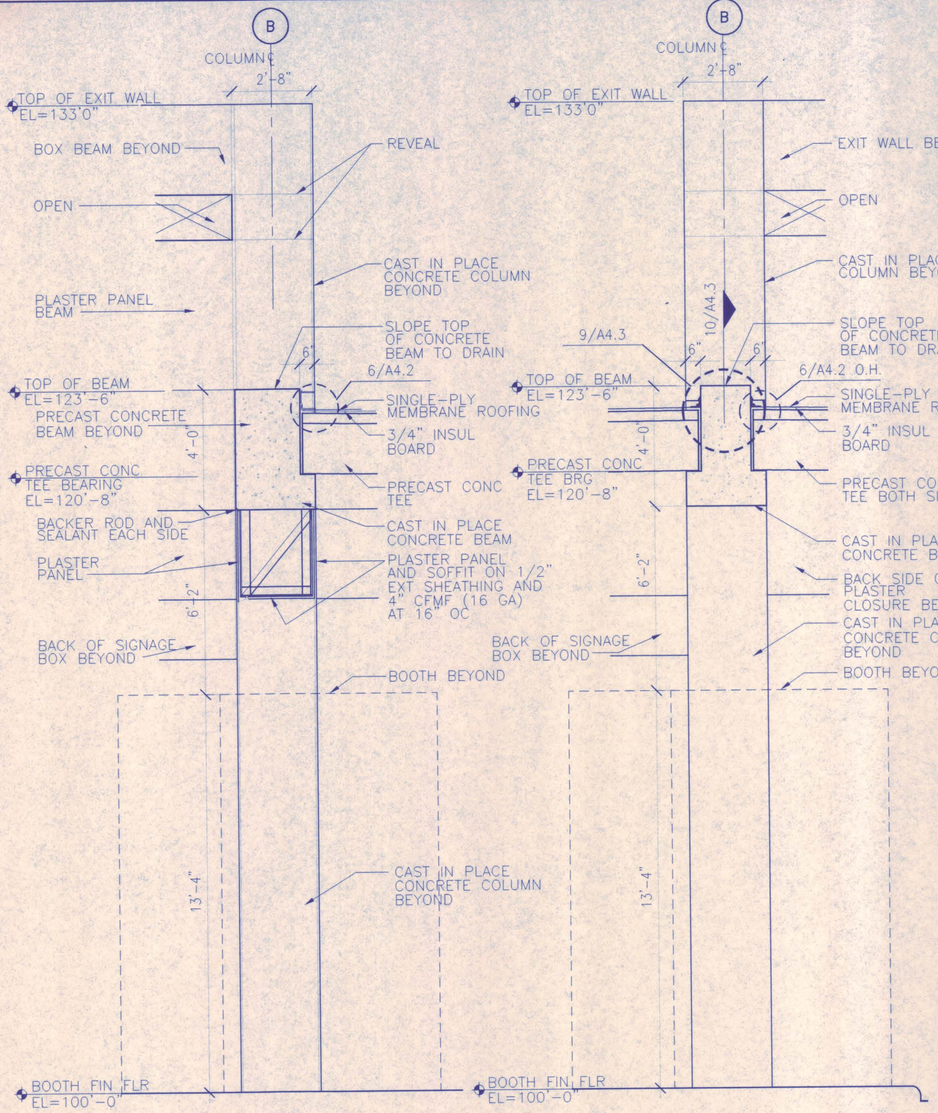

5 CANOPY SECTION–TRANSITION WALL
3/8"=1'-0"

4 CANOPY SECTION–MID BEAM
3/8"=1'-0"

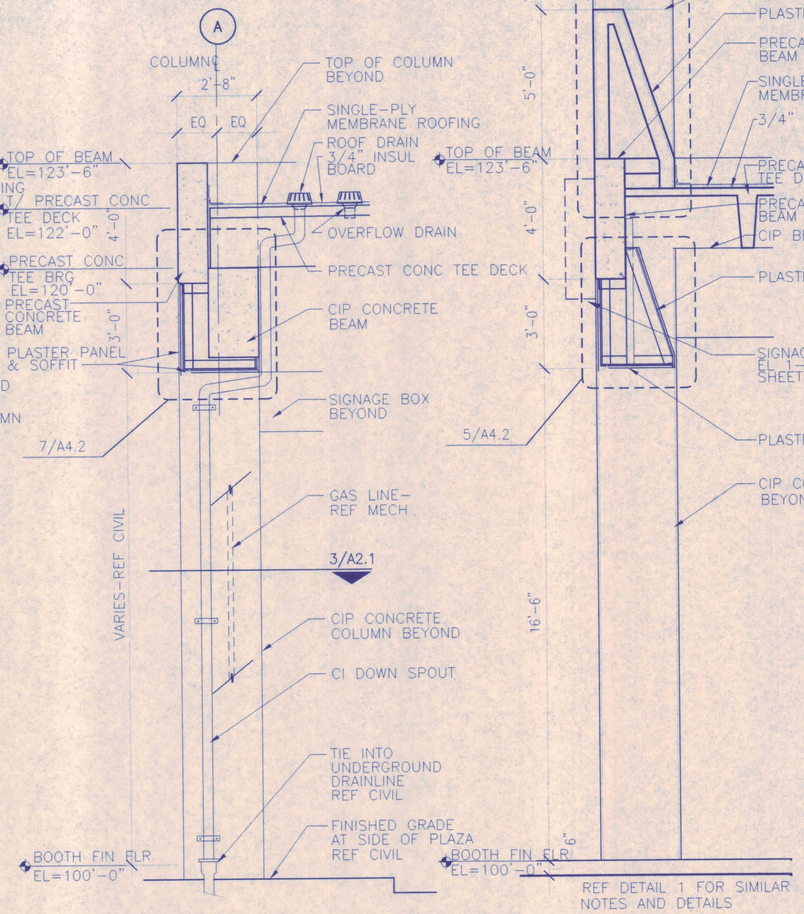

3 CANOPY SECTION–SIDE WALL
3/8"=1'-0"

2 CANOPY SECTION–EXIT WALL
3/8"=1'-0"

GENERAL NOTES

1. ALL EXPOSED CAST IN PLACE CONCRETE COLUMNS TO RECEIVE SANDBLAST FINISH AND SEALER.
2. ALL EXPOSED PRECAST SPANDREL AND BOX BEAMS TO RECEIVE SANDBLAST FINISH AND SEALER.

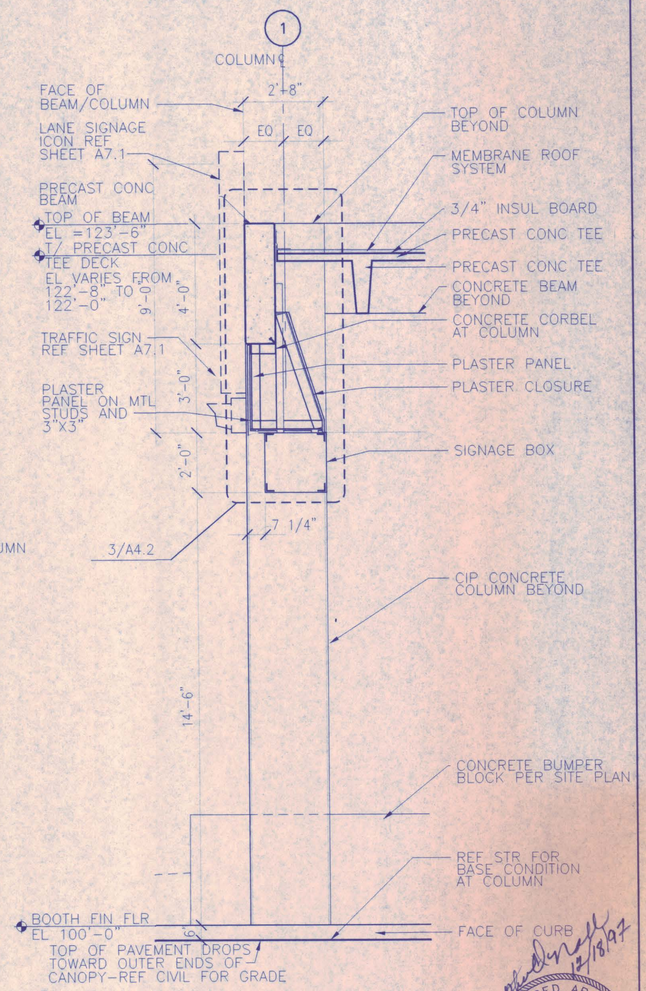

1 CANOPY SECTION–ENTRY WALL
3/8"=1'-0"

12/18/97

REGISTERED ARCHITECT STEPHEN OWEN HALL 2815 STATE OF TEXAS

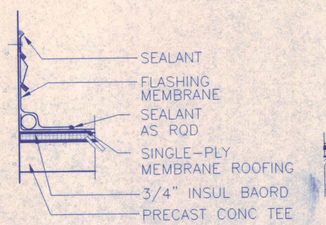

10 FLASHING @ COLUMN
1 1/2" = 1'-0"

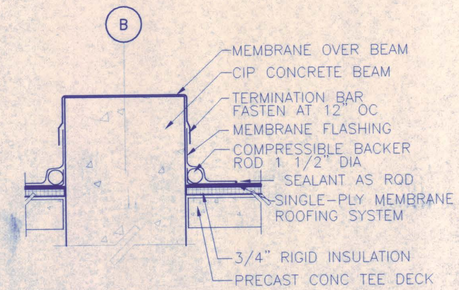

9 MEMBRANE @ BEAM
1 1/2" = 1'-0"

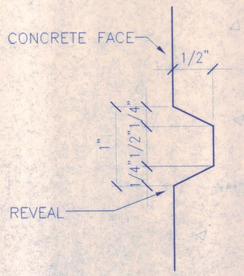

8 REVEAL AT CONCRETE
FULLSIZE

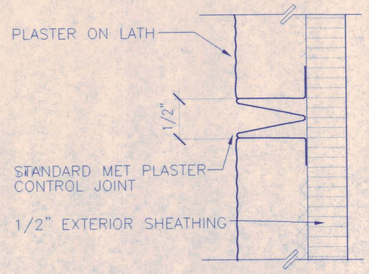

7 CONTROL JT AT PLASTER
FULLSIZE

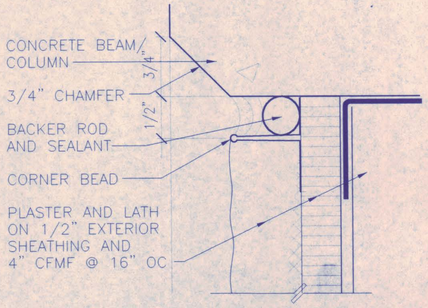

6 DETAIL AT JOINT
FULLSIZE

AT-A4.3

NO.	REVISION	BY	DATE

NORTH TEXAS TOLLWAY AUTHORITY

ADDISON AIRPORT TUNNEL BARRIER TOLL PLAZA

TUNNEL PLAZA CANOPY WALL SECTIONS

AGUIRRE Corporation
12700 PARK CENTRAL DRIVE
16 TH FLOOR
DALLAS TEXAS 75251
TEL (972) 788-1008

SECTION XIII

CHECKED MM DATE 12/18/97
CHECKED DATE 12/18/97
DESIGNED MM DATE 8/15/96
SCALE AS SHOWN
CONTRACT NO. DNT-290 SHEET 25 OF 53

H:\aai-proj\9603-01\dwg\ADDISON\TAAT_A43.dwg
Tue Dec 16 14:59:38 1997

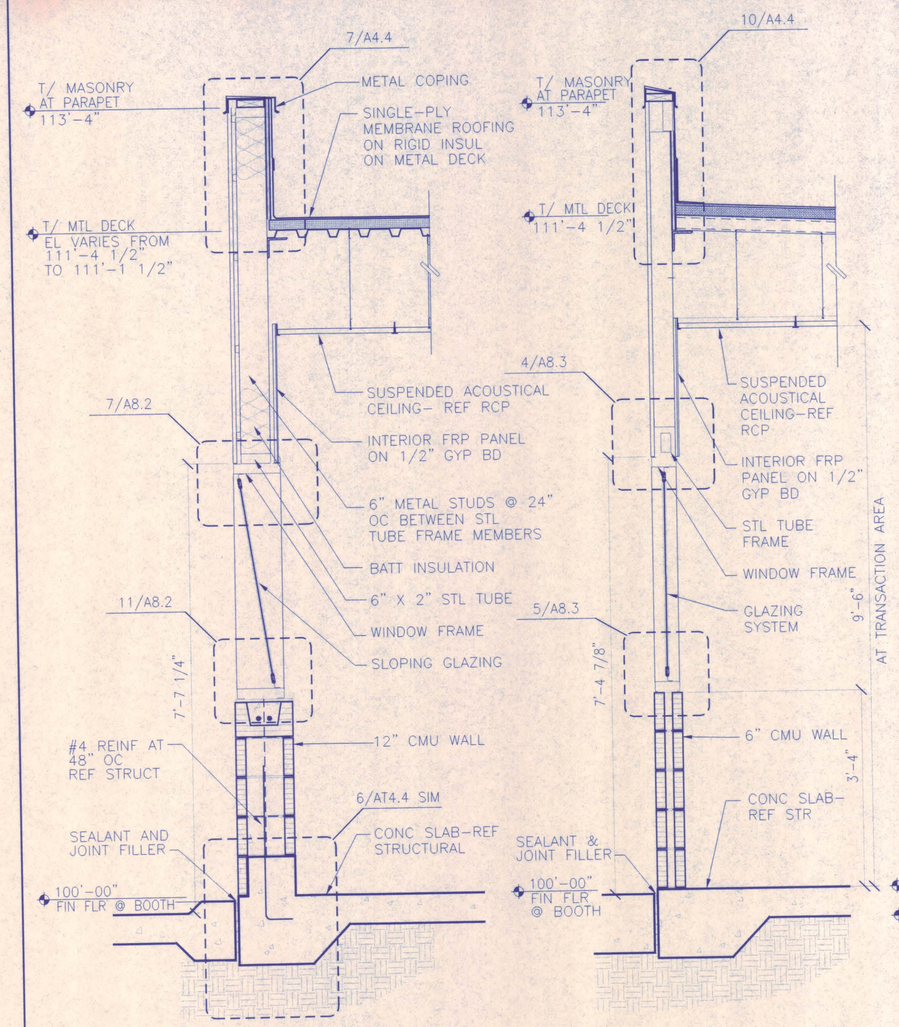

5 WALL SECTION–TRANSACTION
3/4"=1'-0"

4 WALL SECTION–TRANSACTION
3/4"=1'-0"

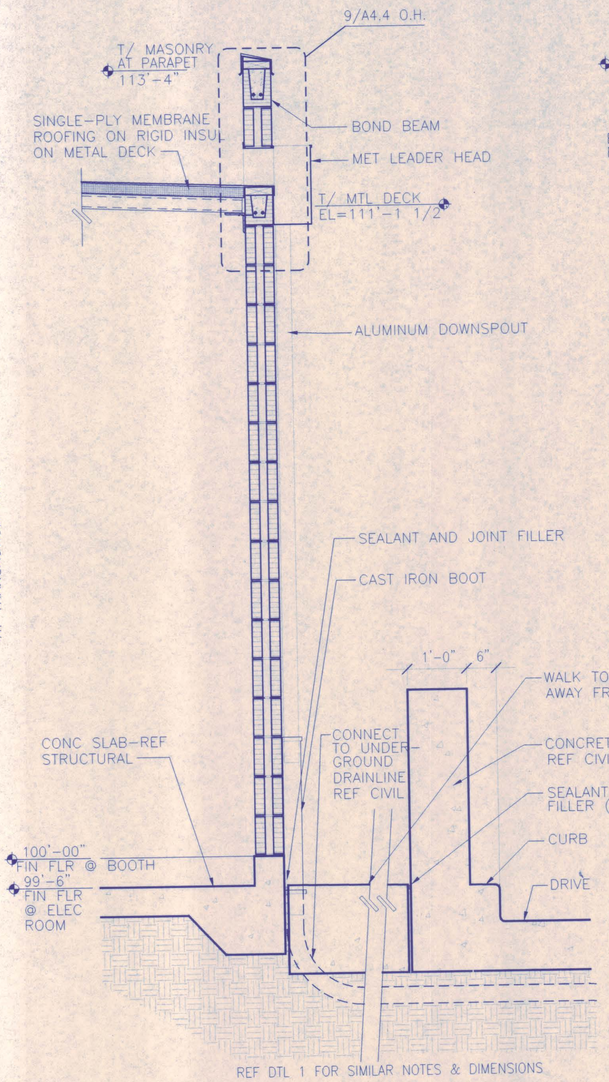

3 WALL SECTION–ELECTRICAL ROOM
3/4"=1'-0"

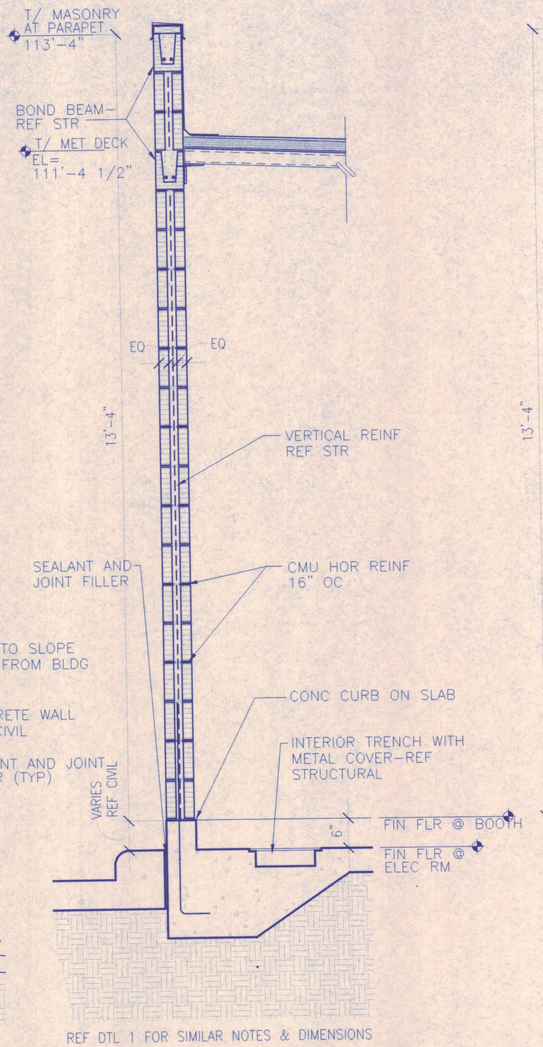

2 WALL SECTION–ELECTRICAL ROOM
3/4"=1'-0"

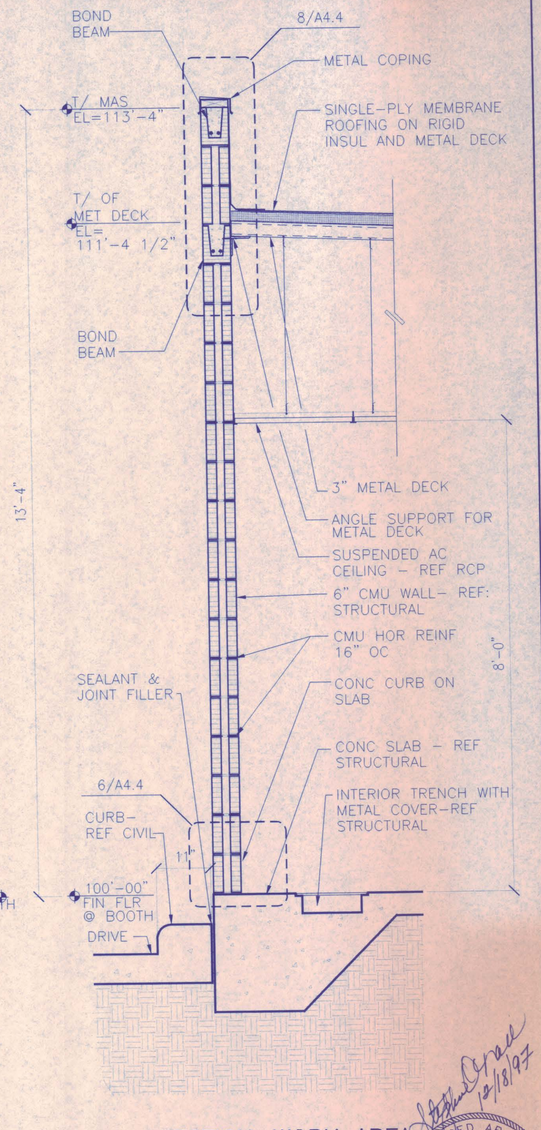

1 WALL SECTION–WORK AREA
3/4"=1'-0"

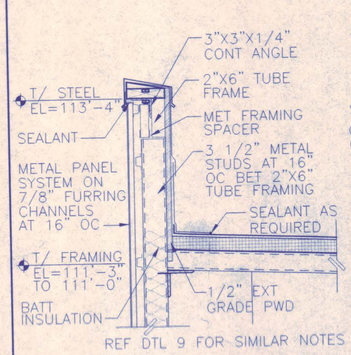

10 SECTION AT SIDE WALL
1"=1'-0"

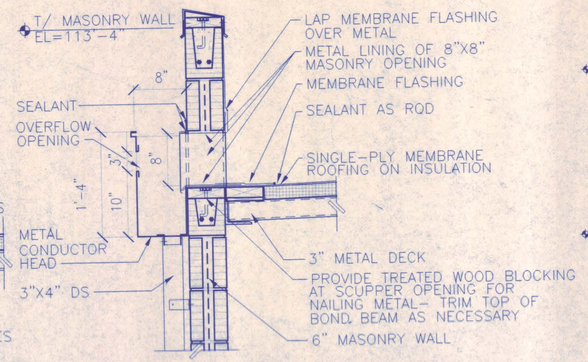

9 SCUPPER DETAIL
1"=1'-0"

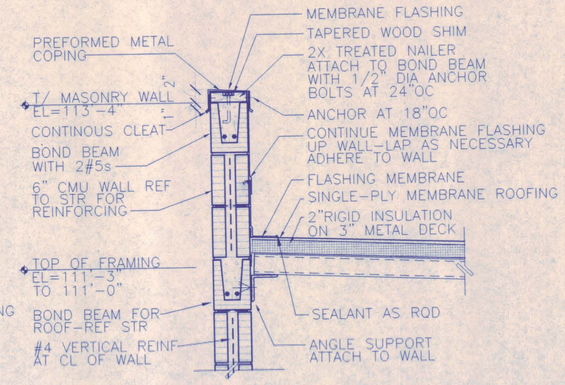

8 TYP PARAPET DETAIL
1"=1'-0"

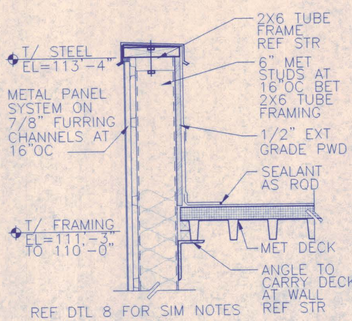

7 SECTION AT FRONT WALL
1"=1'-0"

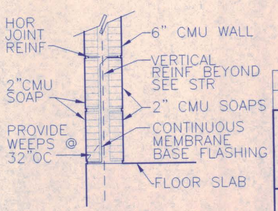

6 DETAIL
1"=1'-0"

NO.	REVISION	BY	DATE

NORTH TEXAS TOLLWAY AUTHORITY

ADDISON AIRPORT TUNNEL BARRIER TOLL PLAZA

TUNNEL PLAZA BOOTH WALL SECTIONS

AGUIRREcorporation
15700 PARK CENTRAL DRIVE
16 TH FLOOR
DALLAS TEXAS 75281
TEL (972) 788-9006

SECTION XIII

CHECKED DATE 12/18/97 DESIGNED MM DATE 8/15/96
CHECKED DATE 12/18/97 SCALE AS SHOWN
CONTRACT NO. DNT-290 SHEET 26 OF 53

AT-A4.4

REGISTERED ARCHITECT STEPHEN OWEN WALL 2815 STATE OF TEXAS
12/18/97

H:\aai-proj\9603-01\dwg\ADDISON\TAAT_A44.dwg
Tue Dec 16 15:24:47 1997

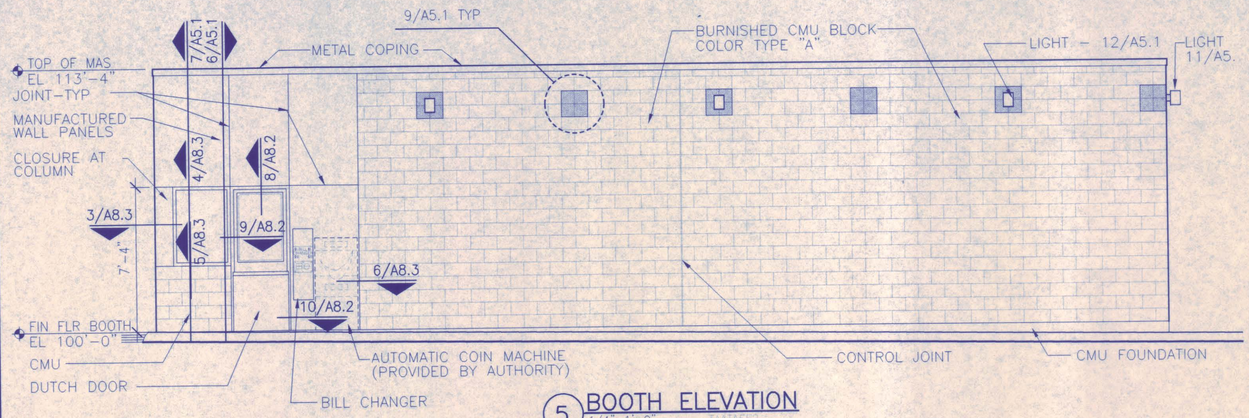

5 BOOTH ELEVATION
1/4"=1'-0"

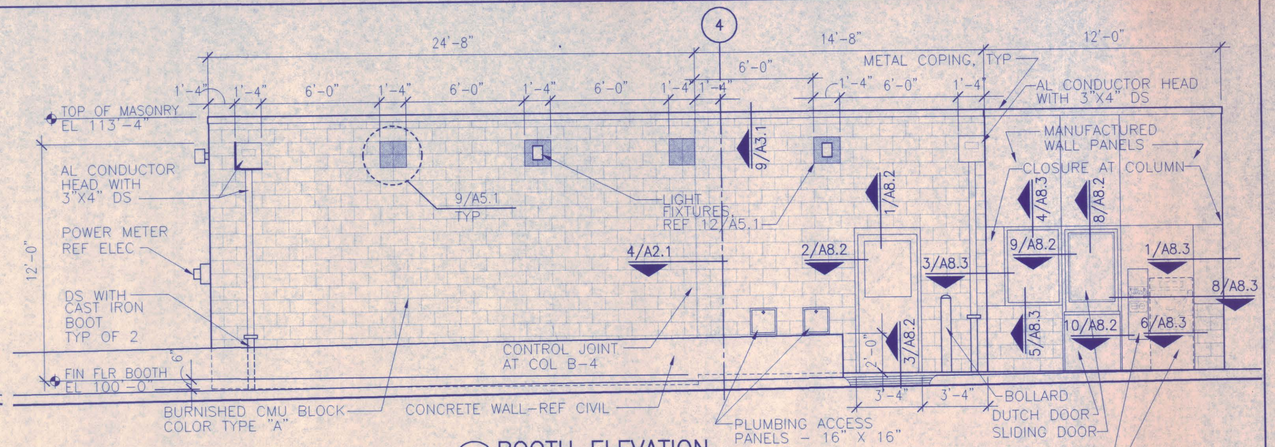

1 BOOTH ELEVATION
1/4"=1'-0"

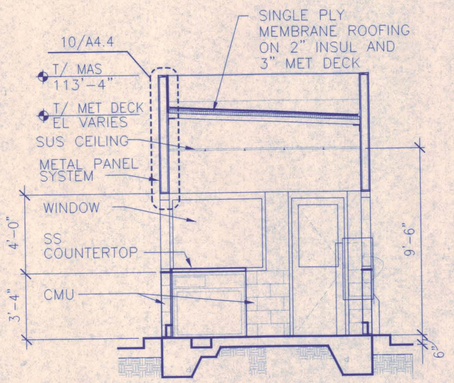

7 BOOTH SECTION
1/4"=1'-0"

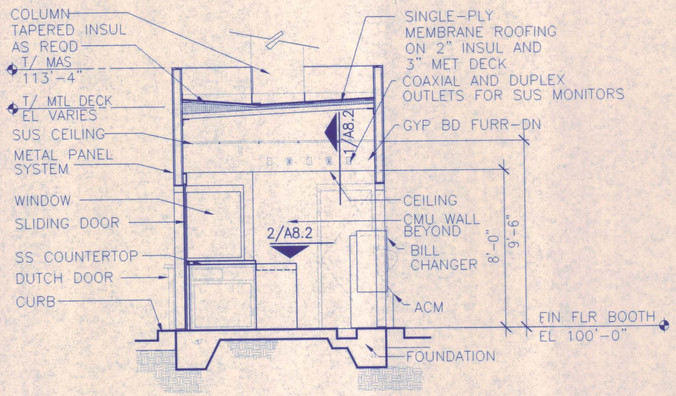

6 BOOTH SECTION
1/4"=1'-0"

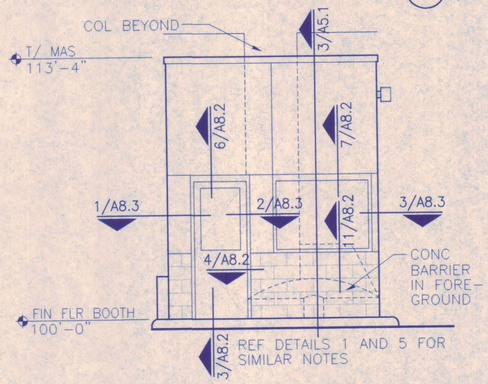

4 BOOTH ELEVATION
1/4"=1'-0"

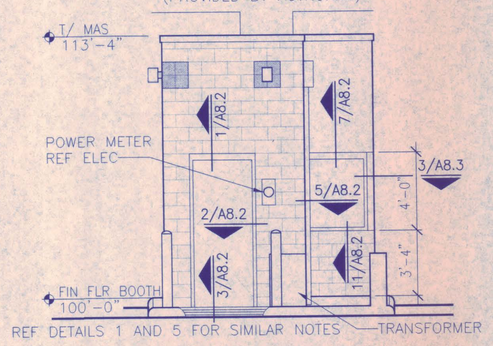

2 BOOTH ELEVATION
1/4"=1'-0"

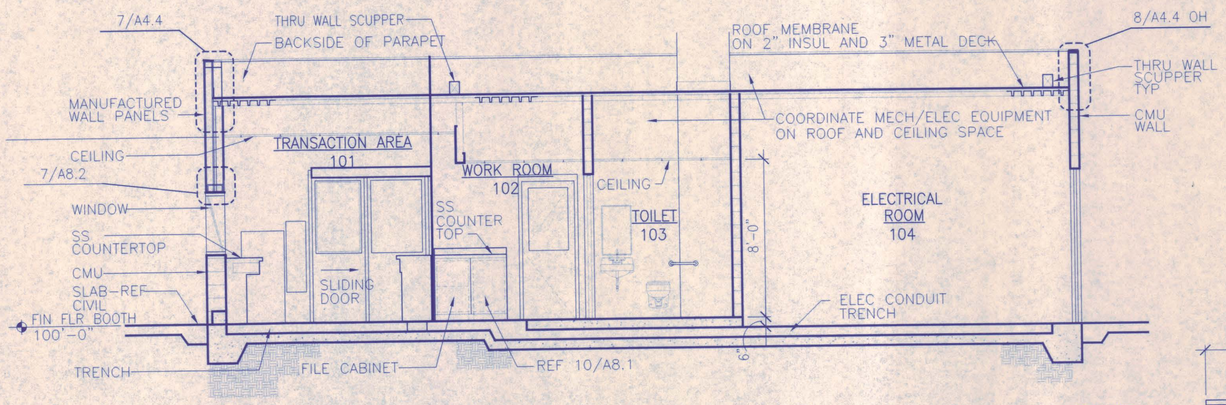

3 BOOTH SECTION
1/4"=1'-0"

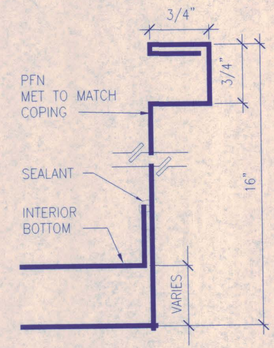

8 CONDUCTOR HEAD
FULL SIZE

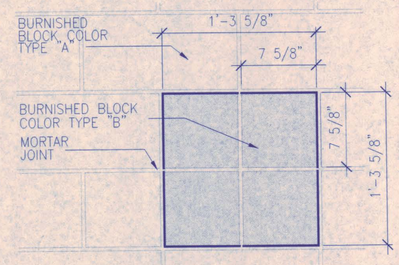

9 DETAIL
1 1/2"=1'-0"

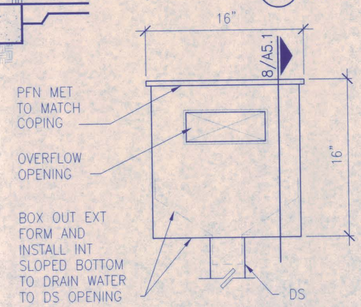

10 CONDUCTOR HEAD EL
1 1/2"=1'-0"

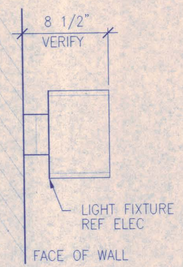

11 DETAIL
1 1/2"=1'-0"

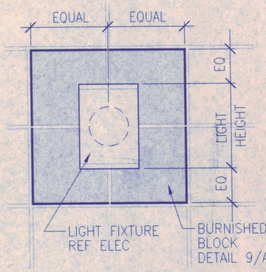

12 DETAIL
1 1/2"=1'-0"

AT-A5.1

NO.	REVISION	BY	DATE

NORTH TEXAS TOLLWAY AUTHORITY

ADDISON AIRPORT TUNNEL BARRIER TOLL PLAZA

TUNNEL PLAZA
BOOTH ELEVATIONS, SECTIONS AND DETAILS

AGUIRRE corporation
12700 PARK CENTRAL DRIVE
15 TH FLOOR
DALLAS TEXAS 75251
TEL (972) 788-1508

SECTION XIII

CHECKED DATE 12/18/97 DESIGNED MM DATE 8/15/96
CHECKED DATE 12/18/97 SCALE AS SHOWN
CONTRACT NO. DNT-290 SHEET 27 OF 53

12/18/97
REGISTERED ARCHITECT STEPHEN OWEN HALL 2815 STATE OF TEXAS

H:\gi-proj\9603-01\dwg\ADDISON\TAAT_A51.dwg
Tue Dec 16 15:07:22 1997

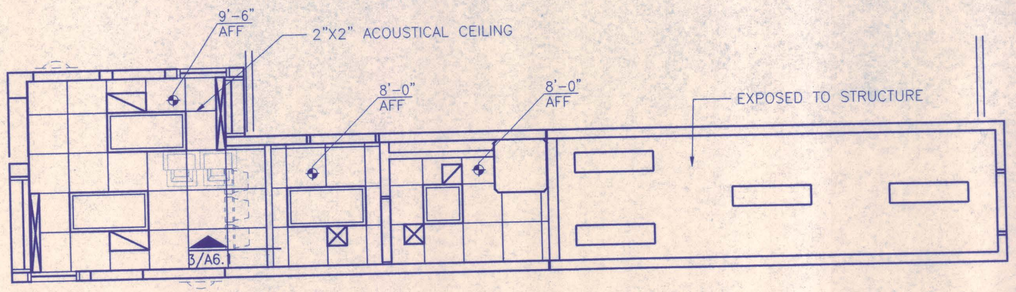

2 BOOTH REFLECTED CEILING PLAN

1/4"=1'-0" TAATAPC2

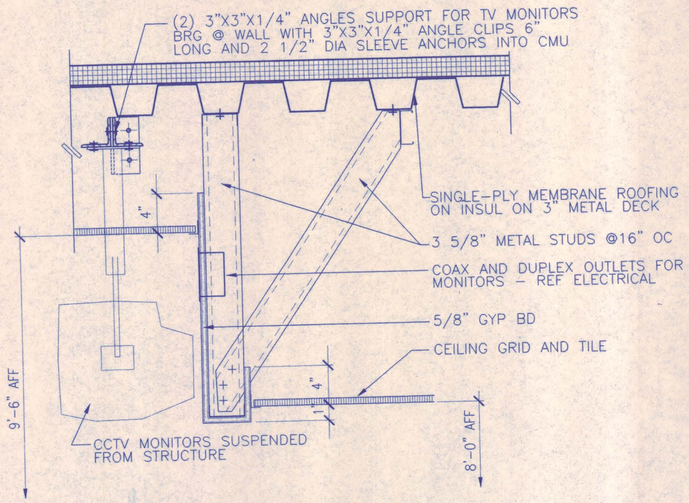

3 FURR-DOWN DETAIL

1 1/2"=1'-0" TAATAD33

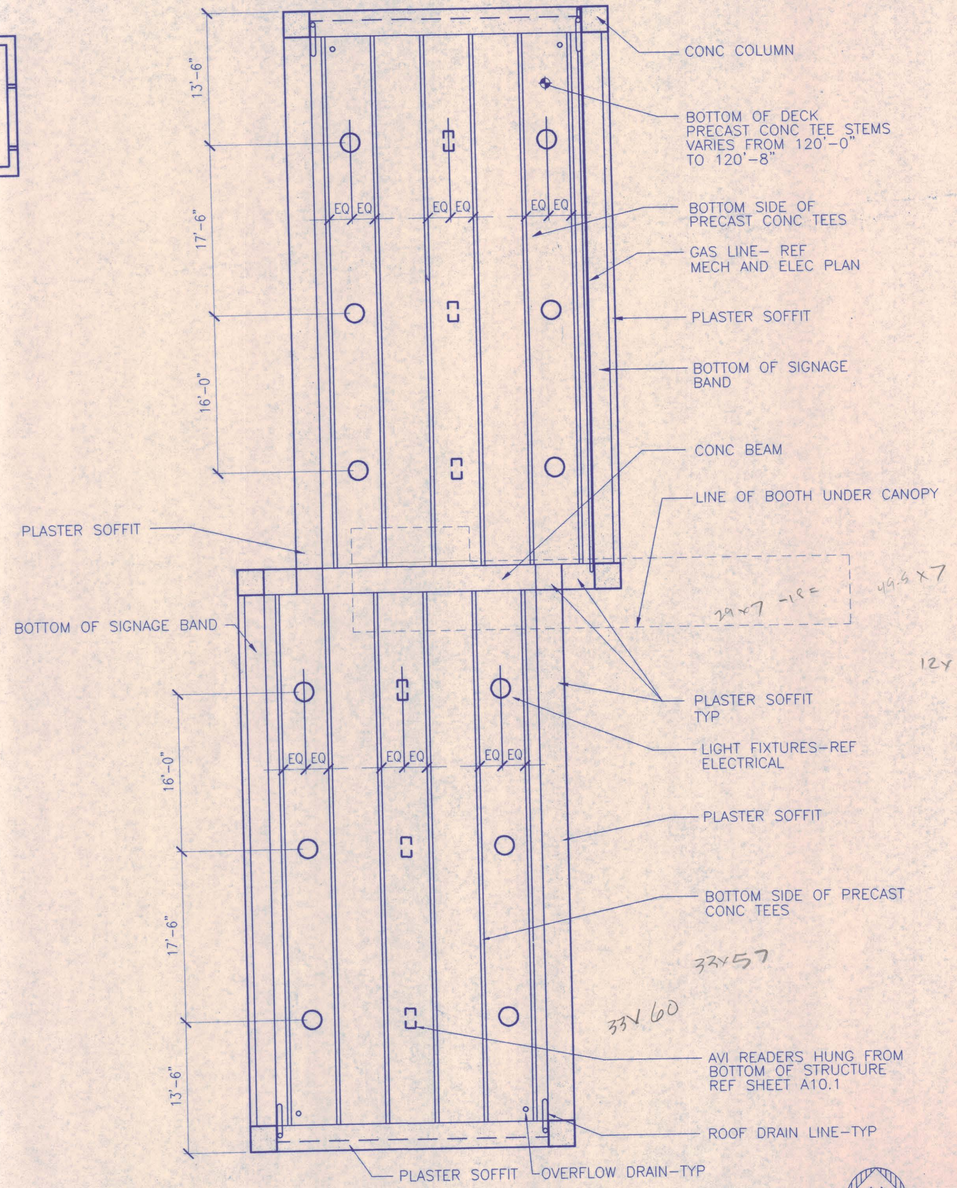

1 CANOPY REFLECTED CEILING PLAN

1/8"=1'-0" TAATAPC1

1880
1881
185

GENERAL NOTES

1. COORDINATE ALL WORK WITH ELECTRICAL AND MECHANICAL PLANS.

PROVIDE BIRD PREVENTION SYSTEMS AT EACH END OF ALL PRECAST CONCRETE TEES; TO BE MOUNTED ON TOP OF THE SUPPORTING CONCRETE BEAMS

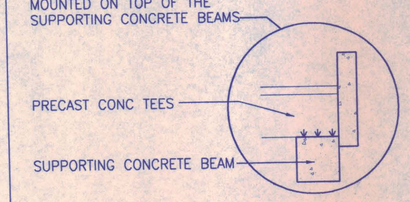

LEGEND

- 2 X 2 ACOUSTICAL CLG GRID & TILES
- RETURN AIR GRILLE
- SUPPLY AIR GRILLE
- LAY-IN LIGHT FIXTURE
- SURFACE MOUNTED/HUNG LIGHT FIXTURE
- STRIP LIGHT SURFACE MOUNTED

3x16.5
v2.0

REGISTERED ARCHITECT STEPHEN OWEN HALL 2815 STATE OF TEXAS

NO.	REVISION	BY	DATE

NORTH TEXAS TOLLWAY AUTHORITY

ADDISON AIRPORT TUNNEL BARRIER TOLL PLAZA

TUNNEL PLAZA REFLECTED CEILING PLANS

AGUIRRE Incorporation
12700 PARK CENTRAL DRIVE
16 TH FLOOR
DALLAS TEXAS 75251
TEL (972) 788-1008

SECTION XIII

CHECKED DATE 12/18/97
CHECKED DATE 12/18/97
DESIGNED MM DATE 8/15/96
SCALE AS SHOWN

CONTRACT NO. DNT-290 SHEET 28 OF 53

AT-A6.1

H:\aai-proj\9603-01\DWG\ADDISON\TAAT_A61.dwg
Wed Dec 10 13:41:40 1997

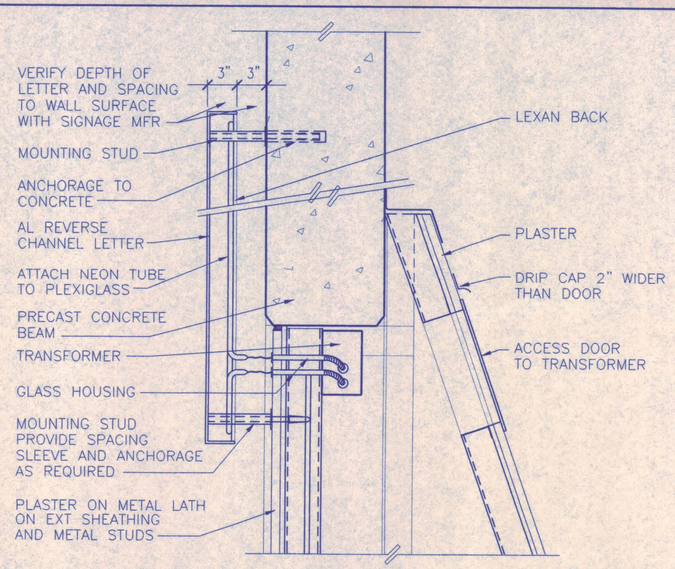

2 SIGNAGE TYPE 6 SECTION
1 1/2"=1'-0" TAATAD35

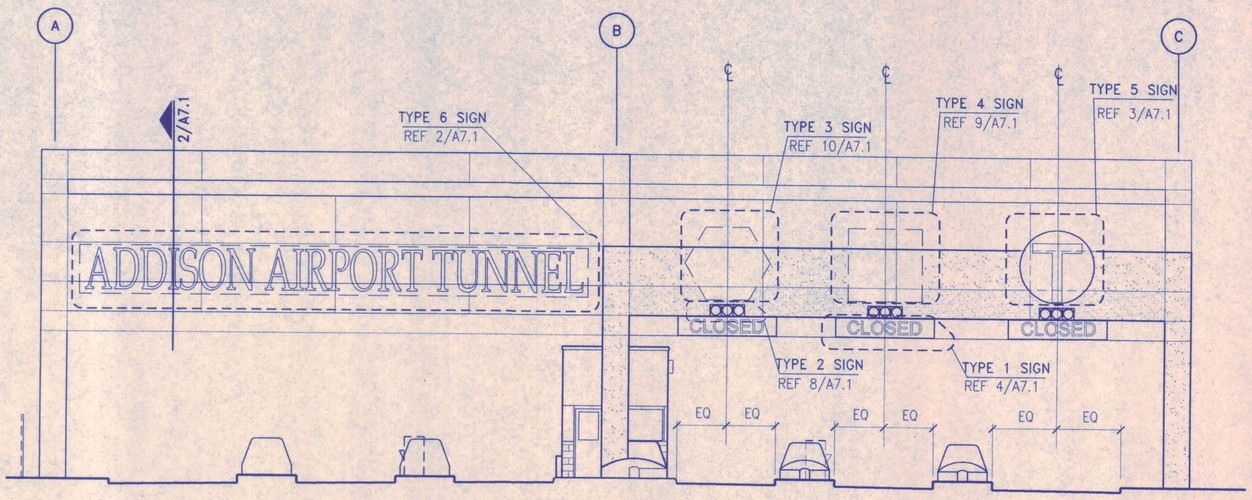

1 LOCATION OF SIGNAGE
1/8"=1'-0" TAATAEE1

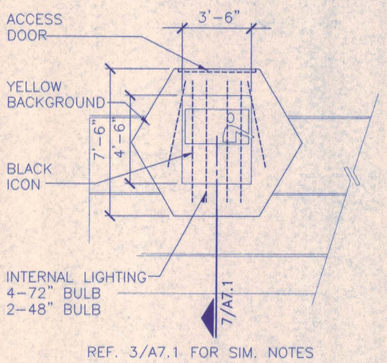

10 SIGNAGE TYPE 3 ELEVATION
1/4"=1'-0" TAATAD66

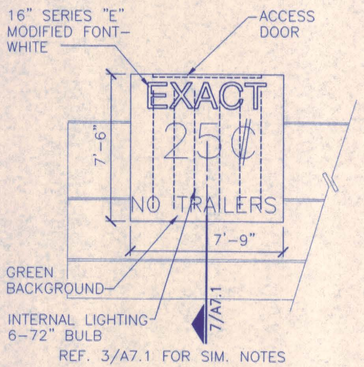

9 SIGNAGE TYPE 4 ELEVATION
1/4"=1'-0" TAATAD66

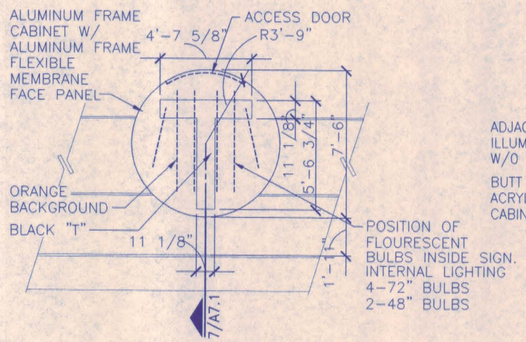

3 SIGNAGE TYPE 5 ELEVATION
1/4"=1'-0" TAATAD66

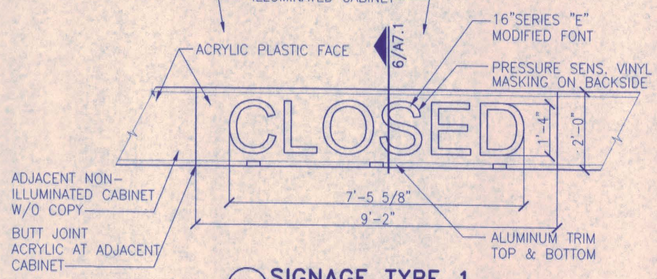

4 SIGNAGE TYPE 1
1/2"=1'-0" TAATAD65

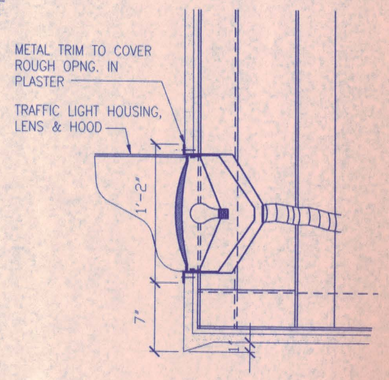

5 SECTION AT SIGN TYPE 2
1 1/2"=1'-0" TAATAD67

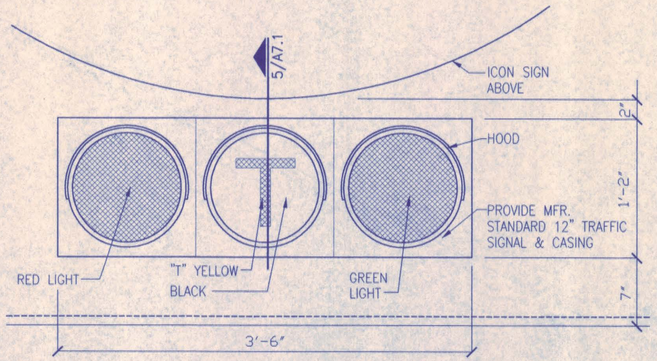

8 SIGNAGE TYPE 2
1 1/2"=1'-0" TAATAD64

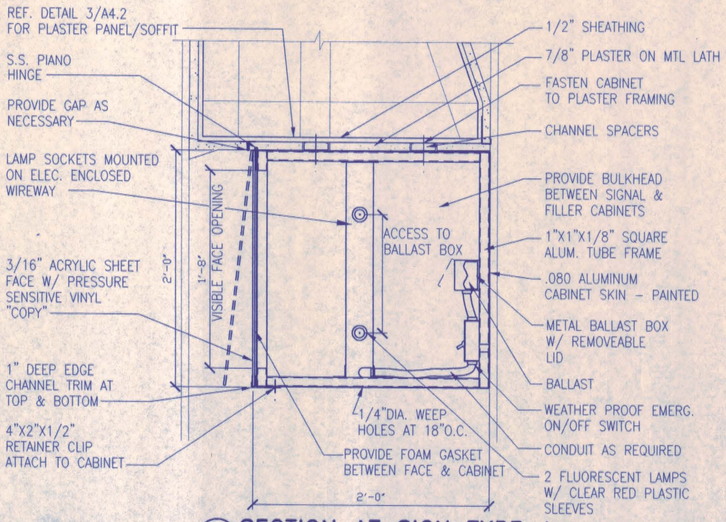

6 SECTION AT SIGN TYPE 1
1 1/2"=1'-0" TAATAD62

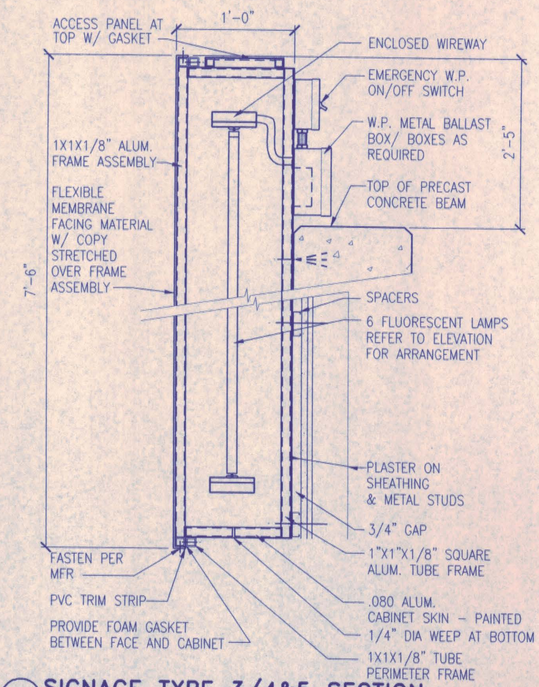

7 SIGNAGE TYPE 3/4&5 SECTION
1 1/2"=1'-0" TAATAD63

Signed 12/18/97

REGISTERED ARCHITECTS STATE OF TEXAS STEPHEN OWEN HALL 2815

NO.	REVISION	BY	DATE

NORTH TEXAS TOLLWAY AUTHORITY

ADDISON AIRPORT TUNNEL BARRIER TOLL PLAZA

TUNNEL PLAZA SIGNAGE DETAILS

AGUIRRE Corporation
16700 PARK CENTRAL DRIVE
16 TH FLOOR
DALLAS TEXAS 75001
TEL (972) 788-9005

SECTION XIII

CHECKED DATE 12/18/97
CHECKED DATE 12/18/97
DESIGNED MM DATE 8/15/96
SCALE AS SHOWN

CONTRACT NO. DNT-290 SHEET 29 OF 53

AT-A7.1

H:\aai-proj\9603-01\DWG\ADDISON\TAAT_A71.dwg
Wed Dec 10 13:43:11 1997

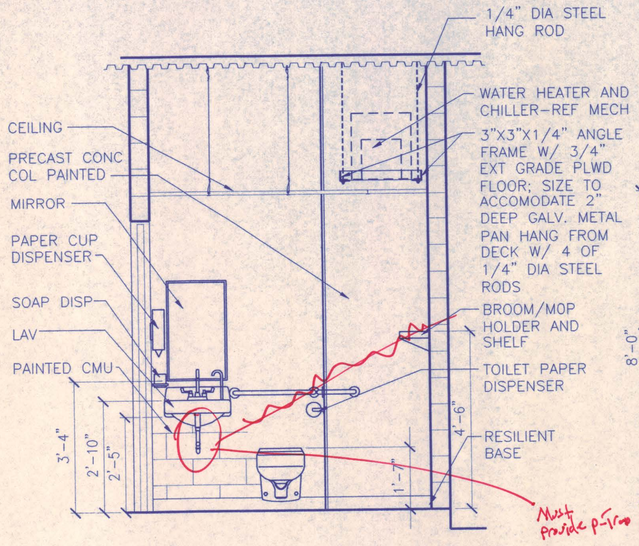

1 TOILET ELEVATION
1/2"=1'-0" TAATATE1

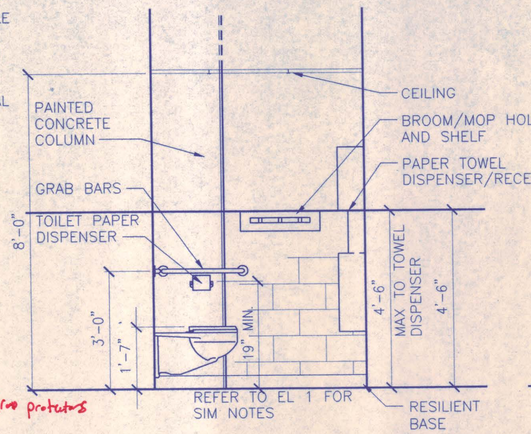

2 TOILET ELEVATION
1/2"=1'-0" TAATATE1

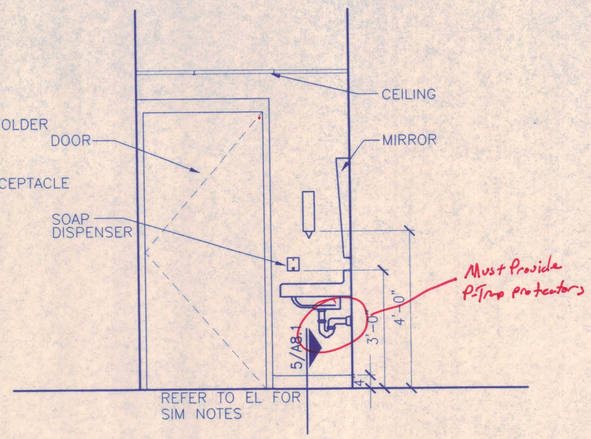

3 TOILET ELEVATION
1/2"=1'-0" TAATATE1

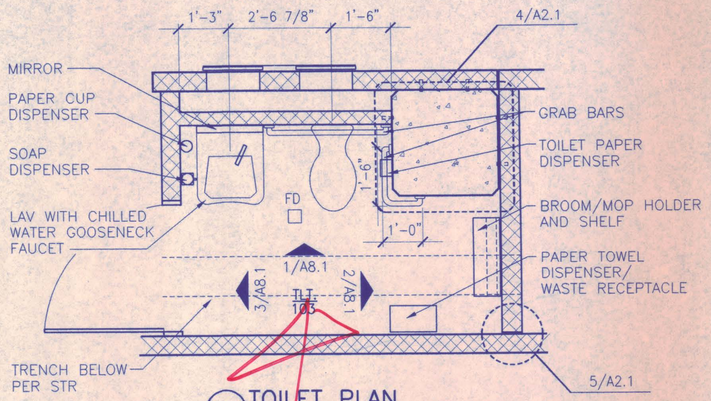

4 TOILET PLAN
1/2"=1'-0" TAATAPN3

ARCHITECT SHALL VARIFY THIS RESTROOM MEET ~~[illegible]~~ STANDARDS OF 1991 UBC.

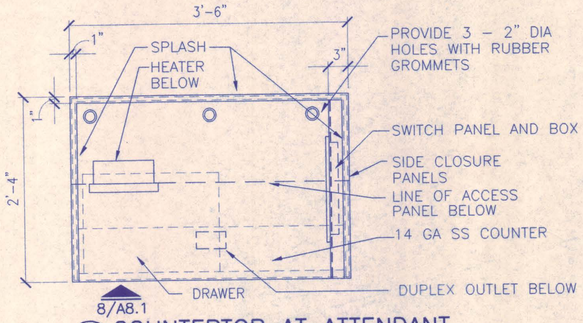

7 COUNTERTOP AT ATTENDANT
1"=1'-0" TAATAEQ1

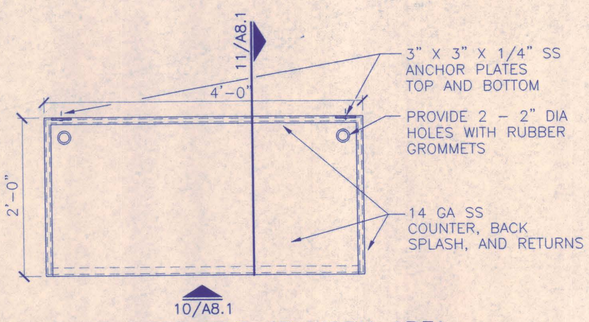

6 COUNTER TOP AT WORK AREA
1"=1'-0" TAATAEQ2

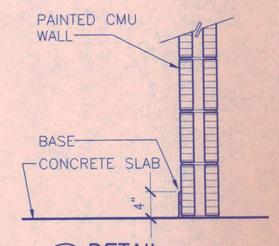

5 DETAIL
1"=1'-0" TAATAD34

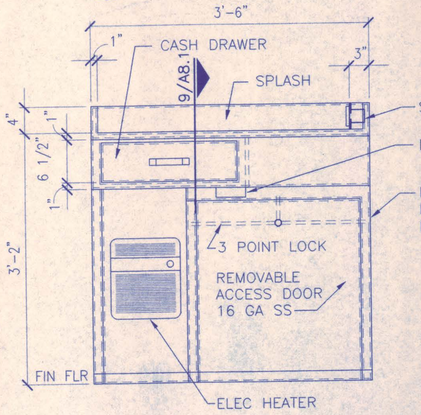

8 FRONT
1"=1'-0" TAATAEQ1

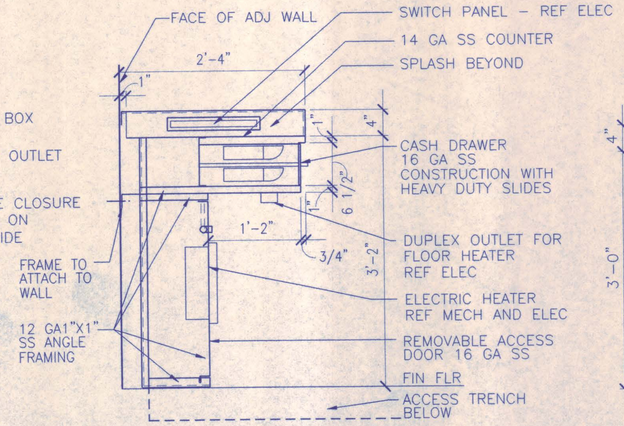

9 SECTION
1"=1'-0" TAATAEQ1

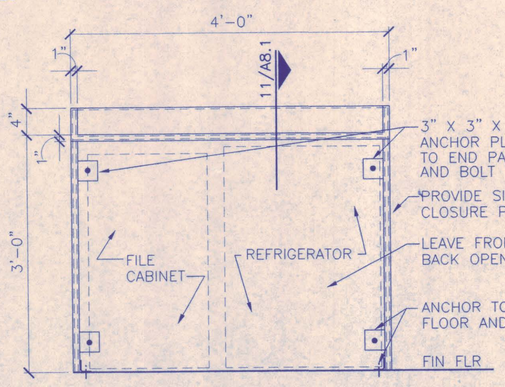

10 FRONT
1"=1'-0" TAATAEQ2

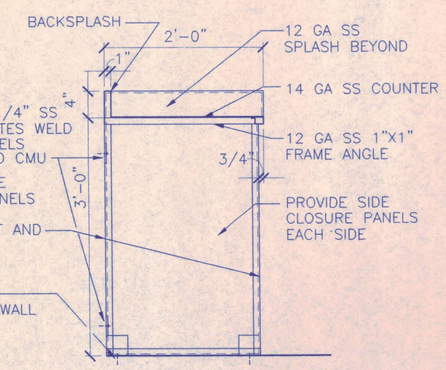

11 SECTION
1"=1'-0" TAATAEQ2

AT-A8.1

NO.	REVISION	BY	DATE

NORTH TEXAS TOLLWAY AUTHORITY

ADDISON AIRPORT TUNNEL BARRIER TOLL PLAZA

TUNNEL PLAZA
BOOTH INTERIOR
ELEVATIONS AND DETAILS

AGUIRRE corporation
15700 PARK CENTRAL DRIVE
15 TH FLOOR
DALLAS TEXAS 75251
TEL (972) 788-1508

SECTION XIII

CHECKED DATE 12/18/97
CHECKED DATE 12/18/97
DESIGNED MM DATE 8/15/96
SCALE AS SHOWN
CONTRACT NO. DNT-290 SHEET 30 OF 53

STEPHEN OWEN HALL 2815 REGISTERED ARCHITECT STATE OF TEXAS

12/18/97

H:\aai-proj\9603-01\DWG\ADDISON\TAAT_A81.dwg
Wed Dec 10 13:44:01 1997

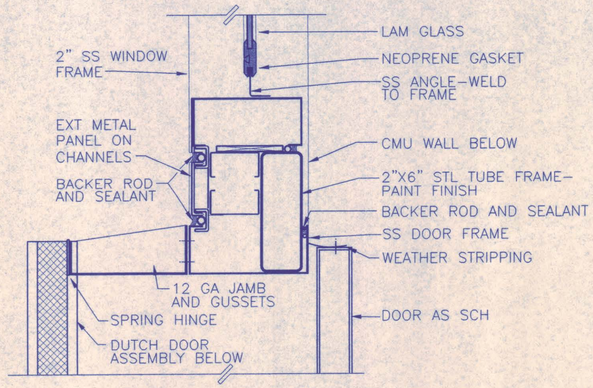

9 SLIDING DOOR JAMB
3"=1'-0" TAATAD40

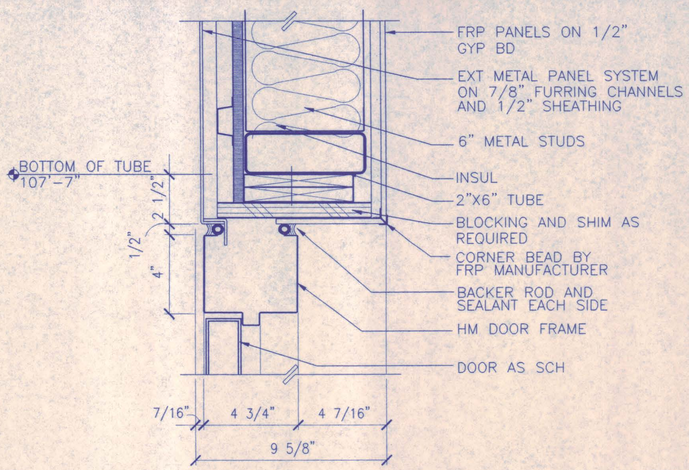

6 DOOR HEAD
3"=1'-0" TAATAD26

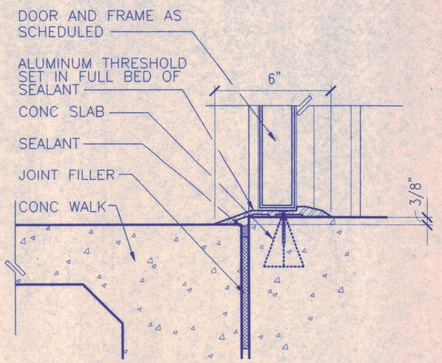

3 DOOR SILL
3"=1'-0" TAATAD23

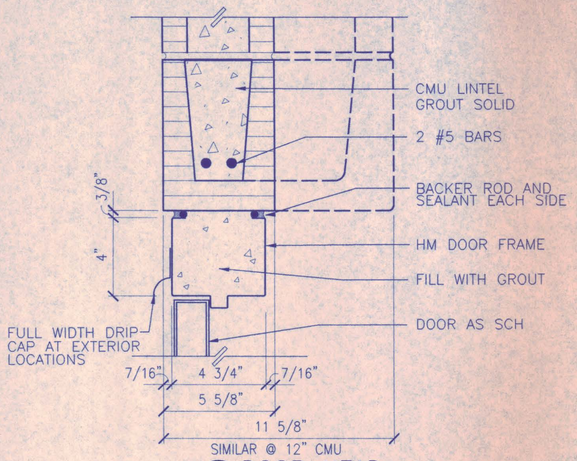

1 DOOR HEAD
3"=1'-0" TAATAD21

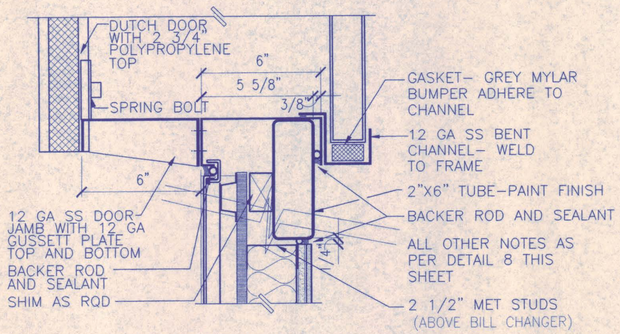

10 SLIDING DOOR JAMB
3"=1'-0" TAATAD29

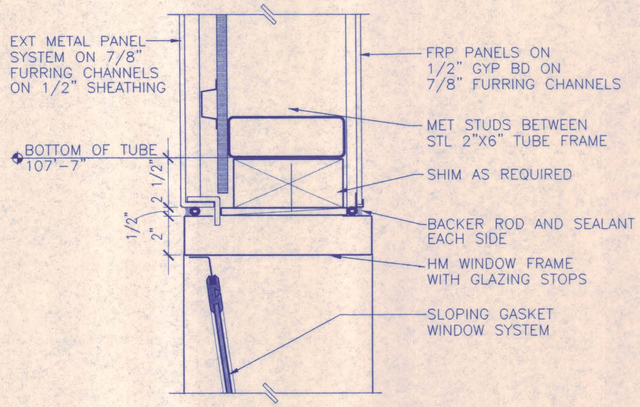

7 WINDOW HEAD
3"=1'-0" TAATAD48

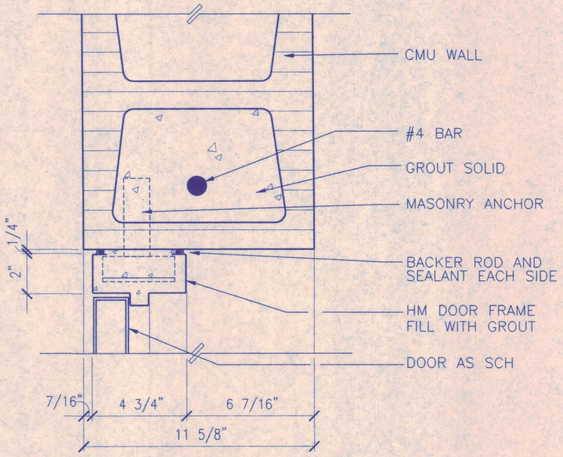

4 DOOR JAMB
3"=1'-0" TAATAD25

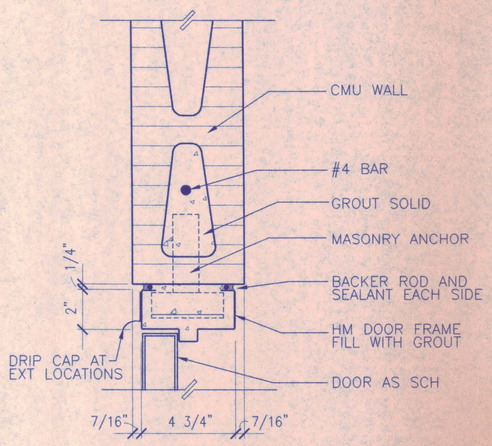

2 DOOR JAMB
3"=1'-0" TAATAD22

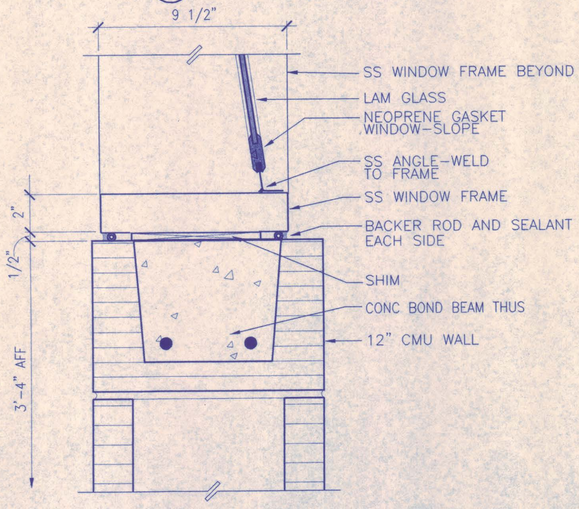

11 WINDOW SILL
3"=1'-0" TAATAD41

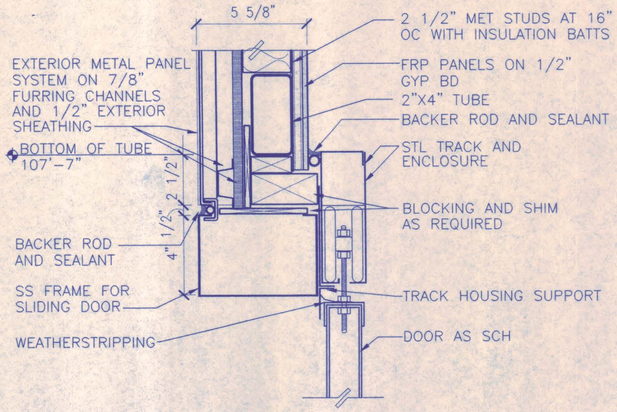

8 DOOR HEAD
3"=1'-0" TAATAD28

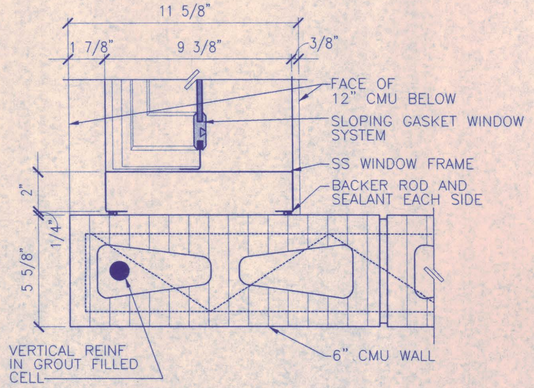

5 WINDOW JAMB
3"=1'-0" TAATAD50

AT-A8.2

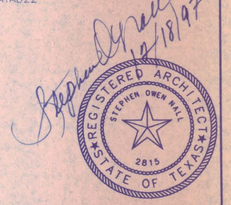

NO.	REVISION	BY	DATE

NORTH TEXAS TOLLWAY AUTHORITY

ADDISON AIRPORT TUNNEL BARRIER TOLL PLAZA

INTERIOR DETAILS

AGUIRREcorporation
12700 PARK CENTRAL DRIVE
16 TH FLOOR
DALLAS TEXAS 75251
TEL (972) 752-1505

SECTION XIII

CHECKED DATE 12/18/97
CHECKED DATE 12/18/97
DESIGNED MM DATE 8/15/96
SCALE AS SHOWN

CONTRACT NO. DNT-290 SHEET 31 OF 53

H:\aai-proj\9603-01\DWG\ADDISON\TAAT_A82.dwg
Wed Dec 10 13:45:15 1997

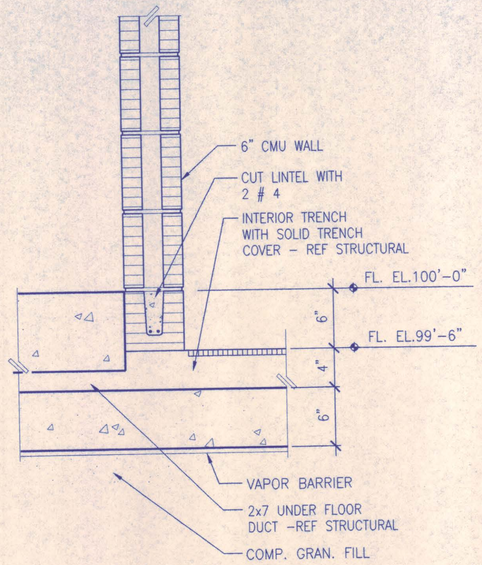

7 TRENCH TRANSITION
1 1/2"=1'-0" TAATAD68

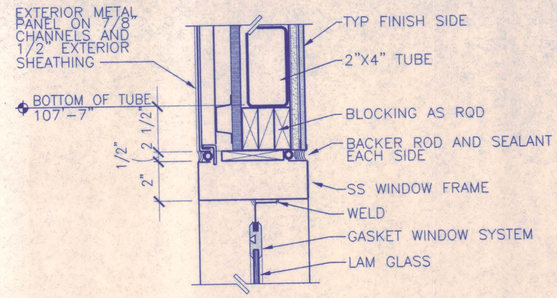

4 HEAD AT SIDE WINDOWS
3"=1'-0" TAATAD53

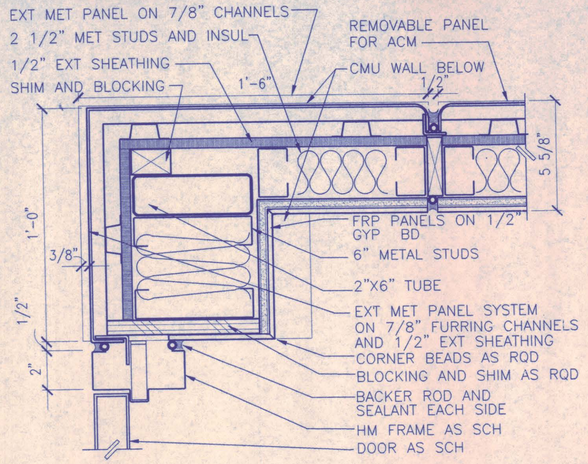

1 DOOR JAMB
3"=1'-0" TAATAD27

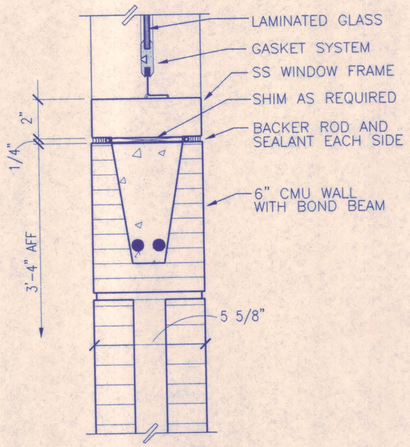

5 SILL AT SIDE WINDOWS
3"=1'-0" TAATAD52

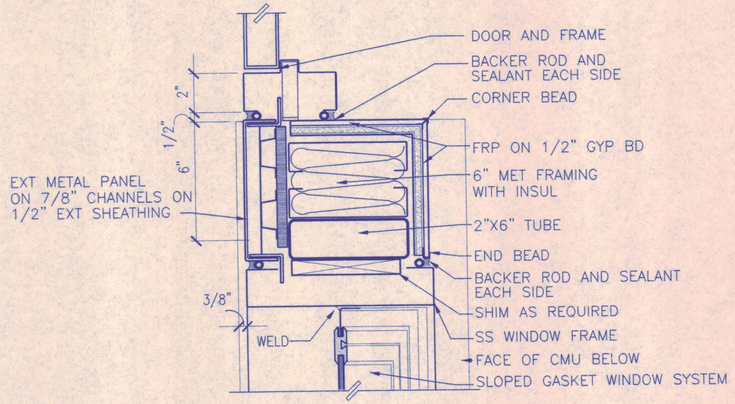

2 DOOR JAMB
3"=1'-0" TAATAD49

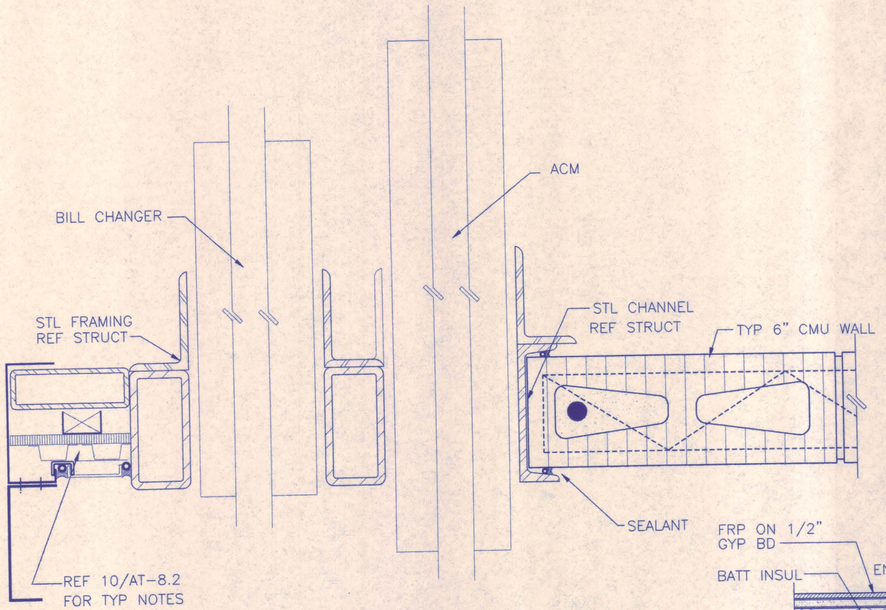

8 DTL AT ACM / BILL CHANGER
3"=1'-0" TAATAD61

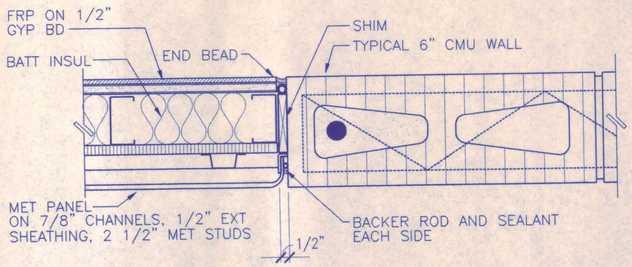

6 DETAIL THRU ACM
3"=1'-0" TAATAD51

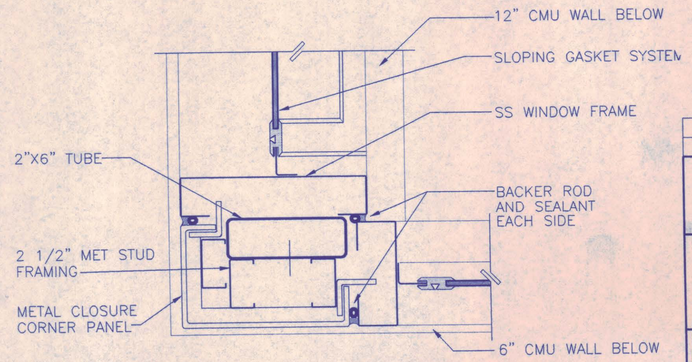

3 WINDOW JAMB
3"=1'-0" TAATAD42

AT-A8.3

NO.	REVISION	BY	DATE

NORTH TEXAS TOLLWAY AUTHORITY

ADDISON AIRPORT TUNNEL BARRIER TOLL PLAZA

INTERIOR DETAILS

AGUIRRE Corporation
12700 PARK CENTRAL DRIVE
15 TH FLOOR
DALLAS TEXAS 75251
TEL (972) 788-1605

SECTION XIII

CHECKED DATE 12/18/97 DESIGNED MM DATE 8/15/96
CHECKED DATE 12/18/97 SCALE AS SHOWN
CONTRACT NO. DNT-290 SHEET 32 OF 53

REGISTERED ARCHITECT STEPHEN OWEN HALL 2815 STATE OF TEXAS

H:\aai-proj\9603-01\DWG\ADDISON\TAAT_A83.dwg
Thu Dec 11 14:56:20 1997

V.I.V.I.D. SCHEDULE

		SIZE W	SIZE D	SIZE H	REMARKS	PROVIDED BY V.I.V.I.D. CONTRACT	PROVIDED BY G.C.
1.	CRT STAND	14"	12 1/2"	4 3/4"	SETS LOOSE ON COUNTERTOP	X	
2.	MONITOR	14"	15"	15"	SETS LOOSE ON COUNTERTOP	X	
3.	KEYBOARD	13"	7 1/2"	2"	SETS LOOSE ON COUNTERTOP	X	
4.	RECEIPT PRINTER	6 1/4"	16 1/2"	9 1/4"	SETS LOOSE ON COUNTERTOP	X	
5.	TELEPHONE	8 1/2"	7 1/2"	12"	MOUNTED ON COUNTERTOP	X	
6.	EMERGENCY FOOT ALARM	18"	4 3/4"	4 3/4"	SETS LOOSE ON FLOOR	X	
7.	COIN VENDING MACHINE	22"	12"	27"	MOUNTED ON STEEL FRAME	X	
8.	CASH DROP BOX VAULT HOUSING	16" 1/2"	16"	21"	BOLTED TO FLOOR	X	
9.	AUTOMATIC COIN MACHINE	26"	26"	56"	FRAME IN BOOTH WALL	X	
10.	CLOSED CIRCUIT TV MONITOR	15"	15"	15"	HUNG FROM STRUCTURE	X	
11.	EMERGENCY HAND ALARM	3"	1 1/8"	4"	MOUNTED ON WALL	X	
12.	FARE INDICATOR	15"	8"	6"	MOUNTED 46" AFF ON EXTERIOR WALL	X	
13.	IN LANE PROCESSOR	24"	16"	30"	MOUNTED ON WALL	X	
14.	AVI CONTROLLER	20"	11"	24"	MOUNTED ABOVE ILP	X	
15.	AUTOMATIC COIN MACHINE	26"	24"	57"	MOUNTED ON ISLAND	X	
16.	BILL CHANGER	12 1/4"	18"	38 5/8"	FRAME IN BOOTH WALL		X
17.	TREADLE	12"	84"	8"	SET IN PAVEMENT, COORDINATE W/CIVIL	X	
18.	LOOP DETECTORS	42"	108"	–	INSTALLED IN SAWCUT IN PAVEMENT	X	
19.	AVI READERS	28"	28"	28"	HUNG FROM STRUCTURE	X	
20.	TOLL COLLECTION LIGHT	10"	10"	48"	PEDESTAL MOUNTED	X	
21.	VIOLATION DETECTION CAMERA	8"	24"	8"	PEDESTAL MOUNTED	X	
22.	SECURITY CAMERA	6"	18"	6"	MOUNTED ON WALL OR CEILING AS REQ. COORDINATE LOCATION WITH SECURITY.		X

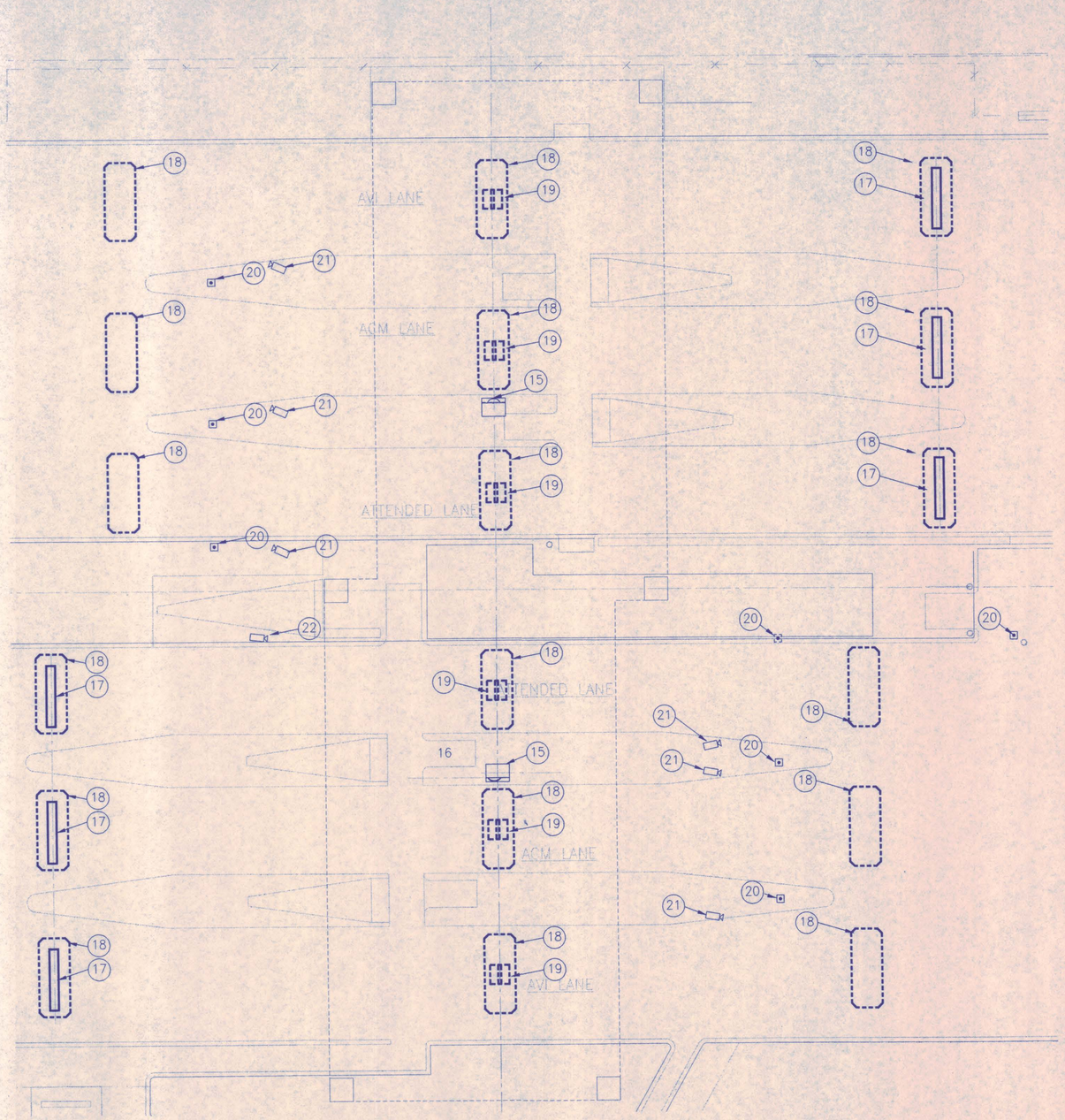

1 V.I.V.I.D. CANOPY PLAN
1/8"=1'-0" TAATAPS1.DWG

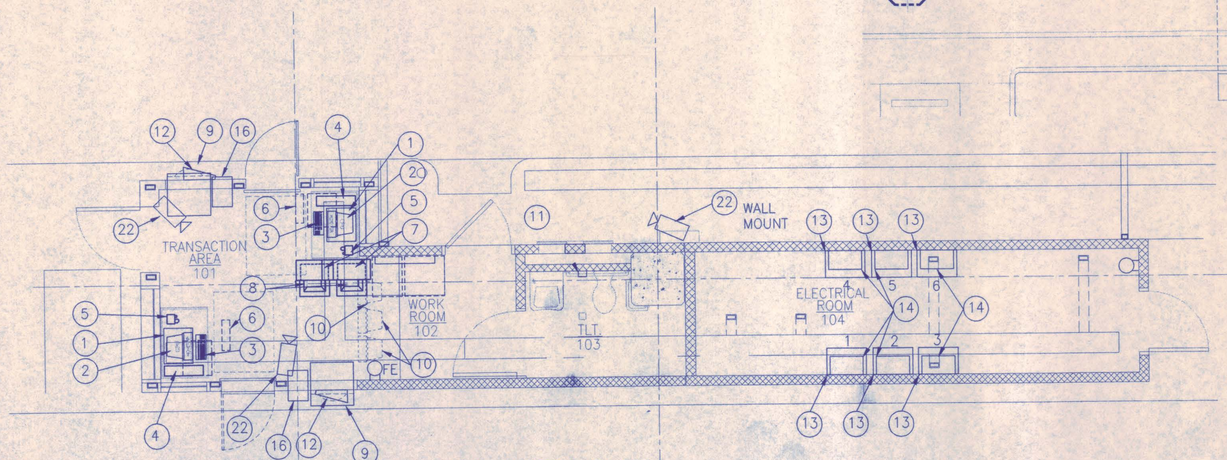

2 V.I.V.I.D.BOOTH PLAN
1/4"=1'-0" TAATAPN2

N.I.C. – V.I.V.I.D. DRAWINGS ARE FOR INFORMATION PURPOSES ONLY

NORTH

GENERAL NOTES

1. ALL LOCATIONS ARE APPROXIMATE. EQUIPMENT SHOWN FOR INFORMATIONAL PURPOSE.
2. COORDINATE ALL EQUIPMENT WITH ELECTRICAL DRAWINGS FOR CONDUIT (POWER AND CONTROLS) LOCATIONS.
3. V.I.V.I.D. – VIDIO INTEGRATED VOICE AND AND INTEGRATED DATA EQUIPMENT TO BE PROVIDED AND INSTALLED BY OTHERS, WITH EXCEPTION OF BILL CHANGER AND SECURITY CAMERAS REFER TO ITEMS 16 AND 22.

12/18/97

REGISTERED ARCHITECT STEPHEN OWEN HALL 2815 STATE OF TEXAS

NO.	REVISION	BY	DATE

NORTH TEXAS TOLLWAY AUTHORITY
ADDISON AIRPORT TUNNEL BARRIER TOLL PLAZA

V.I.V.I.D. EQUIPMENT COORDINATION DRAWINGS

AGUIRRE Corporation
12700 PARK CENTRAL DRIVE
15 TH FLOOR
DALLAS TEXAS 75251
TEL (972) 788-1908

SECTION XIII

CHECKED SLOH DATE 12/18/97 DESIGNED MM DATE 8/15/96
CHECKED TJC DATE 12/18/97 SCALE AS SHOWN
CONTRACT NO. DNT-290 SHEET 33 OF 53

AT-A10.1

H:\aai-proj\9603-01\DWG\ADDISON\TAATA101.dwg
Wed Dec 10 13:34:12 1997

GENERAL STRUCTURAL NOTES

GENERAL CONSTRUCTION:

1. ALL DETAILS AND SECTIONS SHOWN ON THE DRAWINGS ARE INTENDED TO BE TYPICAL AND SHALL BE CONSTRUED TO APPLY TO SIMILAR CONDITIONS ELSEWHERE.

2. THE CONTRACTOR SHALL FIELD CHECK AND VERIFY ALL EXISTING CONDITIONS INCLUDING ANY EXISTING CONSTRUCTION AND REPORT ANY DISCREPANCIES BEFORE PROCEEDING WITH THE WORK.

3. THE CONTRACTOR SHALL BE FAMILIAR WITH THE SCOPE OF THE WORK AND SOIL AND WATER CONDITIONS BEFORE PROCEEDING WITH THE WORK. SOIL BORING LOCATIONS AND SOIL BORING LOGS ARE INCLUDED IN THE SPECIFICATIONS. SOIL INFORMATION RELEASED IN THE SPECIFICATIONS IS FOR GENERAL INFORMATION ONLY, THE ACTUAL CONDITIONS MAY VARY AT THE SITE.

4. THE CONTRACTOR SHALL NOTIFY THE ENGINEER IMMEDIATELY OF ANY DISCREPANCIES BETWEEN CONSTRUCTION DOCUMENTS AND ACTUAL FIELD CONDITIONS.

5. THE CONTRACTOR SHALL VERIFY THE SIZE AND LOCATION OF HOLES AND SLEEVES THROUGH ALL WALLS AND SLABS WITH MECHANICAL AND PLUMBING CONTRACTORS.

6. ALL STEEL BUILDING FRAMES, UNLESS OTHERWISE NOTED , ARE NON-SELF SUPPORTING STEEL FRAMES AS DEFINED IN THE "CODE OF STANDARD PRACTICE FOR STEEL BUILDINGS AND BRIDGES" (AISC 986), SECTION [7.9.3]. THE CONTRACTOR SHALL PROVIDE TEMPORARY LATERAL BRACING FOR STEEL FRAMES UNTIL ALL BEAM-COLUMN CONNECTIONS ARE COMPLETE AND THE FLOOR AND ROOF DIAPHRAGMS ARE INSTALLED AND OF ADEQUATE STRENGTH.

7. THE STRUCTURE HAS BEEN DESIGNED FOR THE IN-SERVICE LOADS ONLY. THE METHODS, PROCEDURES AND SEQUENCES OF CONSTRUCTION ARE THE RESPONSIBILITY OF THE CONTRACTOR. THE CONTRACTOR SHALL TAKE ALL NECESSARY PRECAUTIONS TO MAINTAIN AND ENSURE INTEGRITY OF THE STRUCTURE AT ALL STAGES OF CONSTRUCTION.

FOUNDATIONS:

1. FOUNDATION DESIGN IS BASED UPON A SOILS REPORT PREPARED BY LACHEL AND ASSOCIATES, GOLDEN, COLORADO. DATED JUNE, 1996.

2. ALL PIERS SHALL BEAR ON FRESH (UNWEATHERED) AUSTIN LIMESTONE WITH A BEARING CAPACITY 30 KSF.

3. ALL PIERS SHALL BE CENTERED ON BUILDING COLUMN REFERENCE LINES UNLESS INDICATED BY AN OFFSET DIMENSION OR OTHERWISE DETAILED.

CAISSONS:

1. INSPECTION AGENCY SHALL INSPECT BOTTOM OF CAISSON SO THAT CAISSON DIAMETER AND CLEANLINESS CAN BE VERIFIED.

CONCRETE:

1. ALL REINFORCED CONCRETE SHALL BE DESIGNED AND CONSTRUCTED IN ACCORDANCE WITH THE "BUILDING CODE REQUIREMENTS FOR REINFORCED CONCRETE" (ACI 318-95) AND COMMENTARY (ACI 318R-95) BY THE AMERICAN CONCRETE INSTITUTE.

2. REINFORCING BAR DETAILING, FABRICATING, AND PLACING SHALL CONFORM TO THE "ACI STANDARD: DETAILS AND DETAILING OF CONCRETE REINFORCEMENT" (ACI 315-80, REVISED 1986) AND THE "MANUAL OF ENGINEERING AND PLACING DRAWINGS FOR REINFORCED CONCRETE STRUCTURES" (ACI 315R-80, REVISED 1988) BY THE AMERICAN CONCRETE INSTITUTE. THE MOST CURRENT EDITIONS OF CONCRETE REINFORCING STEEL INSTITUTE'S "REINFORCING BAR DETAILING" AND "PLACING REINFORCING BARS" MAY ALSO BE USED.

3. MINIMUM CONCRETE COMPRESSIVE STRENGTH (f'c) AT 28 DAYS:
   FOOTINGS . . . . . 3600 PSI - CLASS C
   DRILLED PIERS. . . . . 3600 PSI - CLASS C
   ALL OTHER CONCRETE . . . . . .4000 PSI

4. CONCRETE REINFORCEMENT MATERIAL SHALL BE AS FOLLOWS:

   DEFORMED BARS - COMPLYING WITH ASTM A615-87 (GRADE 60) AND HAVING A MINIMUM YIELD STRENGTH OF 60,000 PSI.

   WELDED WIRE FABRIC - SMOOTH WIRE FABRIC COMPLYING WITH ASTM A185-85 (SHEETS ONLY).

5. CONCRETE PROTECTION FOR REINFORCEMENT SHALL BE AS FOLLOWS:

   UNLESS OTHERWISE SHOWN THE CLEAR DISTANCE FROM THE FACE OF CONCRETE TO THE REINFORCING STEEL SHALL BE:

   CONCRETE CAST AGAINST EARTH OR WATER (NOTE A) . . . 3"

   CONCRETE CAST TO FORMS EXPOSED TO EARTH, WATER OR WEATHER:
   #6 BARS OR LARGER . . . . . 2"
   SMALLER THAN #6 BARS . . . . . 1 1/2"

   CONCRETE CAST TO FORMS NOT EXPOSED TO EARTH, WATER OR WEATHER:
   SLAB, JOISTS:
   #11 BARS AND SMALLER . . . . . 1"

   BEAMS, COLUMNS, WALLS:
   PRIMARY REINFORCEMENT, TIES,
   STIRRUPS, SPIRALS . . . . . 1 1/2"

   SLABS POURED ON GRADE:
   FROM BOTTOM SURFACE . . . . . 2"
   TROWELED SURFACE (NOTE B) . . . . . 1"
   SCREEDED SURFACE FOR APPLIED TOPPING . . . . . 3/4"

   (NOTE A) EXCLUDING SLABS POURED ON GRADE.
   (NOTE B) INCREASE BY 1/2" IF SURFACE IS TO BE IN PERMANENT CONTACT WITH GROUND OR WATER.

6. UNLESS OTHERWISE SHOWN OR NOTED, SPLICING OF REINFORCING BARS SHALL CONFORM TO THE REQUIREMENTS OF ACI 318-95 BUILDING CODE.

7. UNLESS OTHERWISE SHOWN OR NOTED, TOP AND BOTTOM BARS FOR CONTINUOUS BEAMS SHALL BE OF MAXIMUM LENGTH WITH SPLICES LOCATED AT MIDSPAN FOR TOP BARS AND AT SUPPORTS FOR BOTTOM BARS.

8. ALL HORIZONTAL BARS IN WALLS OR GRADE BEAMS SHALL BE BENT AT CORNERS AND INTERSECTIONS IN SUCH A WAY THAT CONTINUITY IS PROVIDED THROUGH THE JOINT. SEPARATE CORNER BARS OF THE SAME SIZE AND SPACING AS THE HORIZONTAL REINFORCING MAY BE SUBSTITUTED FOR THE BENT PORTION OF THE CONTINUOUS BARS.

9. ALL REINFORCING BAR SPLICES SHALL BE CLASS 'B' TENSION LAP SPLICES UNLESS OTHERWISE SHOWN ON THE DRAWINGS.

10. ALL REINFORCING FOR SLABS ON GRADE SHALL BE CHAIRED WITH SLAB BOLSTERS DESIGNED FOR SUPPORT ON SOIL TO PROVIDE SPECIFIED COVER TO REINFORCING STEEL.

PRECAST/PRESTRESSED CONCRETE:

1. PRECAST/PRESTRESSED CONCRETE SHALL BE DESIGNED IN ACCORDANCE WITH THE "BUILDING CODE REQUIREMENTS FOR REINFORCED CONCRETE" (ACI 318-95) BY THE AMERICAN CONCRETE INSTITUTE.

2. PRECAST/PRESTRESSED CONCRETE SHALL COMPLY WITH RECOMMENDED PRACTICES AND PROCEDURES IN THE "MANUAL FOR QUALITY CONTROL FOR PLANTS AND PRODUCTION OF PRECAST AND PRESTRESSED CONCRETE PRODUCTS" (PCI MNL-116-85) BY THE PRESTRESSED CONCRETE INSTITUTE.

3. UNLESS NOTED OTHERWISE ALL PRECAST/PRESTRESSED CONCRETE SHALL BE SUPPLIED BY A "PCI CERTIFIED PLANT."

4. ALL PRECAST MEMBERS SHALL BE OF SIZE, SHAPE, AND MODULE INDICATED ON THE DRAWINGS. ALL UNITS SHALL BE CAPABLE OF SUPPORTING SUPERIMPOSED DEAD LOADS AND LIVE LOADS AS SCHEDULED PLUS DEAD WEIGHT OF PRECAST. SUBMIT FOR REVIEW, MANUFACTURER'S COMPLETE DESIGN CALCULATIONS PREPARED AND SEALED BY A REGISTERED TEXAS PROFESSIONAL ENGINEER QUALIFIED IN THE DESIGN OF PRECAST AND PRESTRESSED CONCRETE.

5. FIELD CUT HOLES FOR OPENINGS WITHOUT DISTURBING PRESTRESSING STRANDS IN ACCORDANCE WITH PRESTRESSED UNIT MANUFACTURER'S INSTRUCTIONS. VERIFY SIZE AND LOCATION OF HOLES AND SLEEVES WITH OTHER TRADES.

6. PRECAST/PRESTRESSED CONCRETE SHALL HAVE A MINIMUM COMPRESSIVE STRENGTH (f'c) OF 5,000 PSI IN 28 DAYS AND A MINIMUM RELEASE STRENGTH OF 3,500 PSI UNLESS OTHERWISE SPECIFIED.

7. WIRE AND STRANDS FOR TENDONS IN PRESTRESSED CONCRETE SHALL COMPLY WITH ASTM A416-87A.

8. DEFORMED REINFORCING BARS SHALL COMPLY WITH ASTM A615-87

9. WELDED WIRE FABRIC SHALL COMPLY WITH ASTM A185-85.

10. COLD DRAWN STEEL WIRE SHALL COMPLY WITH ASTM A82-85.

11. ANCHORS AND INSERTS FOR PRECAST/PRESTRESSED SHALL BE STRUCTURAL STEEL AND COMPLY WITH ASTM A36.

12. THE PRECAST CONCRETE MANUFACTURER SHALL SUBMIT SHOP DRAWINGS FOR A/E REVIEW WHICH WILL INCLUDE, BUT NOT BE LIMITED TO THE FOLLOWING:

    A. DETAILED LAYOUT DRAWING SHOWING ALL PANEL DIMENSIONS AND JOINT LAYOUT.

    B. INDIVIDUAL MEMBER LOADING, DESIGN AND REINFORCING REQUIREMENTS.

    C. DETAIL ALL REQUIRED BLOCKOUTS, INSERTS AND ANCHORAGE DEVICES AND BEARING PADS.

    D. PROVIDE INFORMATION ON PROCEDURES FOR LEVELING AND ALIGNING PLANKS DUE TO DIFFERENT CAMBER CONDITIONS FOR INDIVIDUAL PLANKS PRIOR TO GROUTING THE JOINTS.

13. ALL BEARING PADS SHALL BE 3/8" THICK MIN. OR AS REQUIRED CONFORM TO THEBY PRECAST SUPPLIER.

POST INSTALLED ANCHORS

1. ALL BOLTS INDICATED AS CONCRETE EXPANSION ANCHORS (C.E.A.) SHALL HAVE THE FOLLOWING AS THE MINIMUM ACCEPTABLE CRITERIA:

SIZE	MIN EMBEDMENT	ULTIMATE TENSILE LOAD	ULTIMATE SHEAR LOAD
1/2" DIA	3 1/2"	6500 LBS	8340 LBS
3/4" DIA	4 3/4"	12200 LBS	17450 LBS

   * THE ABOVE ULTIMATE LOADS ARE FOR 3000 PSI CONCRETE. ALLOWABLE LOADS ARE SIGNIFICANTLY REDUCED.

2. ALL CONCRETE EXPANSION ANCHORS SHALL BE GALVANIZED.

STATE OF TEXAS
STEVEN H. JOHNSTON
80631
REGISTERED PROFESSIONAL ENGINEER
12/16/97

NO.	REVISION	BY	DATE

NORTH TEXAS TOLLWAY AUTHORITY

ADDISON AIRPORT TUNNEL
BARRIER TOLL PLAZA

STRUCTURAL

GENERAL NOTES

AGUIRRE Corporation
15700 PARK CENTRAL DRIVE
16 TH FLOOR
DALLAS TEXAS 75251
TEL (972) 788-1606

SECTION XIII

CHECKED DATE 12/18/97 DESIGNED SHJ DATE 8/15/96
CHECKED DATE 12/18/97 SCALE NONE

CONTRACT NO. DNT-290 SHEET 34 OF 53

AT S0.1

H:\aqi-proj\9603-01\DWG\ADDISON\TAAT_S01.dwg

GENERAL STRUCTURAL NOTES – CONT'D

MASONRY:

1. ENGINEERED MASONRY SHALL BE DESIGNED AND CONSTRUCTED IN ACCORDANCE WITH THE FOLLOWING:

   "BUILDING CODE REQUIREMENTS FOR MASONRY STRUCTURES" (ACI 530–88/ASCE 5–88) BY THE AMERICAN CONCRETE INSTITUTE.

   "TECHNICAL NOTES ON BRICK CONSTRUCTION" BY THE BRICK INSTITUTE OF AMERICA.

2. MINIMUM COMPRESSIVE STRENGTH OF MASONRY UNITS:

   HOLLOW CONCRETE MASONRY. . ASTM C90 . . . 1900 PSI
   SOLID CONCRETE MASONRY . . . ASTM C145 . . 2000 PSI

3. MINIMUM COMPRESSIVE STRENGTH (F'C) AT 28 DAYS:

   TYPE S MORTAR. . . . . ASTM C270. . . 1800 PSI
   TYPE M MORTAR. . . . . ASTM C270. . . 2500 PSI
   GROUT. . . . . ASTM C476. . . . 2500 PSI

4. THE DESIGN COMPRESSIVE STRENGTH OF MASONRY (f'm) BASED ON THE COMPRESSIVE STRENGTH OF MASONRY UNITS AND MORTAR TO BE USED ARE AS FOLLOWS:

   CONCRETE MASONRY. . . . . f'm = 1500 PSI
   CLAY MASONRY. . . . . f'm = 1500 PSI

5. MASONRY REINFORCEMENT SHALL BE AS FOLLOWS:

   BOND BEAMS AND ALL VERTICAL REINFORCEMENT: SHALL COMPLY WITH ASTM A615–87 (GRADE 60) A MINIMUM YIELD STRENGTH OF 60,000 PSI.

   BED JOINT REINFORCEMENT:

   CONTINUOUS HORIZONTAL WIRE TIES SHALL BE PLACED SUCH THAT THE DISTANCE BETWEEN THE FACE OF THE MASONRY WALL AND THE PARALLEL WIRE IS NOT MORE THAN ONE INCH. THE PARALLEL WIRES SHALL CONFORM TO ASTM A82 AND HAVE A MINIMUM YIELD STRESS OF 70.0 KSI.

   FOR SINGLE WYTHE BLOCK PROVIDE:

   (2)#9 GAGE DEFORMED WIRES,(1) AT EACH FACE SHELL, TRUSS TIED.

6. UNLESS OTHERWISE SHOWN OR NOTED, REINFORCING STEEL SHALL BE LAPPED 48 BAR DIAMETERS, MINIMUM.

7. USE NORMAL WEIGHT CONCRETE MASONRY UNITS BELOW GRADE AND LIGHTWEIGHT CONCRETE MASONRY UNITS ABOVE GRADE UNLESS OTHERWISE SHOWN OR NOTED.

8. BEARINGS FOR BEAMS, LINTELS, JOISTS, ETC., SHALL BE SOLID MASONRY UNITS OR HOLLOW MASONRY UNITS WITH CORES SLUSHED SOLID WITH GROUT. SEE TYPICAL DETAILS.

9. ALL PRE–INSTALLED AND POST–INSTALLED ANCHORS TO BE PROVIDED IN CMU WALLS SHALL BE ANCHORED INTO FULLY GROUTED CELLS.

10. LOCATION OF VERTICAL CONTROL JOINTS IN MASONRY WALLS ARE INDICATED ON THE STRUCTURAL DRAWINGS.

11. VERTICAL WALL REINFORCING SHALL BE PROVIDED AND SPACED AS INDICATED ON THE DRAWINGS. ADDITIONAL VERTICAL REINFORCING SHALL BE PROVIDED AT EACH SIDE OF CONTROL JOINTS, CORNERS, INTERSECTIONS, FLANKS OF OPENINGS, AND ENDS OF WALLS.

12. PROVIDE LINTELS FOR ALL MASONRY OPENINGS AND RECESSES NOT OTHERWISE DETAILED OR SCHEDULED AS FOLLOWS:

    (1) L 5 X 3–1/2 X 5/16 FOR EACH 4" OF MASONRY WIDTH WITH A MAXIMUM SPAN OF 8'–0"
    (1) WT 4 X 9 FOR EACH 6" MASONRY WIDTH WITH A MAXIMUM SPAN OF 8'–0"
    (1) C 8 X 11.5 WITH PLATE 5/16 X 9 FOR 10" MASONRY WIDTH WITH A MAXIMUM SPAN OF 8'–0"

    FOR SPANS OF LESS THAN 2'–0", USE 5/16" PLATE X MASONRY WIDTH LESS 1".

13. PROVIDE MINIMUM 8" BEARING FOR BEAMS OR LINTELS WITH SPANS 4'–0" OR LARGER AND 6" BEARING ON SPANS LESS THAN 4'–0", UNLESS OTHERWISE DETAILED ON DRAWINGS.

14. ALL BOND BEAMS SHALL HAVE 2 – #5 CONTINUOUS UNLESS NOTED OTHERWISE.

STRUCTURAL STEEL:

1. ALL STRUCTURAL STEEL SHALL BE DESIGNED AND CONSTRUCTED IN ACCORDANCE TO AISC "SPECIFICATION FOR THE DESIGN, FABRICATION, AND ERECTION OF STRUCTURAL STEEL FOR BUILDINGS, ALLOWABLE STRESS DESIGN," ASD NINTH EDITION.

2. ALL STRUCTURAL STEEL UNLESS OTHERWISE NOTED SHALL CONFORM TO THE FOLLOWING ASTM SPECIFICATIONS:

   STRUCTURAL SHAPES. A36
   PLATE AND BARS. A36
   STRUCTURAL STEEL PIPE A501
   STRUCTURAL STEEL TUBING . . . . . A500 GRADE B

3. ALL BEAM CONNECTIONS NOT OTHERWISE DETAILED OR CALLED OUT SHALL BE STANDARD FRAMED CONNECTIONS DESIGNED TO SUPPORT NOT LESS THAN 50% OF THE TOTAL UNIFORM LOAD FOR THE BEAM SHAPE AND SPAN. PROVIDE A 2 ROW CONNECTION MINIMUM FOR BEAMS OF 10" DEPTH OR LESS AND A 3 ROW CONNECTION MINIMUM FOR BEAMS OF 12" DEPTH OR LARGER.

4. SHOP CONNECTIONS MAY BE WELDED OR HIGH STRENGTH BOLTED AT FABRICATOR'S OPTION, SUBJECT TO ENGINEER'S APPROVAL.

5. ALL BOLTED CONNECTIONS FOR STRUCTURAL STEEL SHALL CONFORM TO AISC "SPECIFICATION FOR STRUCTURAL JOINTS USING ASTM A325 OR A490 BOLTS," DATED NOV. 13, 1985.

6. UNLESS OTHERWISE SHOWN OR NOTED ON THE DRAWINGS, ALL BOLTED CONNECTIONS SHALL BE MADE WITH 3/4" DIAMETER HIGH STRENGTH BOLTS, BEARING TYPE WITH THREADS IN THE SHEAR PLANE, CONFORMING TO ASTM A325–N.

7. ALL WELDED CONNECTIONS FOR STRUCTURAL STEEL SHALL CONFORM TO AWS "STRUCTURAL WELDING CODE," D1.1 – 90.

8. UNLESS OTHERWISE SHOWN OR NOTED ON THE DRAWINGS, ALL WELDED CONNECTIONS SHALL BE MADE WITH E70–XX ELECTRODES. SHIELDED METAL ARC WELDING PROCESS SHALL USE LOW HYDROGEN ELECTRODES.

9. PROVIDE ALL BOLT HOLES, STUDS, ANCHORS, AND CLIP ANGLES REQUIRED TO ATTACH OTHER MATERIALS AS SHOWN ON THE DRAWINGS.

10. ANCHOR BOLTS SHALL CONFORM TO ASTM A307 AND SHALL BE PLACED WITHIN THE FOLLOWING TOLERANCES:

    TOP OF ANCHOR BOLT ELEVATION . . . . . (+) 1" TO (–) 3/8"
    OUT OF POSITION OF ANCHOR BOLTS . . . . (+/–) 1/8"
    ELEVATION OF FINISHED CONCRETE SURFACE FOR BEARING . . . . . (+/–) 1/8"

11. ALL GROUT BELOW ALL COLUMN BASE PLATES SHALL BE NON–SHRINK NON–METALLIC GROUT UNLESS OTHERWISE SHOWN OR NOTED.

METAL DECK:

1. ALL METAL DECK SHALL BE DETAILED, FABRICATED AND INSTALLED IN ACCORDANCE WITH THE STEEL DECK INSTITUTE SPECIFICATIONS DATED 1987.

2. ROOF DECK SHALL BE SCREWED TO SUPPORTS WITH A 36/5 PATTERN AND 3 – #10 SCREW SIDELAPS PER SPAN.

3. ALTERNATE FASTENER TYPES MAY BE USED ONLY WITH THE APPROVAL OF THE ENGINEER.

COLD–FORMED METAL FRAMING:

1. STRUCTURAL COLD–FORMED METAL (LIGHT–GAGE) FRAMING SHALL BE DESIGNED AND CONSTRUCTED IN ACCORDANCE WITH THE AISI "SPECIFICATION FOR COLD–FORMED STEEL STRUCTURAL MEMBERS", DATED MARCH 1986.

2. ALL STRUCTURAL LIGHT–GAGE JOISTS AND STUDS SHALL CONFORM TO THE FOLLOWING MINIMUM YIELD STRENGTH PER ASTM SPECIFICATIONS:

   12, 14, 16 GAGE . . . 50,000 PSI
   18, 20 GAGE . . . . . 33,000 PSI

3. FULL–HEIGHT DOUBLE STUDS SHALL BE PROVIDED AT THE ENDS OF PARTITIONS, AT ALL WALL OPENINGS AND AT OTHER LOCATIONS SHOWN ON DRAWINGS.

4. PROVIDE STUD WALL BRIDGING ACCORDING TO MANUFACTURERS LATEST RECOMMENDATIONS.

5. ANCHOR STUD TRACKS TO SUPPORTS WITH LOW – VELOCITY POWER – DRIVEN FASTENERS WITH A MINIMUM SHANK DIAMETER OF 0.145", AND MINIMUM PENETRATION OF 1–1/8". SPACE FASTENERS AT 16" O.C. MAXIMUM.

DESIGN CRITERIA:

1. THE STRUCTURAL ENGINEERING DESIGN IS BASED ON AND IN ACCORDANCE WITH THE FOLLOWING CODE(S):

   UNIFORM BUILDING CODE – 1991
   ASCE 7–95 – "MINIMUM DESIGN LOADS FOR BUILDINGS AND OTHER STRUCTURES"

2. LIVE LOADS

   A. ROOF LOADS . . . . . .20 PSF
   B. WIND LOADS
      1.) WIND SPEED (V). . . . . 90 MPH
      2.) IMPORTANCE FACTOR (I). . . . . .1.15 CANOPY
      . . . . . .1.0 BOOTH
      3.) EXPOSURE CATEGORY C

2. SEISMIC

   A. Aa < 0.05
   B. Av < 0.05
   C SPC A

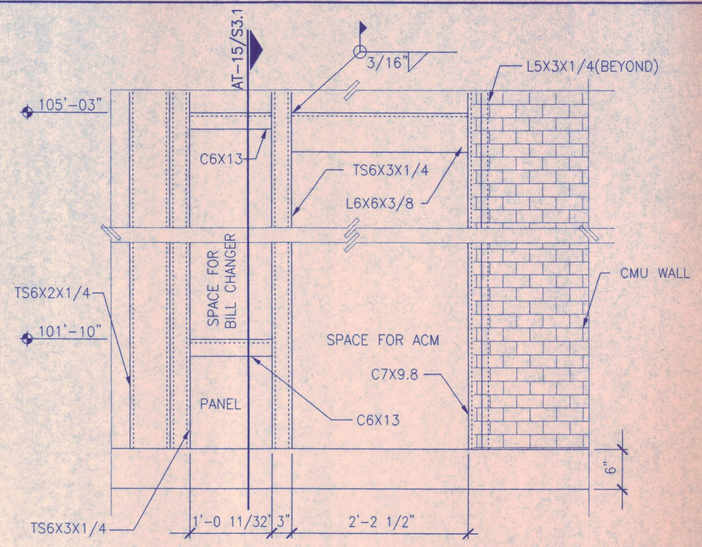

3 FRONT VIEW
SCALE: 1/2" = 1'–0" SXM10

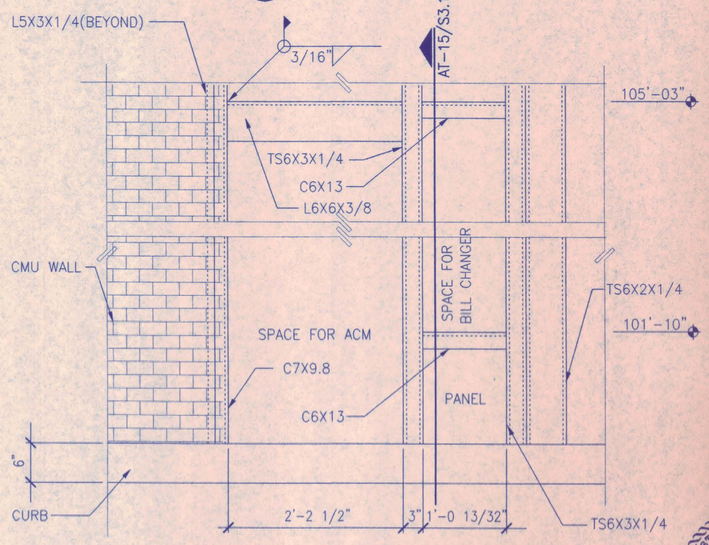

4 FRONT VIEW
SCALE: 1/2" = 1'–0" SXM11

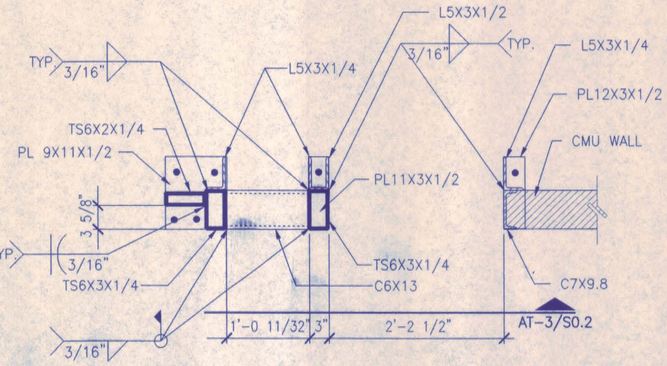

1 PLAN
SCALE: 1/2" = 1'–0" sxm07

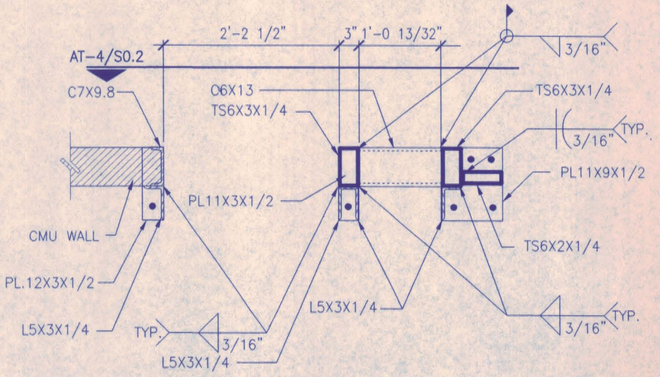

2 PLAN
SCALE: 1/2" = 1'–0" sxm08

AT S0.2

NO.	REVISION	BY	DATE

NORTH TEXAS TOLLWAY AUTHORITY
ADDISON AIRPORT TUNNEL BARRIER TOLL PLAZA

STRUCTURAL

GENERAL NOTES – CONT'D

AGUIRRE Corporation
12700 PARK CENTRAL DRIVE
16 TH FLOOR
DALLAS TEXAS 75251
TEL (972) 788-1008

SECTION XIII

CHECKED DATE 12/18/97
CHECKED DATE 12/18/97
DESIGNED SHJ DATE 8/15/96
SCALE NONE

CONTRACT NO. DNT–290 SHEET 35 OF 53

H:\aai–proj\9603–01\DWG\ADDISON\TAAT_S02.dwg

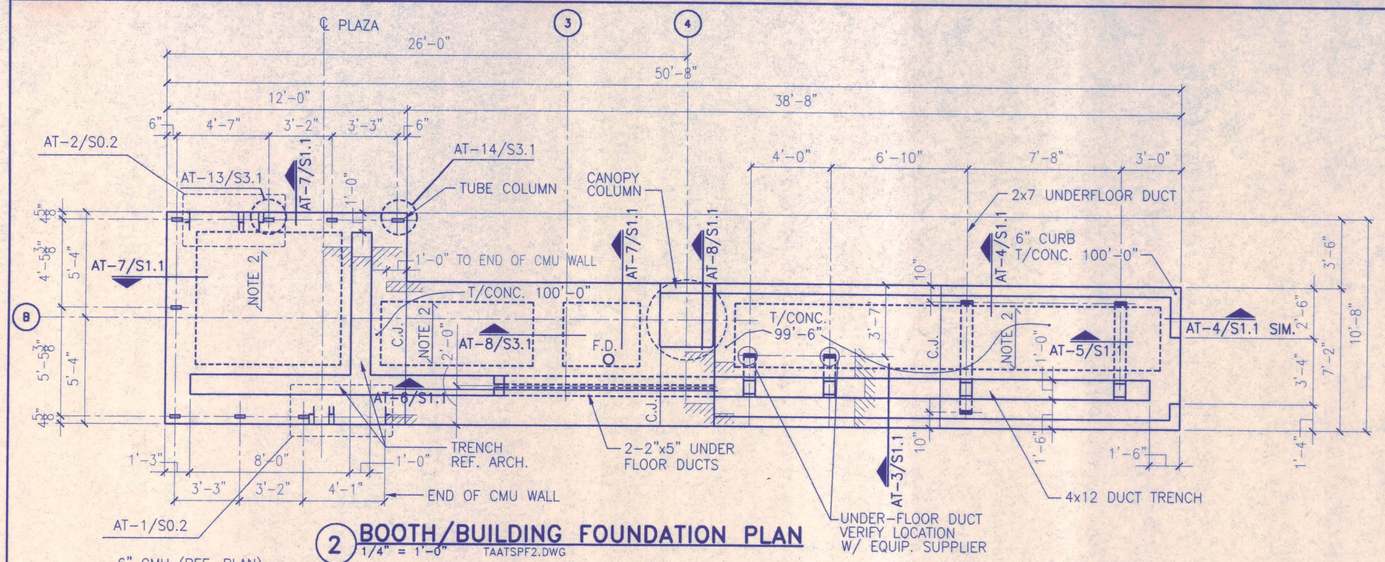

2 BOOTH/BUILDING FOUNDATION PLAN

1/4" = 1'-0" TAATSPF2.DWG

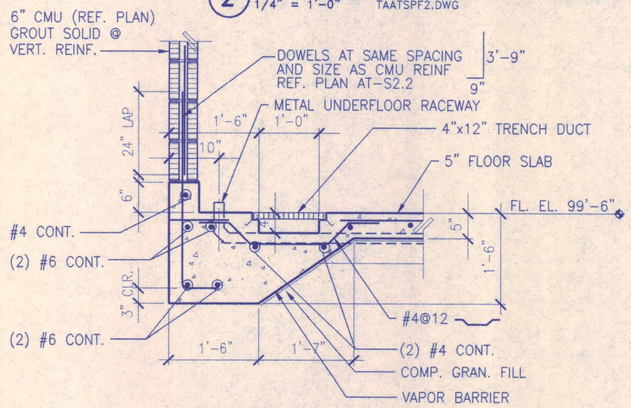

3 SECTION

3/4" = 1'-0" TAATSXM5.DWG

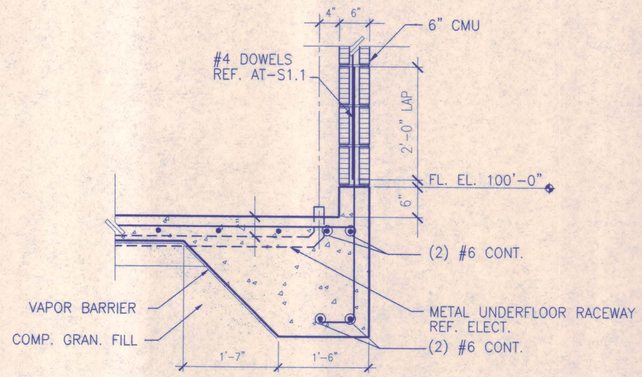

4 SECTION

3/4" = 1'-0" TAATSXM5.DWG

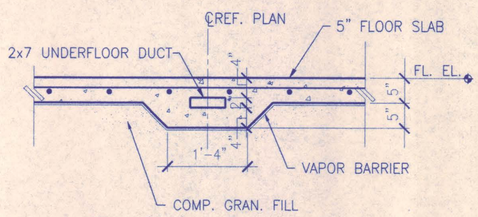

5 SECTION

3/4" = 1'-0" TAATSXM5.DWG

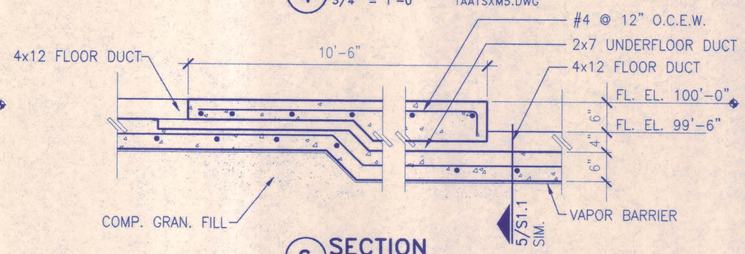

6 SECTION

3/4" = 1'-0" TAATSXM5.DWG

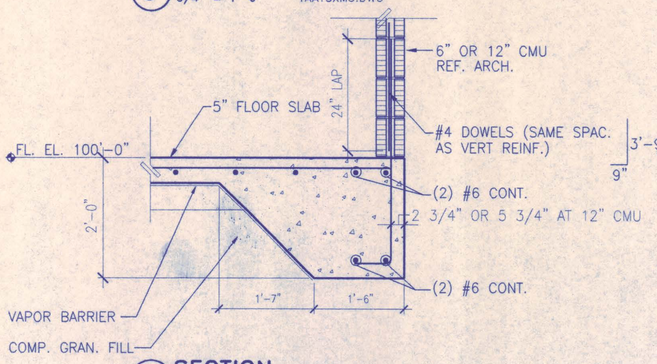

7 SECTION

3/4" = 1'-0" TAATSXM5.DWG

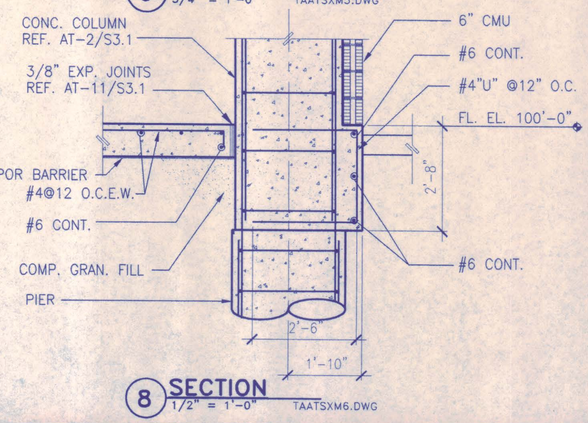

8 SECTION

1/2" = 1'-0" TAATSXM6.DWG

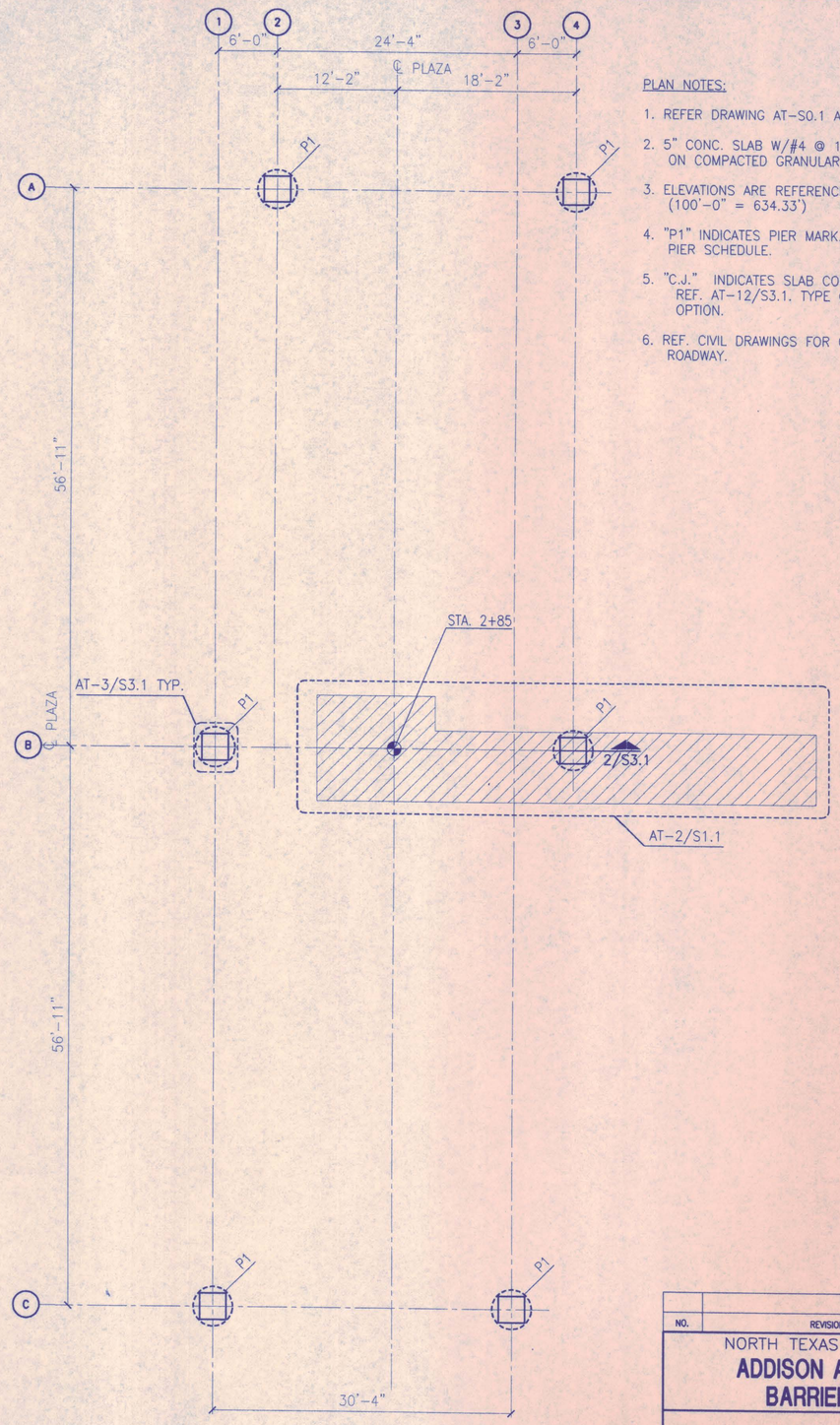

1 CANOPY FOUNDATION PLAN

1/8" = 1'-0" TAATSPF1.DWG

PLAN NOTES:

1. REFER DRAWING AT-S0.1 AND AT-S0.2 FOR GENERAL NOTES.
2. 5" CONC. SLAB W/#4 @ 12" E.W. ON 8 MIL. VAPOR BARRIER ON COMPACTED GRANULAR FILL.
3. ELEVATIONS ARE REFERENCED TO FINISHED FLOOR ELEVATIONS. (100'-0" = 634.33')
4. "P1" INDICATES PIER MARK. REFER TO DRAWING AT-S3.1 FOR PIER SCHEDULE.
5. "C.J." INDICATES SLAB CONTROL JOINT OR CONSTRUCTION JOINT. REF. AT-12/S3.1. TYPE OF JOINT USED IS CONTRACTOR'S OPTION.
6. REF. CIVIL DRAWINGS FOR CENTERLINES OF PLAZA AND ROADWAY.

NORTH

AT S1.1

STATE OF TEXAS
STEVEN H. JOHNSTON
80631
REGISTERED PROFESSIONAL ENGINEER
12/16/97

NO.	REVISION	BY	DATE

NORTH TEXAS TOLLWAY AUTHORITY

ADDISON AIRPORT TUNNEL BARRIER TOLL PLAZA

STRUCTURAL FOUNDATION PLANS AND DETAILS

AGUIRRE corporation
12700 PARK CENTRAL DRIVE
15 TH FLOOR
DALLAS TEXAS 75251
TEL (972) 788-1808

SECTION XIII

CHECKED SHJ DATE 12/18/97 DESIGNED SHJ DATE 8/15/96
CHECKED DATE 12/18/97 SCALE AS NOTED
CONTRACT NO. DNT-290 SHEET 36 OF 53

H:\aai-proj\9603-01\DWG\ADDISON\TAAT_S11.dwg
Tue Dec 9 09:57:52 1997

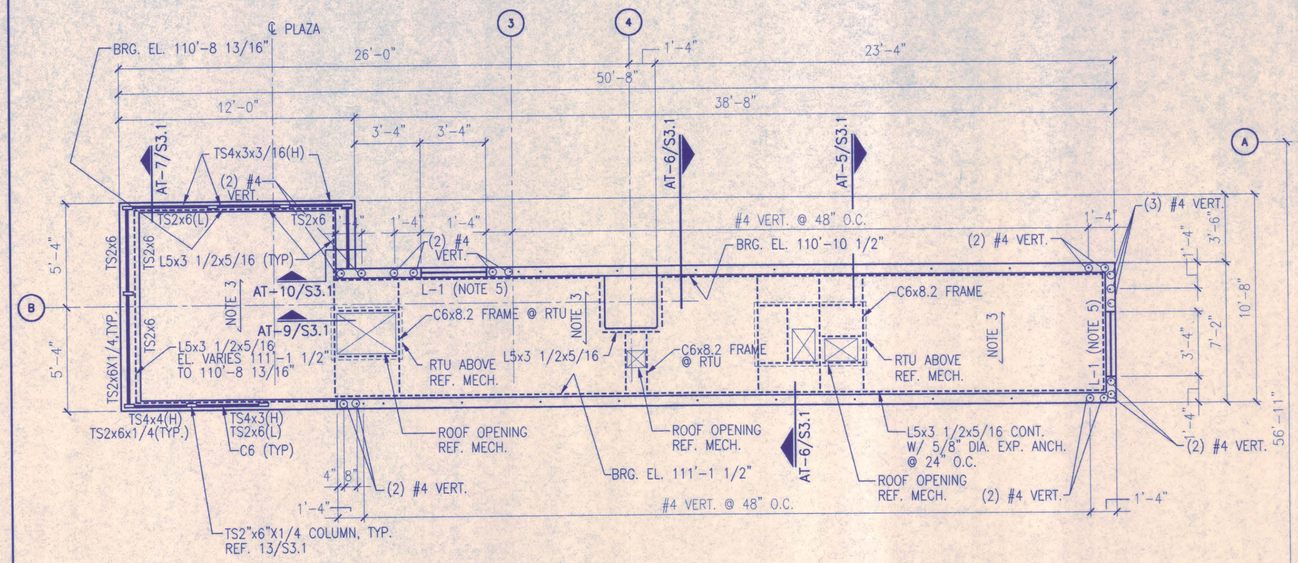

2 BOOTH/BUILDING ROOF FRAMING PLAN

1/4" = 1'-0" TAATSPR2.DWG

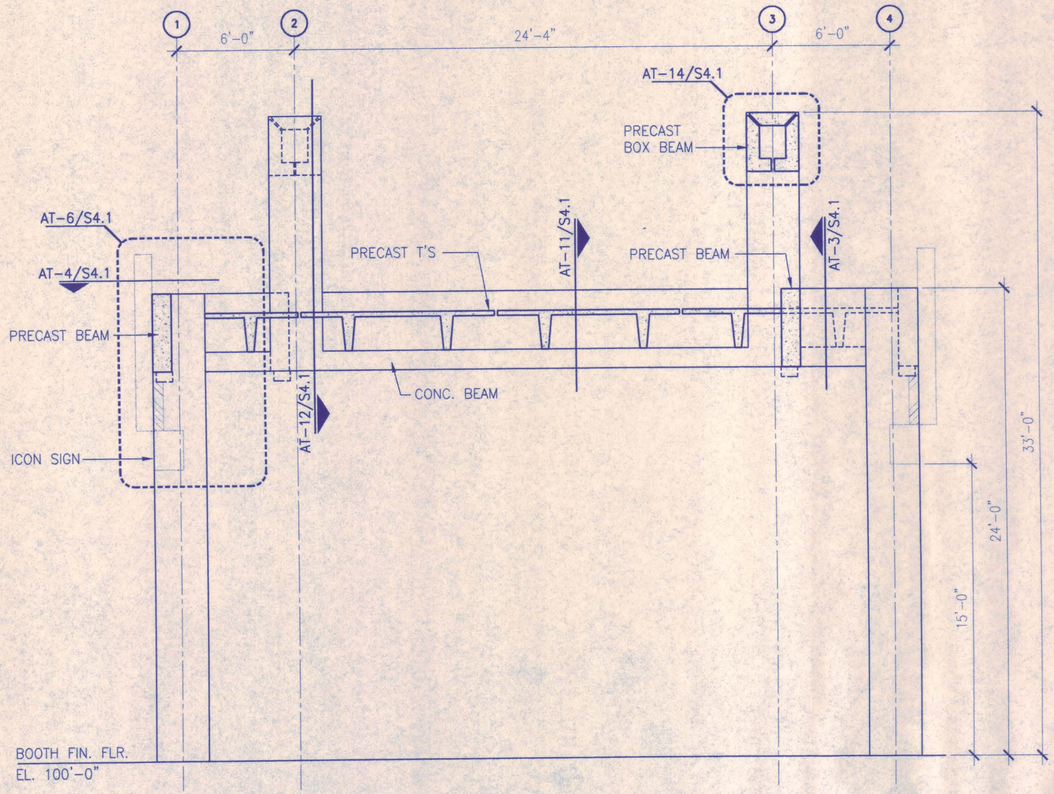

3 SECTION

1/4" = 1'-0" TAATSXM4.DWG

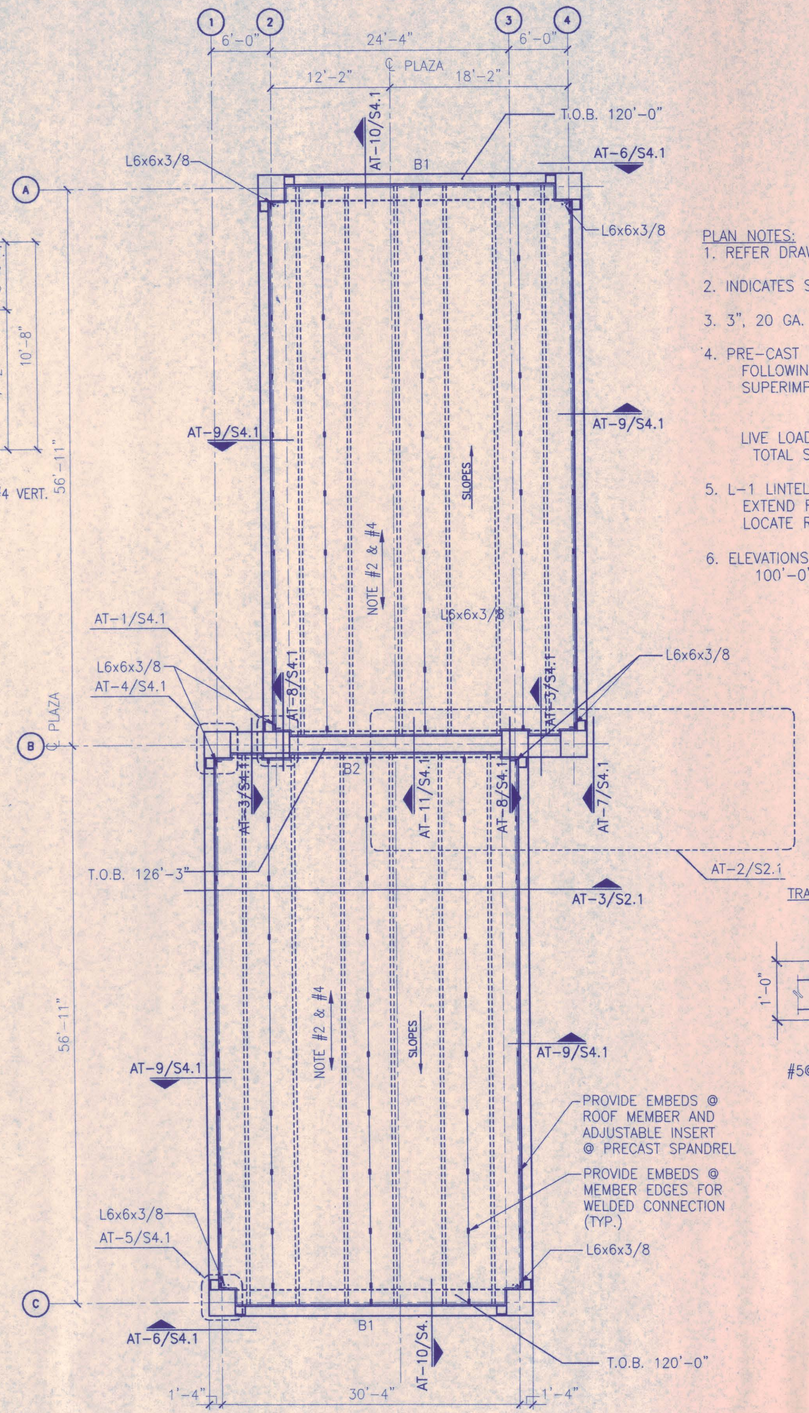

1 CANOPY ROOF FRAMING PLAN

1/8" = 1'-0" TAATSPR1.DWG

PLAN NOTES:

1. REFER DRAWINGS AT-S0.1 AND AT-S0.2 FOR GENERAL NOTES.
2. INDICATES SPAN DIRECTION OF 24" PRECAST CONCRETE DOUBLE TEE.
3. 3", 20 GA. GALVANIZIED METAL ROOF DECK. ARROW INDICATES SPAN.
4. PRE-CAST DOUBLE TEE'S SHALL BE DESIGNED TO SUPPORT THE FOLLOWING LOADS IN ADDITION TO THE WEIGHT OF THE PRE-CAST:

SUPERIMPOSED DEAD LOADS	ROOFING AND INSULATION	10 psf
	MECHANICAL	15 psf
		25 psf
LIVE LOAD		20 psf
TOTAL SUPERIMPOSED LOAD		45 psf

5. L-1 LINTEL SHALL BE A 6" CMU LINTEL x 8" HIGH BLOCK W/1 - #5. EXTEND REINF 8" MIN. PAST OPENING @ EA. SIDE. GROUT LINTEL SOLID. LOCATE REINF 2" FROM BOTTOM EDGE OF CMU LINTEL.
6. ELEVATIONS GIVEN ARE REFERENCED TO FINISHED FLOOR ELEVATION. 100'-0" (= 634.33')

TRANSFORMER, GENERATOR, COMMUNICATION CABINET PAD

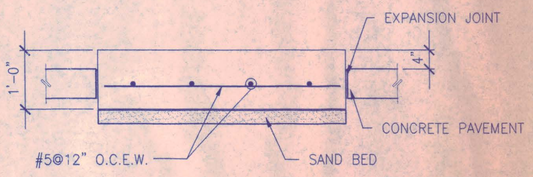

4 SECTION

3/4" = 1'-0" TAATSXM13.DWG

STATE OF TEXAS
STEVEN H. JOHNSTON
80631
REGISTERED PROFESSIONAL ENGINEER
12/16/97

NO.	REVISION	BY	DATE

NORTH TEXAS TOLLWAY AUTHORITY

ADDISON AIRPORT TUNNEL BARRIER TOLL PLAZA

STRUCTURAL

FRAMING PLANS

AGUIRRE corporation
12700 PARK CENTRAL DRIVE
15 TH FLOOR
DALLAS TEXAS 75251
TEL (972) 788-1508

SECTION XIII

CHECKED DATE 12/18/97
CHECKED DATE 12/18/97
DESIGNED SHJ DATE 8/15/96
SCALE AS NOTED

CONTRACT NO. DNT-290 SHEET 37 OF 53

NORTH

AT S2.1

H:\aoi-proj\9603-01\DWG\ADDISON\TAAT_S21.dwg
Fri Dec 12 10:18:47 1997

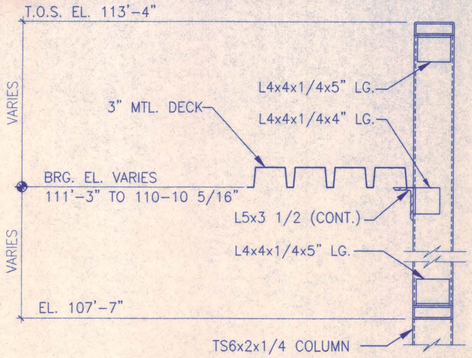

10 BOOTH COLUMN
1" = 1'-0"

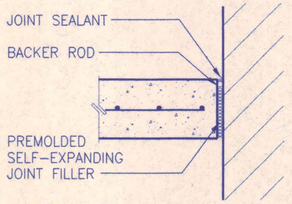

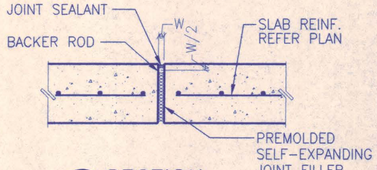

11 SECTION
N.T.S.

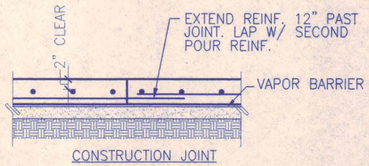

CONSTRUCTION JOINT

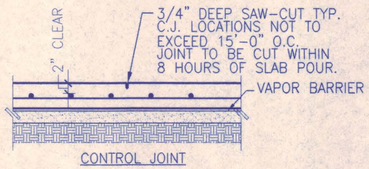

CONTROL JOINT

12 SECTION
N.T.S.

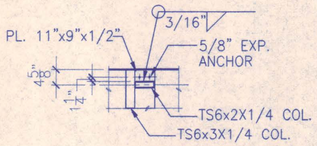

13 SECTION
N.T.S.

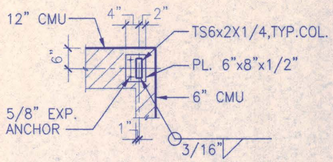

14 SECTION
N.T.S.

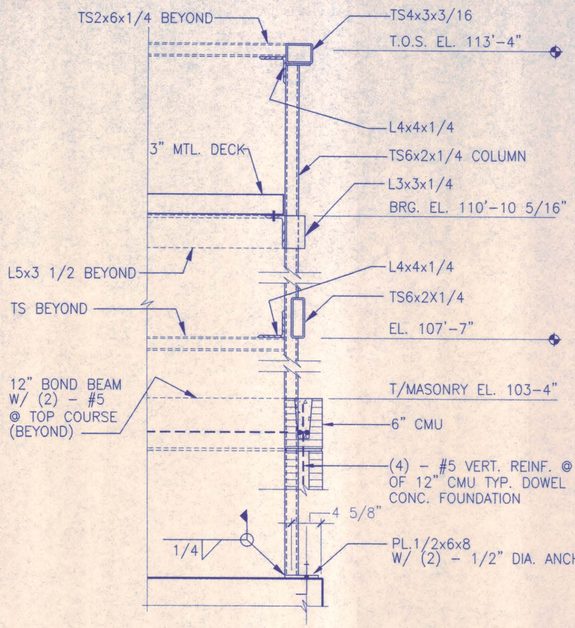

7 COLUMN AT CORNER OF BOOTH
1" = 1'-0"

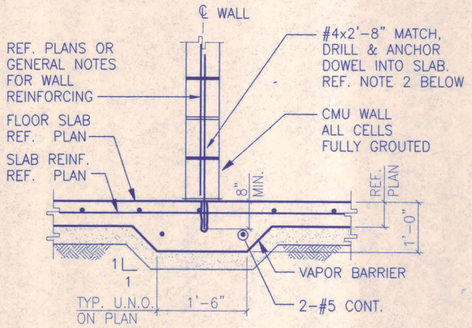

NOTES

1. REF. ARCHITECTURAL DRAWINGS FOR CMU WALL LOCATIONS AND DIMENSIONS.
2. VERTICAL WALL REINFORCING FOR CMU WALL SHALL BE ANCHORED INTO THE FLOOR SLAB USING THE HILTI C-100 CHEMICAL ANCHORING SYSTEM OR APPROVED EQUAL.

8 SECTION
N.T.S.

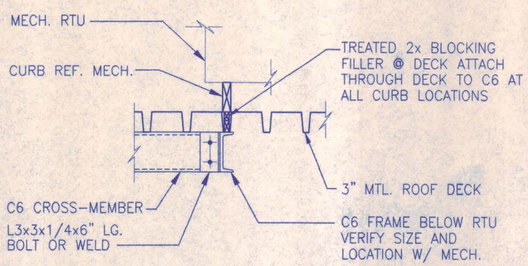

9 SECTION
1" = 1'-0"

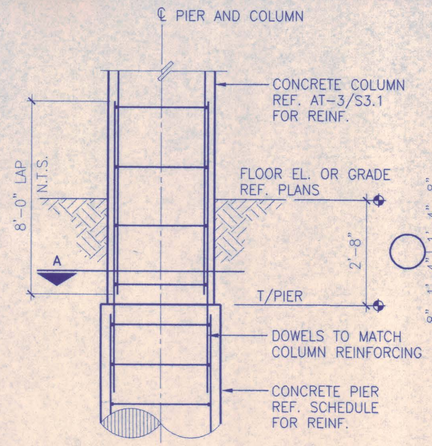

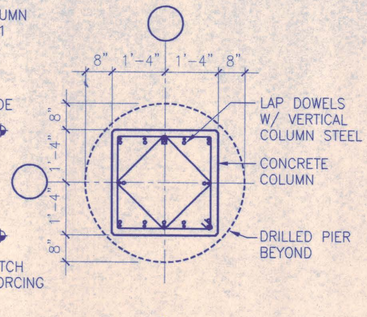

2 PIER AND COL. DETAIL
1/2" = 1'-0"

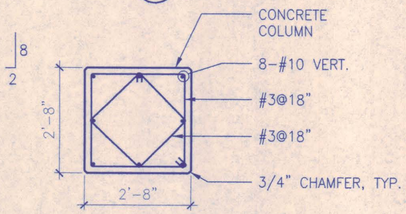

COLUMNS A-2, A-4, C-1, C-3, B-2, B-3

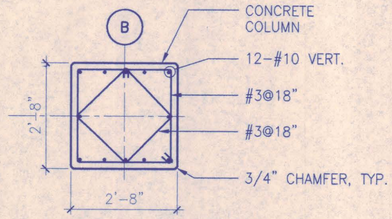

COLUMNS B-1, B-4

3 COLUMN DETAILS
N.T.S.

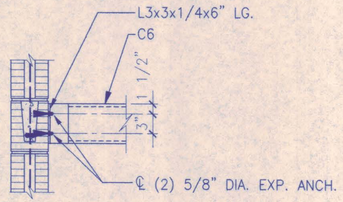

5 SECTION
1" = 1'-0"

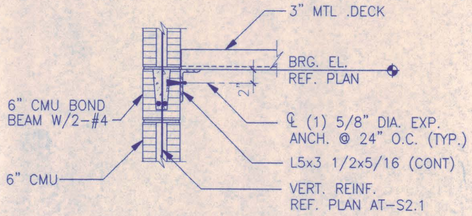

6 SECTION
1" = 1'-0"

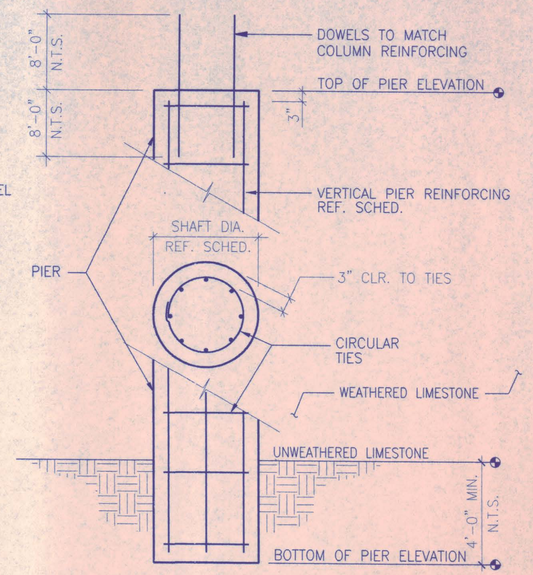

PIER NOTES:

1. USE 4" TO 6" SLUMP CONCRETE AND 3/4" AGGREGATE TO FACILITATE CONCRETE PLACEMENT, VIBRATE ONLY TOP 5' OF PIER.
2. TOP AND BOTTOM OF PIER ELEVATIONS GIVEN ARE FOR BIDDING PURPOSES ONLY.

PIER SCHEDULE

MARK	SHAFT DIA. (IN.)	REINFORCING		TOP OF PIER ELEVATION (FT.)	BOTTOM OF PIER ELEVATION (FT.) *
		VERT.	CIRCULAR TIES		
P1	48"	12-#10	#4@18"	97'-4"	80'-0"+/-

* FOR BIDDING PURPOSES ONLY.

1 PIER DETAIL
NONE

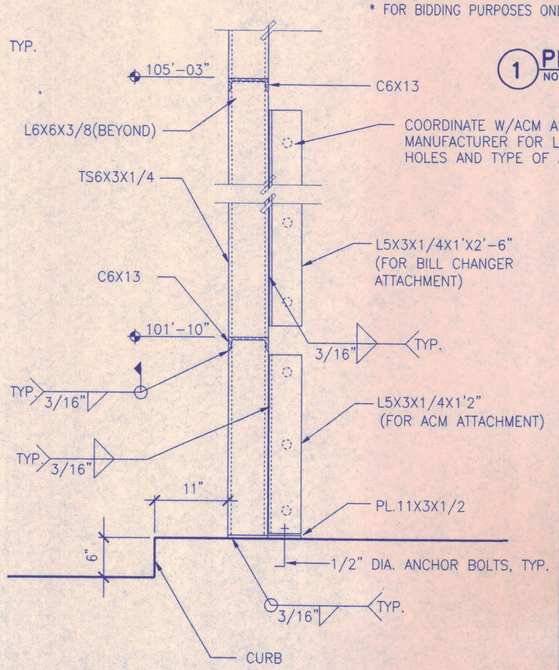

15 SECTION
1" = 1'-0"
SXM12

AT S3.1

STATE OF TEXAS
STEVEN H. JOHNSTON
80631
REGISTERED PROFESSIONAL ENGINEER
12/18/97

NO.	REVISION	BY	DATE

NORTH TEXAS TOLLWAY AUTHORITY

ADDISON AIRPORT TUNNEL BARRIER TOLL PLAZA

STRUCTURAL

SECTIONS AND DETAILS

AGUIRRE Corporation
12700 PARK CENTRAL DRIVE
16 TH FLOOR
DALLAS TEXAS 75251
TEL (972) 788-1808

SECTION XIII

CHECKED DATE 12/18/97
CHECKED DATE 12/18/97
DESIGNED SHJ DATE 8/15/96
SCALE 1/2" = 1'-0"

CONTRACT NO. DNT-290 SHEET 38 OF 53

H:\aai-proj\9603-01\DWG\ADDISON\TAAT_S31.dwg

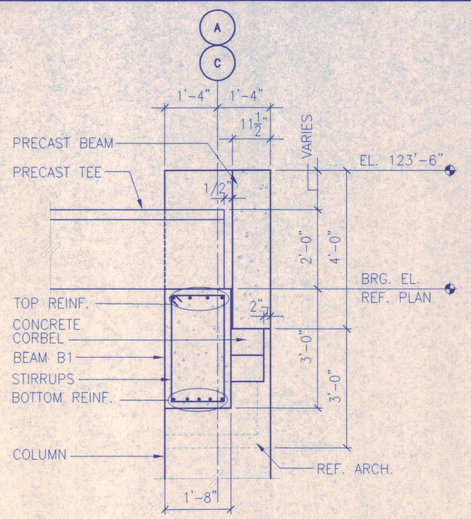

10 SECTION
SCALE: 1/2" = 1'-0"

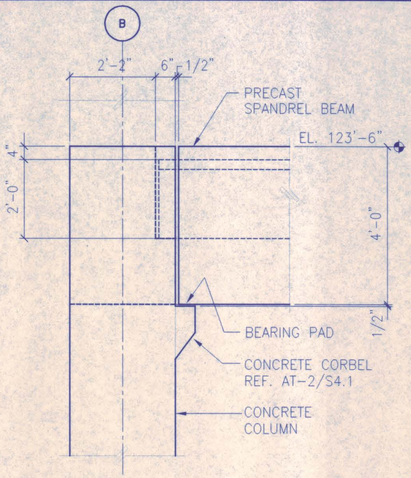

7 SECTION
SCALE: 1/2" = 1'-0"

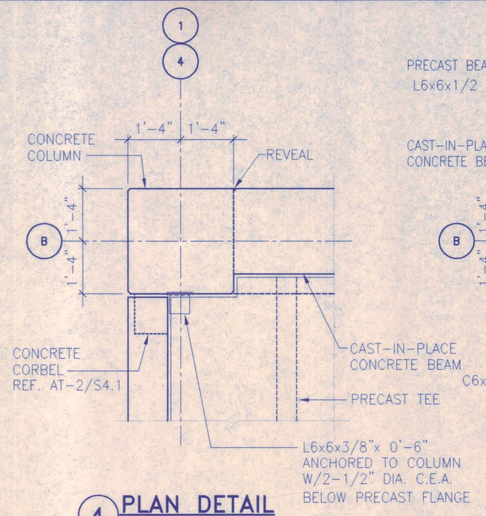

4 PLAN DETAIL
SCALE: 1/2" = 1'-0"

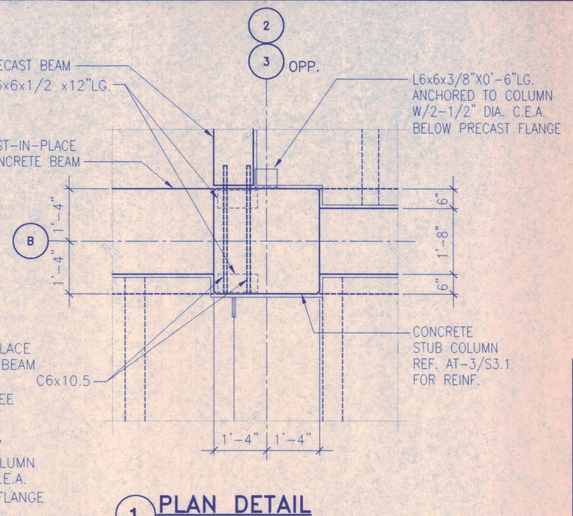

1 PLAN DETAIL
SCALE: 1/2" = 1'-0"

BEAM SCHEDULE

MARK	DETAIL	STIRRUPS TYPE	STIRRUPS SPACING @ EA. END
B1	℄ SUPPORT; 4-#8; 4-#8; 5-#8	A	1 @ 3", R @ 12"
B2	6-#8; 6-#8; 4-#8; 8-#8	B/B'	1 @ 3", R @ 6"

NOTE: SEE DETAIL FOR DIMENSIONS OF BEAM

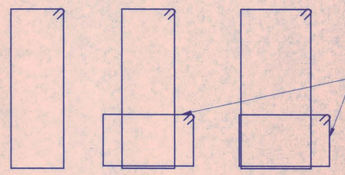

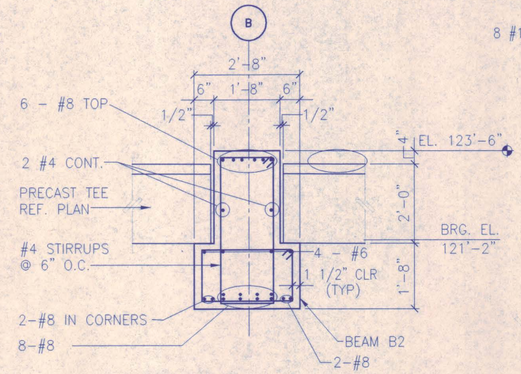

11 SECTION
SCALE: 1/2" = 1'-0"

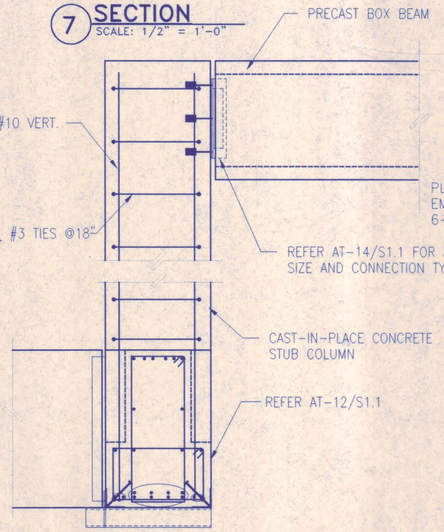

8 SECTION
SCALE: 1/2" = 1'-0"

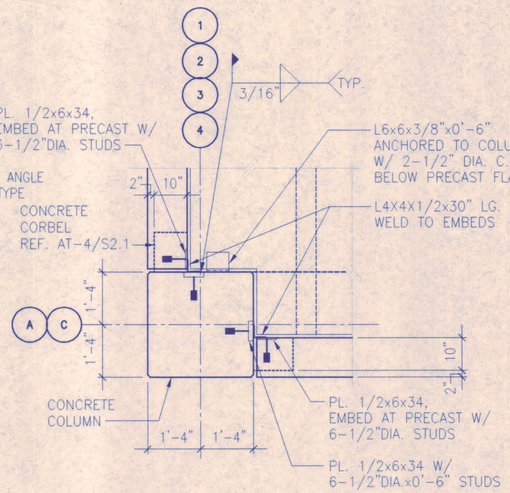

5 PLAN DETAIL
SCALE: 1/2" = 1'-0"

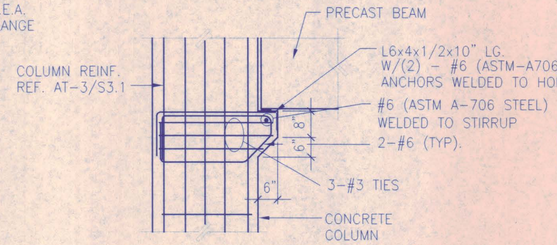

2 CONCRETE CORBEL DETAIL
SCALE: 1/2" = 1'-0"

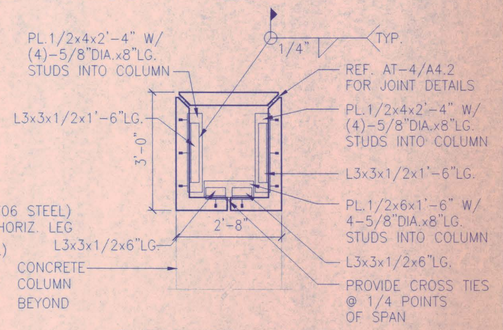

14 BOX BEAM DETAIL
SCALE: 1/2" = 1'-0"

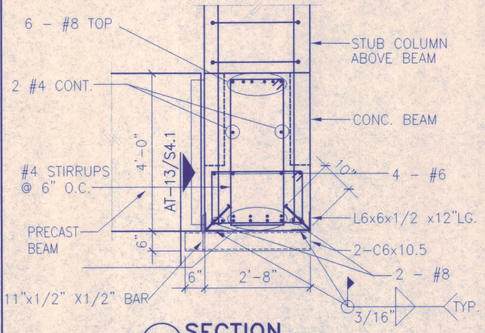

12 SECTION
SCALE: 1/2" = 1'-0"

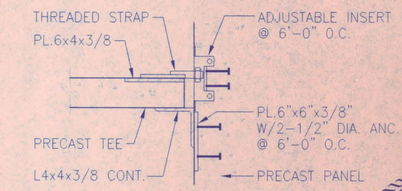

15 INSERT DETAIL
SCALE: 1 1/2" = 1'-0"

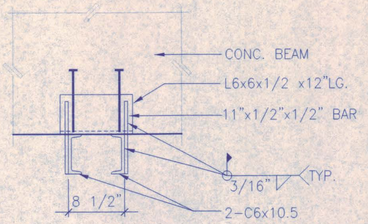

13 SECTION
SCALE: 1" = 1'-0"

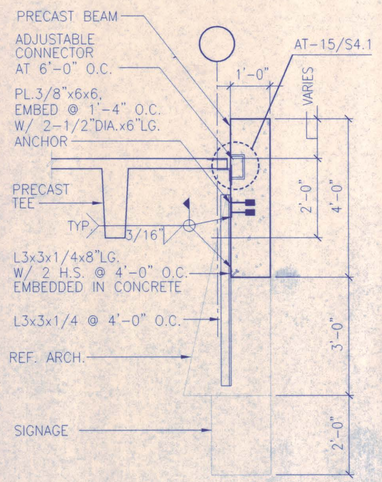

9 SECTION
SCALE: 1/2" = 1'-0"

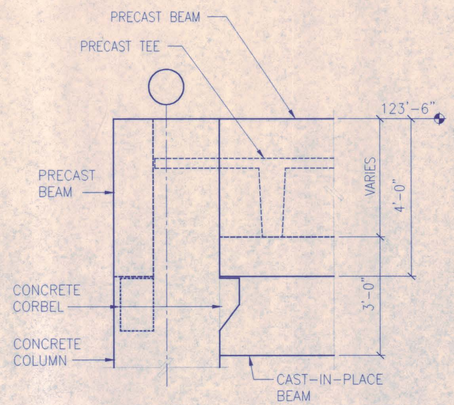

6 SECTION
SCALE: 1/2" = 1'-0"

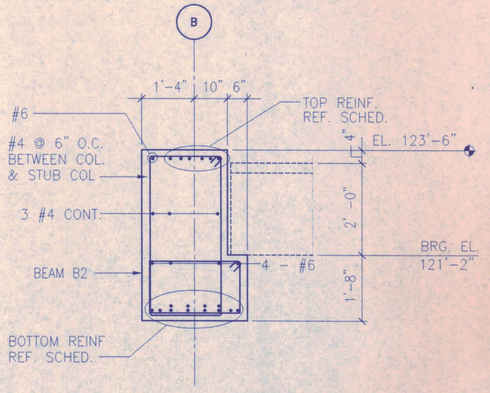

3 SECTION
SCALE: 1/2" = 1'-0"

AT S4.1

STEVEN H. JOHNSTON
80631
REGISTERED PROFESSIONAL ENGINEER
STATE OF TEXAS
12/16/97

NO.	REVISION	BY	DATE

NORTH TEXAS TOLLWAY AUTHORITY

ADDISON AIRPORT TUNNEL
BARRIER TOLL PLAZA

STRUCTURAL

SECTIONS AND DETAILS

AGUIRRE Incorporation
12700 PARK CENTRAL DRIVE
16 TH FLOOR
DALLAS TEXAS 75251
TEL (972) 788-1508

SECTION XIII

CHECKED SHJ DATE 12/18/97 DESIGNED SHJ DATE 8/15/96
CHECKED DATE 12/18/97 SCALE 1/2" = 1'-0"
CONTRACT NO. DNT-290 SHEET 39 OF 53

H:\aai-proj\9603-01\DWG\ADDISON\TAAT_S41.dwg
Tue Dec 16 15:17:10 1997

MECHANICAL SYMBOLS

ALL SYMBOLS SHOWN MAY NOT APPEAR IN ALL DRAWINGS.
SYMBOLS ARE SHOWN SCHEMATICALLY AND MAY NOT BE TO SCALE.

SYMBOL	DESCRIPTION
	NEW EQUIPMENT
	EXISTING EQUIPMENT
	EXISTING EQUIPMENT TO BE REMOVED OR RELOCATED
	NEW DUCT
	EXISTING DUCT
	EXISTING DUCT TO BE REMOVED OR RELOCATED
	NEW SUPPLY DIFFUSER, SQUARE NECK
	EXISTING SUPPLY DIFFUSER TO BE REMOVED OR RELOCATED
	NEW R/A OR EXHAUST GRILLE
	EXISTING R/A OR EXHAUST GRILLE
	EXISTING R/A OR EXHAUST GRILLE TO BE REMOVED OR RELOCATED
	NEW SLOT DIFFUSER
	FLEXIBLE DUCT
	EXISTING SLOT DIFFUSER
	EXISTING SLOT DIFFUSER TO BE REMOVED OR RELOCATED
	SUPPLY DUCT RISER
	RETURN, EXHAUST OR OUTSIDE AIR DUCT RISER
	SIDEWALL SUPPLY GRILLE OR REGISTER WITH AIR EXTRACTOR
T	THERMOSTAT
T	EXISTING THERMOSTAT TO BE REMOVED OR RELOCATED
	45° PRESSURE TAP W/ VOLUME DAMPER
	CONICAL TAP WITH VOLUME DAMPER
	MANUAL VOLUME DAMPER
FD	FIRE DAMPER
M	MOTORIZED DAMPER
SD	SMOKE DAMPER
FSD	COMBINATION FIRE & SMOKE DAMPER
CHS	CHILLED WATER SUPPLY PIPE
CHR	CHILLED WATER RETURN PIPE
H/CHS	HEATING OR CHILLED WATER SUPPLY PIPE
H/CHR	HEATING OR CHILLED WATER RETURN PIPE
CWS	CONDENSER WATER SUPPLY PIPE
CWR	CONDENSER WATER RETURN PIPE
RL	REFRIGERANT LIQUID PIPE
RS	REFRIGERANT SUCTION LINE
HG	REFRIGERANT HOT GAS LINE
HWS	HEATING WATER SUPPLY
HWR	HEATING WATER RETURN
	DOMESTIC COLD WATER
	DOMESTIC HOT WATER
	DOMESTIC HOT WATER RETURN
SAN	SANITARY WASTE LINE (UNDERFLOOR)
SAN	SANITARY WASTE LINE (ABOVE FLOOR)
CD	CONDENSATE DRAIN
P	PUMPED SANITARY LINE
	VENT LINE
SD	STORM DRAIN PIPING (UNDERFLOOR)
F	FIRE PROTECTION PIPING
D	DRAIN PIPING
RD	ROOF DRAIN LINE
FOS	FUEL OIL SUPPLY
FOR	FUEL OIL RETURN

SYMBOL	DESCRIPTION
HPS	HIGH PRESSURE STEAM
LPS	LOW PRESSURE STEAM
LPC	LOW PRESSURE CONDENSATE
OD	OVERFLOW DRAIN LINE
	DIRECTION OF SLOPE
	DIRECTION OF FLOW
	EXPANSION LOOP
	AUTOMATIC 2-WAY CONTROL VALVE
	AUTOMATIC 3-WAY CONTROL VALVE
	PLUG VALVE/BALANCING COCK
	SOLENOID VALVE
	GATE VALVE
	BUTTERFLY VALVE
	BALL VALVE
	GLOBE VALVE
	CHECK VALVE
	TEMPERATURE AND PRESSURE RELIEF VALVE
	BUTTERFLY VALVE MOTORIZED
	HYDRAULIC SHOCK ARRESTOR
	VALVE IN VERTICAL
	UNION
	P-TRAP
FD	FLOOR DRAIN W/ P-TRAP
	HUB DRAIN
CO	FLOOR CLEANOUT OR GRADE CLEANOUT
CO	CLEANOUT OR WALL CLEANOUT
	TWO WAY CLEANOUT
	PETE'S PLUG
	GAUGE COCK
	THERMOMETER
	THERMOMETER WELL
	STRAINER WITH BLOW-DOWN VALVE
	PRESSURE GAUGE WITH STOP COCK
	BRANCH CONNECTION OUT OF TOP
	BRANCH CONNECTION OUT OF BOTTOM
	BRANCH CONNECTION OUT OF SIDE
	NEW CONNECTION TO EXISTING PIPING
	CONCENTRIC REDUCER
	ECCENTRIC REDUCER
	PIPING DOWN
	PIPING UP -OR- PIPING UP & DOWN
	CAP ON END OF PIPE
HB	HOSE BIBB OR WALL HYDRANT (SEE ALSO NFWH)
VB	VALVE BOX IN PAVEMENT OR GRADE
DS	ROOF DRAIN DOWNSPOUT
	FIRE PROTECTION RISER, PUMP
FHC	FIRE HOSE CABINET
	PRESSURE REDUCING VALVE
	FLEXIBLE EXPANSION LOOP
	FLOWMETER
BFP	BACKFLOW PREVENTER
T	STEAM TRAP

ABBREVIATIONS

ALL ABBREVIATIONS SHOWN MAY NOT APPEAR ON ALL DRAWINGS.

ABBV.	DESCRIPTION
AFF	ABOVE FINISHED FLOOR
AHU	AIR HANDLING UNIT
A	AMPERE
BOD	BOTTOM OF DUCT
BOP	BOTTOM OF PIPE
BTU	BRITISH THERMAL UNIT
CB	CIRCUIT BREAKER
CFM	CUBIC FEET PER MINUTE
CO2	CARBON DIOXIDE
CI	CAST IRON
℄	CENTER LINE
CO	CLEAN OUT
C	CONDUIT
CRP	CONDENSATE RETURN PUMP
CRU	COMPUTER ROOM UNIT
CU	CONDENSING UNIT
DB	DRY BULB
DS	DISCONNECT SWITCH
EDH	ELECTRIC DUCT HEATER
ENT	ENTERING
EUH	ELECTRIC UNIT HEATER
EWC	ELECTRIC WATER COOLER
EWS	EMERGENCY EYEWASH/SHOWER
EF	EXHAUST FAN
FA	FIRE ALARM
FCO	FLOOR CLEANOUT
FCU	FAN COIL UNIT
FDC	FIRE DEPARTMENT CONNECTION
FHC	FIRE HOSE CABINET
FHR	FIRE HOSE REEL
FPB	FAN POWERED BOX
FPI	FINS PER INCH
PRV	PRESSURE REDUCING VALVE
GALV	GALVANIZED
GAL	GALLONS
GC	GENERAL CONTRACTOR
GCO	GRADE CLEAN OUT
GFI	GROUND FAULT INTERRUPTER
GPH	GALLONS PER HOUR
GPM	GALLONS PER MINUTE
HP	HORSEPOWER
HWR	HOT WATER RETURN
HZ	HERTZ
IE	INVERT ELEVATION
KVA	THOUSAND VOLT AMPERES
LAV	LAVATORY
lbs/HR	POUNDS PER HOUR
LO	LOCKED OPEN
LVG	LEAVING
NFWH	NON FREEZE WALL HYDRANT
OA	OUTSIDE AIR

ABBREVIATIONS

ALL ABBREVIATIONS SHOWN MAY NOT APPEAR ON ALL DRAWINGS.

ABBV.	DESCRIPTION
OBD	OPPOSED BLADE DAMPER
PSI	POUNDS PER SQUARE INCH
RA	RETURN AIR
RCP	REFLECTED CEILING PLAN
RD	ROOF DRAIN
RF	RETURN/RELIEF FAN
RPM	REVOLUTIONS PER MINUTE
SA	SUPPLY AIR
SAN	SANITARY
SS	STAINLESS STEEL
TO	TRANSFER OPENING
TYP	TYPICAL
V	VOLTS
VD	VOLUME DAMPER
VAV	VARIABLE AIR VOLUME
VTR	VENT THRU ROOF
UH	UNIT HEATER
UNO	UNLESS NOTED OTHERWISE
WB	WET BULB
WG	WATER GAUGE
WH	WATER HEATER
WHP	WATER-SOURCE HEAT PUMP

THE SEAL APPEARING ON THIS DOCUMENT WAS AUTHORIZED BY STEPHEN P. LEARY, P.E. 60987. ALTERATION OF A SEALED DOCUMENT WITHOUT PROPER NOTIFICATION TO THE RESPONSIBLE ENGINEER IS AN OFFENSE UNDER THE TEXAS ENGINEERING PRACTICE ACT.

STATE OF TEXAS
STEPHEN P. LEARY
60987
REGISTERED PROFESSIONAL ENGINEER
12.18.97

NO.	REVISION	BY	DATE

NORTH TEXAS TOLLWAY AUTHORITY

ADDISON AIRPORT TUNNEL BARRIER TOLL PLAZA

MECHANICAL SYMBOLS & ABBREVIATIONS

AGUIRRE Corporation
12700 PARK CENTRAL DRIVE
10 TH FLOOR
DALLAS TEXAS 75251
TEL. (972) 788-1508

SECTION XIII

CHECKED SPL DATE 12/18/97
CHECKED DATE 12/18/97
DESIGNED JCN DATE 12/20/96
SCALE AS SHOWN

CONTRACT NO. DNT-290 SHEET 40 OF 53

AT-M1.1

H:\aai-proj\9603-01\DWG\ADDISON\TAAT_M1.dwg
Fri Dec 12 10:06:49 1997

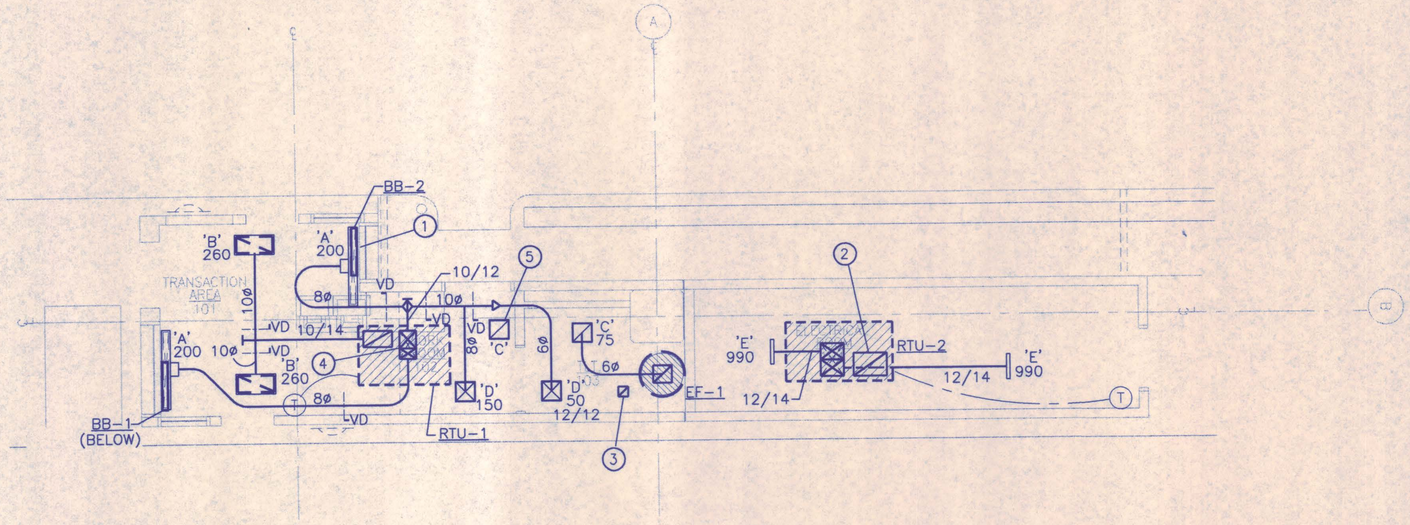

1 BOOTH MECHANICAL PLAN
SCALE: 1/4" = 1'-0"
TAATMPB1.DWG

NORTH

GENERAL NOTES

1. REFER TO ARCHITECTURAL REFLECTED CEILING PLAN AND ELECTRICAL LIGHTING PLAN FOR EXACT PLACEMENT OF DIFFUSERS.

NOTES BY SYMBOL '○'

1. BASEBOARD HEATER BENEATH COUNTER. REF. ARCHITECTURAL. TYPICAL FOR TWO.
2. RETURN OPEN TO SPACE.
3. 6"X6" DUCT THRU ROOF WITH CURB. TERMINATE WITH GOOSENECK AND BIRD SCREEN.
4. SPLIT SUPPLY, WITH 10/12 TO NORTH AND 10/10 TO 8ø TO SOUTH.
5. TRANSFER GRILLE, OPEN TO SPACE ABOVE CEILING.

THE SEAL APPEARING ON THIS DOCUMENT WAS AUTHORIZED BY STEPHEN P. LEARY, P.E. 60987. ALTERATION OF A SEALED DOCUMENT, WITHOUT PROPER NOTIFICATION TO THE RESPONSIBLE ENGINEER IS AN OFFENSE UNDER THE TEXAS ENGINEERING PRACTICE ACT.

STATE OF TEXAS
STEPHEN P. LEARY
60987
REGISTERED
PROFESSIONAL ENGINEER
12-18-97

NO.	REVISION	BY	DATE

NORTH TEXAS TOLLWAY AUTHORITY

ADDISON AIRPORT TUNNEL BARRIER TOLL PLAZA

MECHANICAL HVAC PLAN

AGUIRRE corporation
12700 PARK CENTRAL DRIVE
15 TH FLOOR
DALLAS TEXAS 75251
TEL 1972 788-9006

SECTION XIII

CHECKED SPL DATE 12/18/97
CHECKED DATE 12/18/97
DESIGNED JCN DATE 12/20/96
SCALE AS NOTED
CONTRACT NO. DNT-290 SHEET 41 OF 53

AT-M2.1

H:\aai-proj\9603-01\DWG\ADDISON\TAAT_M2.dwg
Fri Dec 12 10:09:02 1997

ROOFTOP UNIT SCHEDULE

DESIGNATION	AREA SERVED	ELECTRICAL COMPRESSOR DATA		EVAPORATOR FAN				COOLING DATA					CONDENSER FAN			HEATER DATA		SIZE	REMARKS
		VOLTS/ PHASE	RLA/LRA	CFM	OA MIN	ESP	HP	TMBH	SMBH	EDB °F	EWB °F	AMBIENT TEMP	NO.	HP	FLA	INPUT MBH	OUTPUT MBH		
RTU-1	BOOTH	208/1	10/67	600	75	.75	1/4	17.3	10.9	80	67	105	1	1/5	1.6	40	30	NOMINAL 2 TONS	NOTES 1, 2
RTU-2	ELEC ROOM	208/3	17.5/118	1980	100	.25	3/4	56.4	37.1	80	67	105	1	1/2	3.3	–	–	NOMINAL 5 TONS	NOTES 1, 3

NOTES:
1. PROVIDE FACTORY ROOF CURB.
2. PROVIDE WITH HEAT/COOL PROGRAMMABLE THERMOSTAT. WITH AUTO CHANGE-OVER, WEEKLY TIME SCHEDULE AND NIGHT SETBACK.
3. PROVIDE WITH COOLING ONLY THERMOSTAT WITH FEATURES AS ABOVE.

EXHAUST FAN SCHEDULE

DESIGNATION	LOCATION	SERVICE	TYPE	DRIVE	CFM	EXT. S.P. IN.	FAN RPM	MOTOR DATA			WEIGHT	REMARKS
								HP	VOLT/ PHASE	RPM		
EF-1	ROOF	RESTROOM	CENTRIFUGAL	DIRECT	75	0.25	1300	1/60	120/1	1300	20 LBS.	1,2

NOTES:
1. PROVIDE SPEED CONTROLLER FOR SYSTEM BALANCE.
2. FURNISH WITH BACKDRAFT DAMPER.

AIR DEVICE SCHEDULE

DESIGNATION	DESCRIPTION	FACE TYPE	MAX S.P. IN	MAX NC.	REMARKS
'A'	SLOT	SLOT	0.1	35	48"LONG WITH 18" DOWN SLOT, LAY-IN CEILING
'B'	24"X12" RETURN	PERFORATED	0.05	35	MOUNTING FRAME FOR LAY-IN CEILING
'C'	8"X8" EXHAUST GRILLE	EGGCRATE	0.05	35	MOUNTING FRAME TO MATCH CEILING
'D'	CEILING DIFFUSER	LOUVERED	0.1	35	24"X24" IN BOOTH, 12"X12" IN RESTROOM, FRAME TO MATCH CLG.
'E'	20"X14" SUPPLY GRILLE	LOUVERED	0.1	35	DUCT MOUNT W/ OBD

NOTES:

BASEBOARD HEATERS SCHEDULE

DESIGNATION	LOCATION	MBH	WATTS	VOLTS/ PHASE	DIM.	REMARKS
BB-1 & 2	BOOTH UNDER CASH BOX	3.41	1000	120/1	12X10X5	1.

NOTES:
1. PROVIDE LINE VOLTAGE RHEOSTAT WITH PUSH ON-OFF DIAL MOUNTED IN TOLL BOOTH CONTROL PANEL (ONE PER ATTENDANT STATION). REFER TO ELECTRICAL DETAILS.

CONTROL SEQUENCE

RTU-1

1. FAN RUNS INTERMITTENTLY ON A CALL FOR HEATING OR COOLING. COMPRESSOR CYCLES TO MAINTAIN SPACE COOLING TEMPERATURE SETPOINT. FURNACE GAS VALVE CYCLES, WITH REQUIRED SAFETIES, TO MAINTAIN SPACE HEATING TEMPERATURE SETPOINT, WITHOUT OVERLAP WITH COOLING SETPOINT.

RTU-2

1. FAN RUNS INTERMITTENTLY ON A CALL FOR COOLING. COMPRESSOR CYCLES TO MAINTAIN SPACE TEMPERATURE SETPOINT.

BASEBOARD HEATER

1. HEATER ON-OFF AND PERCENT OUTPUT SHALL BE CONTROLLED FROM LOCAL SWITCH/RHEOSTAT. BASEBOARD HEATING SHALL BE AVAILABLE AT ALL TIMES. REFER TO SCHEDULE NOTES.

EXHAUST FANS

1. EXHAUST FAN SHALL RUN INTERMITTENTLY FROM TOILET ROOM LIGHT SWITCH.

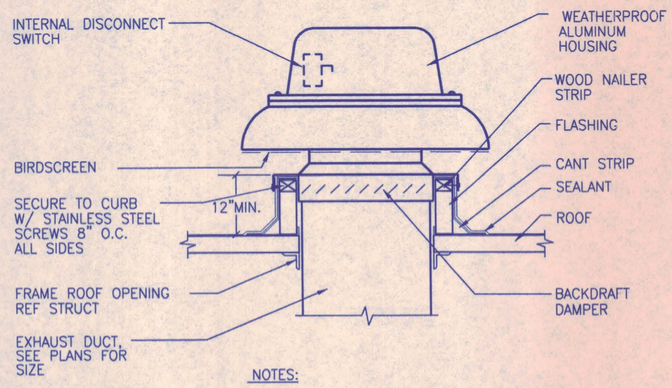

NOTES:

1. EXHAUST DUCT-SIZES AS SHOWN ON PLANS. DUCTS SHALL EXTEND UP TO ROOF EXHAUSTER OPENING. DUCTS SHALL NOT TERMINATE BELOW ROOF.
2. PROVIDE SPACE FOR ELECTRICAL CONDUIT BETWEEN DAMPER AND CURB.

1 EXHAUST FAN DETAIL
SCALE:NTS

AT-M6.1

THE SEAL APPEARING ON THIS DOCUMENT WAS AUTHORIZED BY STEPHEN P. LEARY, P.E. 60987. ALTERATION OF A SEALED DOCUMENT WITHOUT PROPER NOTIFICATION TO THE RESPONSIBLE ENGINEER IS AN OFFENSE UNDER THE TEXAS ENGINEERING PRACTICE ACT.

STATE OF TEXAS
STEPHEN P. LEARY
60987
REGISTERED PROFESSIONAL ENGINEER
12-18-97

NO.	REVISION	BY	DATE

NORTH TEXAS TOLLWAY AUTHORITY

ADDISON AIRPORT TUNNEL BARRIER TOLL PLAZA

MECHANICAL HVAC SCHEDULES AND DETAILS

AGUIRRE corporation
12700 PARK CENTRAL DRIVE
16 TH FLOOR
DALLAS TEXAS 75251
TEL. (972) 788-1808

SECTION XIII

CHECKED SPL DATE 12/18/97 DESIGNED JCN DATE 12/20/96
CHECKED SPL DATE 12/18/97 SCALE AS NOTED
CONTRACT NO. DNT-290 SHEET 42 OF 53

H:\aai-proj\9603-01\DWG\ADDISON\TAAT_M6.dwg
Fri Dec 12 10:13:35 1997

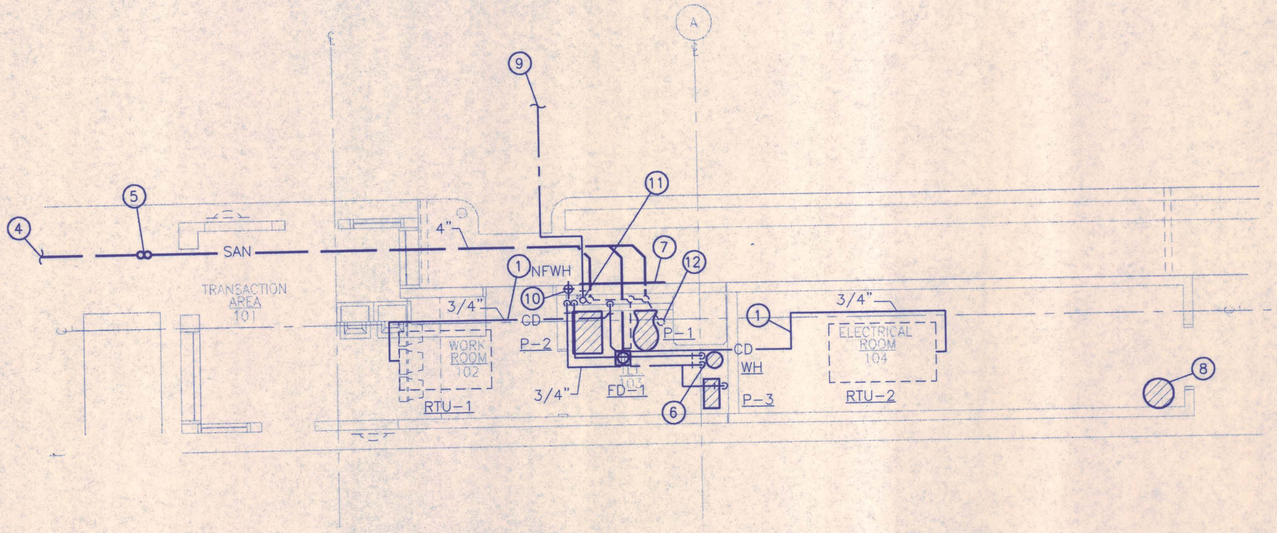

2 PLUMBING BOOTH PLAN

SCALE: 1/4" = 1'-0"

TAATPPB1

NORTH

PLUMBING FIXTURE CONNECTION SCHEDULE

TAG	DESCRIPTION	CONNECTION				REMARKS
		CW	HW	SAN	VENT	
P-1	WATER CLOSET	1"	–	4"	2"	HANDICAP ACCESSIBLE
P-2	LAVATORY	1/2"	1/2"	2"	1 1/2"	HANDICAP ACCESSIBLE
FD-1	FLOOR DRAIN	–	–	3"	2"	PROVIDE WITH TRAP PRIMER
WH	WATER HEATER	1/2"	1/2"	–	–	WITH T&P DRAIN TO EXTERIOR
P-3	WATER CHILLER	1/2"	–	–	–	

WH A.O. SMITH STOCK NO. ELSF-10, OR STATE, OR RHEEM, OR APPROVED EQUAL.
1500 WATTS/120V, 150 PSI MAXIMUM.

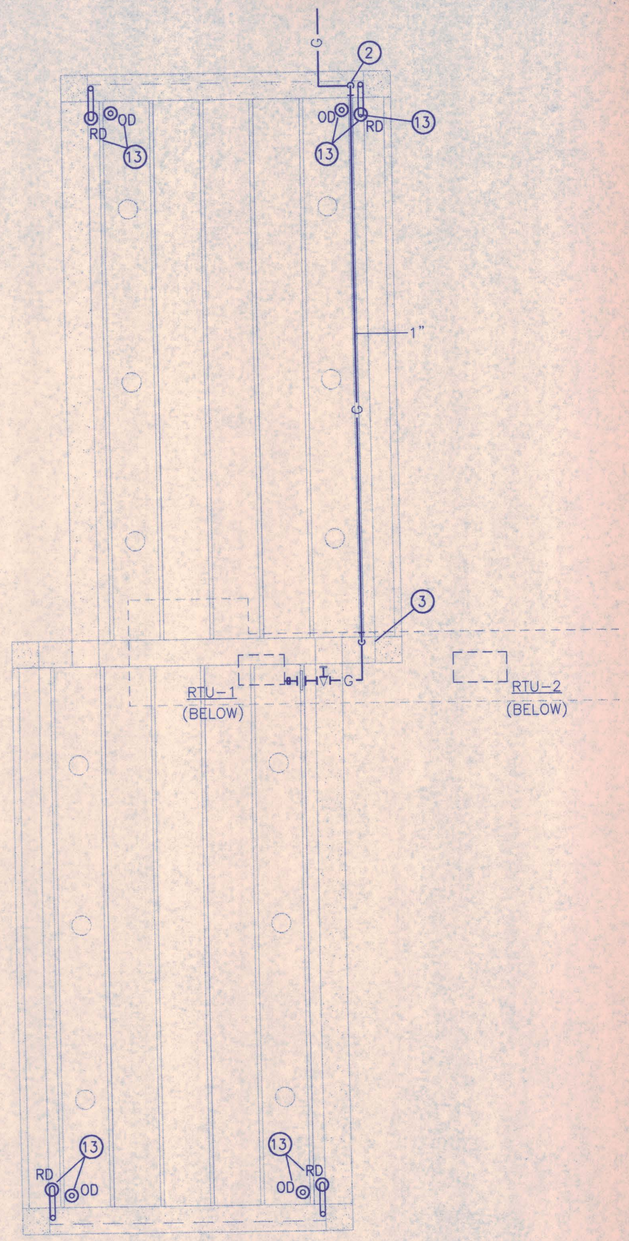

1 CANOPY PLUMBING PLAN

SCALE: 1/8" = 1'-0"

TAATMPC1

NORTH

GENERAL NOTES

1. ALL GAS PIPE IS TO BE EXPOSED UNDER CANOPY TO RTU'S. DO NOT ENCLOSE OR COVER IN RACEWAYS WITHOUT PROPER SLEEVE.

2. PROVIDE ELECTRIC HEAT TRACE ON ALL HOT & COLD WATER PIPING EQUAL TO RAYCHEM 5XL-1, 40°F TEMPERATURE.

NOTES BY SYMBOL 'O'

1. CONDENSATE LINE ON ROOF. TRAP ABOVE ROOF AND EXTEND 3/4" DOWN TO HUB DRAIN IN PLUMBING CHASE.
2. ROUTE GAS LINE UP AT COLUMN TO UNDERSIDE OF PRECAST DOUBLE TEE ROOF STRUCTURE. PROVIDE 1 FOOT DEEP DIRT LEG WITH THREADED CAP AT BOTTOM.
3. ROUTE 1" GAS LINE DOWN COLUMN TO ROOF OF BOOTH CONNECTION TO RTU-1.
4. 4" SANITARY SEWER. I.E.= 98.0' AT BUILDING EXIT. REFER TO CIVIL FOR CONTINUATION.
5. 2-WAY CLEANOUT.
6. WATER HEATER ON SHELF ABOVE CEILING. FURNISH GALVANIZED PAN, 3" DEEP, 3" LARGER THAN HEATER O.D. WITH SWEATED 1/2" DRAIN LINE. ROUTE DRAIN LINE TO HUB DRAIN IN CHASE. FURNISH SHUT-OFF VALVE ON CW SUPPLY AND UNIONS AT HW/CW CONNECTIONS. ROUTE FULL SIZED DISCHARGE FROM T&P RELIEF DOWN IN CHASE AND OUT THROUGH EXTERIOR WALL NEAR NFWH AT 6" A.F.F. TERMINATE W/ 90° ELL DOWN.
7. ACCESS PANELS. REF. ARCH.
8. FIRE SUPPRESSION CANISTER FOR FM-200 SYSTEM. REF. DIV. 15 SPECIFICATIONS.
9. 1 1/2" POTABLE WATER SUPPLY. REFER TO CIVIL FOR CONTINUATION.
10. 3/4" CW DOWN TO RECESSED NFWH.
11. ROUTE 1 1/2" POTABLE WATER SUPPLY UP INTO CHASE IN SLEEVE. PROVIDE SHUT-OFF VALVE IN VERTICAL, ACCESSIBLE FROM ACCESS PANEL. PROVIDE DOUBLE-CHECK BACKFLOW PREVENTER IN HORIZONTAL.
12. 2" VENT THROUGH ROOF.
13. 4" ROOF DRAIN WITH CAST IRON LEADER, AND OVERFLOW ROOF DRAIN. REFER TO ARCHITECTURAL FOR ROUTING ALONG COLUMN.

STATE OF TEXAS
STEPHEN P. LEARY
60987
REGISTERED PROFESSIONAL ENGINEER
12-18-97

NO.	REVISION	BY	DATE

NORTH TEXAS TOLLWAY AUTHORITY

ADDISON AIRPORT TUNNEL BARRIER TOLL PLAZA

PLUMBING PLANS AND SCHEDULES

AGUIRRE
AGUIRRE Corporation
12700 PARK CENTRAL DRIVE
16 TH FLOOR
DALLAS TEXAS 75251
TEL (972) 788-1006

SECTION XIII

CHECKED SPL DATE 12/18/97
CHECKED DATE 12/18/97
DESIGNED JCN DATE 12/20/96
SCALE AS NOTED

CONTRACT NO. DNT-290 SHEET 43 OF 53

AT-P1.1

H:\aoi-proj\9603-01\DWG\ADDISON\TAAT_P1.dwg
Fri Dec 12 10:11:13 1997

ELECTRICAL SYMBOLS

COMMUNICATIONS

- DATA OUTLET
- PUSHBUTTON
- TELEPHONE OUTLET

FIRE ALARM

- MANUAL PULL STATION
- FIRE ALARM – AUDIBLE HORN
- FIRE ALARM – COMBINATION UNIT LIGHT & HORN
- HEAT DETECTOR
- SMOKE DETECTOR
- FACP — FIRE ALARM CONTROL PANEL
- FIRE ALARM SPEAKER
- FIRE ALARM FLASHER

LIGHTING

- 2' X 2' LIGHT FIXTURE
- 2' X 4' LIGHT FIXTURE
- STRIP LIGHT FIXTURE
- HID LIGHT FIXTURE
- WALL MOUNTED EXIT LIGHT - 1 SIDE
- PC — PHOTOCELL
- WALL MOUNT
- RECESSED IN CONCRETE
- WALL MOUNT LIGHT FIXTURE

PANELS

- 120/208 PANELBOARD

POWER

- RECEPTACLE
- EXHAUST FAN
- JUNCTION BOX
- MOTOR
- COMBINATION STARTER/DISCONNECT SWITCH
- DISCONNECT SWITCH
- MOTOR STARTER
- TRANSFORMER
- HOME RUN
- UNDERGROUND CONDUIT/CABLE
- UNDERGROUND GROUND CONDUCTOR
- GROUND ROD

SECURITY

- M — ALARM INTRUSION DEVICE
- CLOSED CIRCUIT TELEVISION CAMERA
- GLASSBREAK
- KP — KEYPAD
- SEC — SECURITY PANEL
- DOMED WEATHERPROOF
- P/T/Z — PAN/TILT/ZOOM
- TELEVISION OUTLET
- DRR — MAGNETIC DOOR REMOTE RELEASE
- MIC — MICROPHONE
- PANIC BUTTON
- CR — CARD READER

SWITCHES

- $ — STANDARD WALL SWITCH
- $3 — 3 WAY SWITCH
- $M — MOTOR SWITCH

ABBREVIATIONS

AAT	ADDISON AIRPORT TUNNEL
AFC	ABOVE FINISHED COUNTER
AFF	ABOVE FINISHED FLOOR
AVI	AUTOMATIC VEHICLE IDENTIFICATION
C	CONDUIT
CB, C/B OR	CIRCUIT BREAKER
CKT	CIRCUIT
CCTV	CLOSED CIRCUIT TELEVISION
CLG	CEILING
CACP/FP	CARD ACCESS PROCESSING CONTROL FIELD PANEL.
C.T	CURRENT TRANSFORMER
ELEC	ELECTRIC
EMERG	EMERGENCY
EWC	ELECTRIC WATER COOLER
FA	FIRE ALARM
FACP	FIRE ALARM CONTROL PANEL
FIXT	FIXTURE
FLR	FLOOR
FLUOR	FLUORESCENT
FTU	FAN TERMINAL UNIT
G,GND	GROUND
GEF	GENERAL EXHAUST FAN
GEN	GENERATOR
GFI	GROUND FAULT CIRCUIT INTERRUPTER
HP	HORSEPOWER
ILP	IN LANE PROCESSOR
INCAND	INCANDESCENT
IG	ISOLATED GROUND
JBOX	JUNCTION BOX
LTS	LIGHTS
LTG	LIGHTING
LV	LOW VOLTAGE
MCB	MAIN CIRCUIT BREAKER
MLO	MAIN LUGS ONLY
MTD	MOUNTED
MTG HGT	MOUNTING HEIGHT
NEC	NATIONAL ELECTRICAL CODE
NFD	NON-FUSED DISCONNECT
PNL	PANEL
PWR	POWER
RECEPT, RCPT	RECEPTACLE
RF	RETURN AIR FAN
R/T/G	RED/TOLL/GREEN
TEL - THHN/THWN	TELEPHONE
NTTA	NORTH TEXAS TURNPIKE AUTHORITY
TYP	TYPICAL
UL	UNDERWRITER'S LABORATORIES
UPS	UNINTERRUPTIBLE POWER SUPPLY
UNO	UNLESS NOTED OR INDICATED OTHRWISE
V	VOLTAGE
W	WIRE
W/	WITH
WP	WEATHER PROOF
W/S	WATER SWITCH
WT	WATER TIGHT
XFMR	TRANSFORMER

GENERAL NOTES

A. GENERAL NOTES

1. THE WORD 'PROVIDE' AS USED IN THE DRAWINGS SHALL MEAN FOR THE CONTRACTOR TO 'FURNISH AND INSTALL', UNLESS NOTED OTHERWISE.
2. FASTENING HARDWARE (BOLTS, SCREWS, NUTS, WASHERS) SHALL BE GALVANIZED UNLESS NOTED OTHERWISE. SUPPORTS FOR CONDUIT AND EQUIPMENT SHALL BE HOT DIP GALVANIZED STEEL.
3. CONTRACTOR SHALL INSTALL PANELS, FIXTURES, BOXES, CONDUIT, ETC. IN LOCATIONS SHOWN. MINOR DEVIATIONS FROM THE DRAWINGS, AS REQUIRED BY FIELD CONDITIONS SHALL BE PERMITTED.
4. 120 VOLT BRANCH CIRCUITS 100' TO 200' SHALL BE A MINIMUM #10 AWG. CIRCUITS OVER 200' SHALL BE A MINIMUM #8 AWG. 208 VOLT CIRCUITS OVER 200' SHALL BE A MINIMUM #10 AWG. THE DISTANCE SHALL BE MEASURED FROM THE PANEL TO THE MOST DISTANT POINT IN THE CIRCUIT. CONDUIT SHALL BE ROUTED PARALLEL AND PERPENDICULAR TO STRUCTURAL SYSTEM.
5. NOT USED
6. MINIMUM BRANCH CIRCUIT SIZE SHALL BE 2#12 AND #12 AWG GROUND.
7. BRANCH CIRCUITS SHALL MEET THE REQUIREMENTS OF THE NEC AND OTHER STATE AND LOCAL ORDINANCES. WHERE THERE IS A CONFLICT, THE MOST STRINGENT SHALL APPLY.
8. COORDINATE WITH MECHANICAL SHEETS FOR LOCATION OF MOTORS.
9. COORDINATE THE POWER REQUIREMENTS FOR ALL MECHANICAL EQUIPMENT WITH THE EQUIPMENT BEING INSTALLED BEFORE INSTALLING CONDUIT AND WIRE.
10. EQUIPMENT IS NEW UNLESS NOTED OTHERWISE.

B. CONDUIT

1. POWER AND LIGHTING CONDUITS ARE SIZED BASED ON THHN/THWN INSULATION.
2. OPEN KNOCKOUTS IN JUNCTION BOXES AND EQUIPMENT SHALL BE PLUGGED.

C. LIGHTING

1. EXIT AND SELF CONTAINED EMERGENCY FIXTURES SHALL BE CIRCUITED AHEAD OF THE WALL SWITCH , OR ON A SEPARATE CIRCUIT.
2. LIGHT SWITCHES ARE TO BE AT 48" AFF UNLESS NOTED OTHERWISE
3. FLUORESCENT LAMPS SHALL BE 5000 DEGREES KELVIN UNLESS STATED OTHERWISE
4. VERIFY SWITCH LOCATIONS WITH ARCHITECTURAL SHEETS

D. POWER

1. VERIFY EXACT POWER CONNECTION TYPE AND NEMA CONFIGURATION OF OUTLETS REQUIRED TO SERVE OWNER FURNISHED EQUIPMENT.
2. 120 VOLT RECEPTACLES WITHIN 6 FEET DISTANCE FROM PLUMBING FIXTURES OR SINKS SHALL BE EQUIPPED WITH GFI PROTECTION.
3. OUTLETS SHALL NOT BE MOUNTED BACK TO BACK. A MINIMUM OF ONE STUD SHALL BE BETWEEN OUTLETS.
4. RECPTACLES ARE TO BE AT 16" AFF TO MEET ADA CODE, UNLESS OTHERWISE NOTED.
5. TWO SECTION PANELBOARDS SHALL BE SAME AMPACITY. PROVIDE A SUBFEED LOGS.
6. DO NOT CONNECT MORE THAN SEVEN CONVENIENCE OUTLETS PER 20 AMPERE CIRCUIT.

E. COMMUNICATIONS

1. COMMUNICATIONS WIRING SHALL BE INSTALLED PER NEC. USE LOW SMOKE PRODUCING CABLE OR INSTALL IN MINIMUM OF 1/2" CONDUIT.

F. FIRE ALARM

1. FIRE ALARM CONDUIT SHALL BE 3/4 " MINIMUM.
2. FIRE ALARM CABLES SHALL BE AS REQUIRED BY THE FIRE ALARM SYSTEM MANUFACTURER.

G. GROUNDING

1. PER NEC ARTICLE 250.

LIGHT FIXTURE SCHEDULE

TYPE	DESCRIPTION	VOLTS	SIMILAR TO MANUFACTURER'S PART NUMBER	LAMP(S)
A	2'X2', 2 LAMP, RECESSED FLUORESCENT, ACRYLIC A12 LENS	120	LITHONIA 2SPG-2U32-A12-120-GEB OR COLUMBIA OR APPROVED EQUAL	(2) OSRAM/ SYLVANIA FB032/841/6
A3	2'X4', 3 LAMP, RECESSED FLUORESCENT, ACRYLIC A12 LENS	120	LITHONIA 2SPG-332-A12-120-GEB OR COLUMBIA OR APPROVED EQUAL	(3) OSRAM/ SYLVANIA F032/950
J2	4' INDUSTRIAL FLUORESCENT, MOUNTED TO BOTTOM OF ROOF DECK.	120	LITHONIA L32-120-GEB OR COLUMBIA OR APPROVED EQUAL	(2) OSRAM/ SYLVANIA F032/950
H1	HIGH PRESSURE SODIUM HID FIXTURE, MOUNTED ON STRUCTURE.	MULTI-TAP	SPAULDING NKII-CM-S250-VS-MT-DBZ OR MOLDCAST OR APPROVED EQUAL	250 WATT HPS
X1	RED, LIGHT EMITTING DIODE TYPE, STENCIL FACE, WHITE, SINGLE FACE, DUAL VOLTAGE, UNIVERSAL MOUNT, EXIT LIGHT EGRESS LIGHT.	120	LITHONIA LE-S-W-1-R-120 OR PRESCOLITE OR APPROVED EQUAL	NONE
K	WALL MOUNTED HALOGEN FIXTURE. REFER TO ARCH. FOR MOUNTING HEIGHT.	120	BEGA 6615 BLACK OR APPROVED EQUAL	150 WATT HALOGEN
B	WALL MOUNT ABOVE WINDOW	120	KENALL 6120 OR LITHONIA EQUAL	GOLBUG LITES F20J12/GO/ES
M	RECESSED IN CONCRETE	120	HYDREL #4418-4 LESS YOKE WITH #1422-2A AMBER LENS OR HUBBELL OR APPROVED EQUAL	(1) OSRAM SYLVANIA 69A21/TS

12/18/97
STATE OF TEXAS
RICHARD LAWRENCE DICKERSON
69306
REGISTERED PROFESSIONAL ENGINEER

NO.	REVISION	BY	DATE

NORTH TEXAS TOLLWAY AUTHORITY

ADDISON AIRPORT TUNNEL
BARRIER TOLL PLAZA

ELECTRICAL
GENERAL NOTES, SYMBOLS, AND ABBREVIATIONS

AGUIRRE Corporation
12700 PARK CENTRAL DRIVE
16 TH FLOOR
DALLAS TEXAS 75251
TEL (972) 755-1200

SECTION XIII

CHECKED RLD DATE 12/18/97
CHECKED JES DATE 12/18/97
DESIGNED FA DATE 12/20/96
SCALE N.T.S.

CONTRACT NO. DNT-290 SHEET 44 OF 53

AT-E0.1

H:\aai-proj\9603-01\DWG\ADDISON\TAAT_E1.dwg
Fri Dec 12 09:51:51 1997

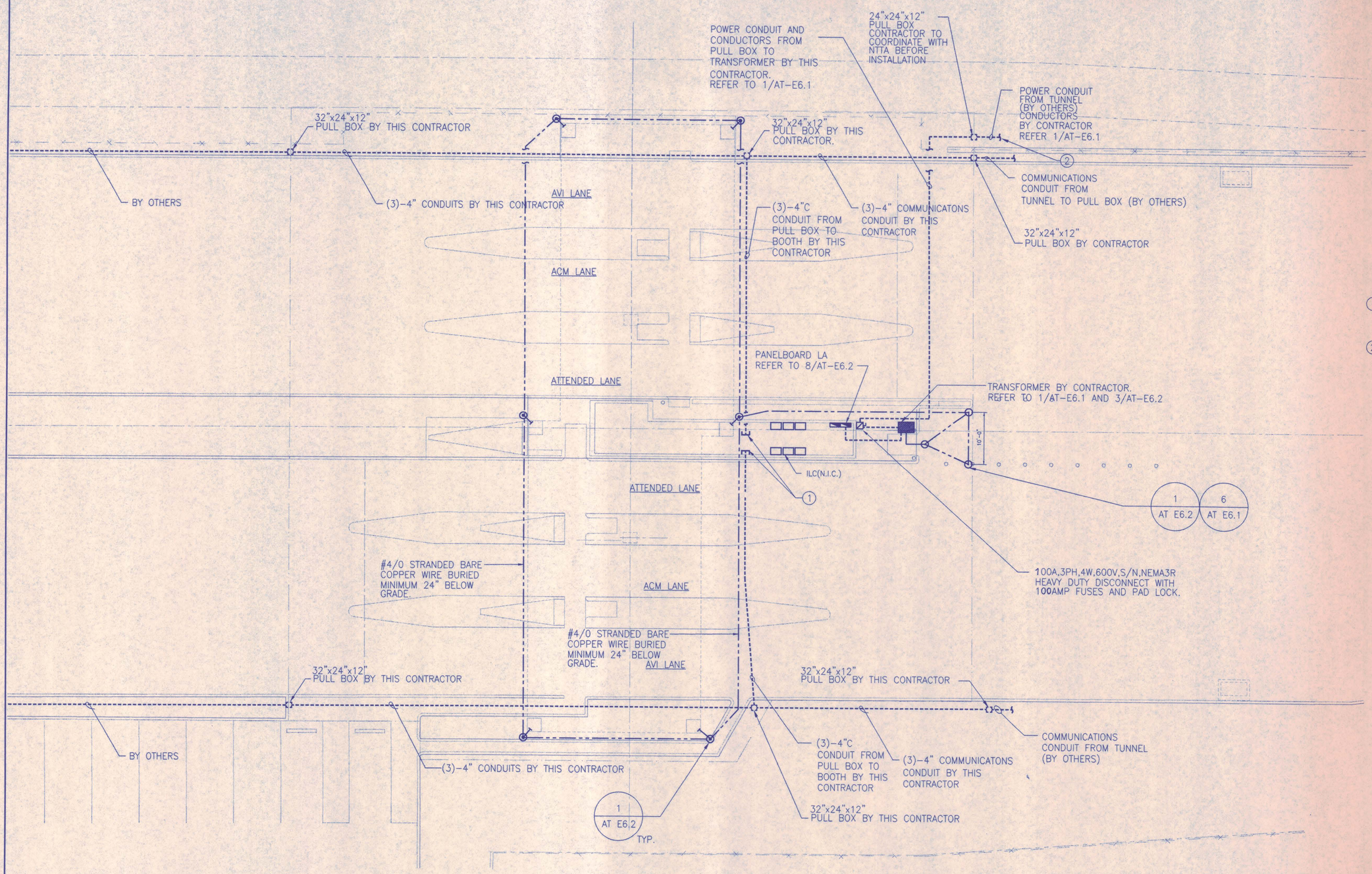

1 ELEC. SITE UTILITY & GROUNDING PLAN

SCALE: 1" = 10'-0"

TAATESP2.DWG

GENERAL NOTES

1. LIGHTNING PROTECTION SHALL BE PROVIDED PER SPEC SECTION 16670.
2. PULLBOXES SHALL BE CAST METAL, FLUSH TOP, WATERTIGHT, UL TYPE 4, SIZE AS INDICATED.

KEY NOTES

1. STUB CONDUITS FLUSHED WITH COMMUNICATION BOARD. PROVIDE PULLSTRING AND TERMINATE CONDUITS WITH PLASTIC BUSHING.
2. REFER TO "HDR" ADDISON AIRPORT TUNNEL CONTRACT DOCUMENTS FOR NTTA CONTRACT No. DNT-260 FOR TERMINATION POINT OF ELECTRICAL 480/277V SERVICE IN THE TUNNEL.

12/18/97
STATE OF TEXAS
RICHARD LAWRENCE DICKERSON
69306
REGISTERED PROFESSIONAL ENGINEER

NO.	REVISION	BY	DATE

NORTH TEXAS TOLLWAY AUTHORITY

ADDISON AIRPORT TUNNEL BARRIER TOLL PLAZA

ELECTRICAL SITE/UTILITY AND GROUNDING PLAN

AGUIRRE corporation
15700 PARK CENTRAL DRIVE
16 TH FLOOR
DALLAS TEXAS 75081
TEL (972) 788-1508

SECTION XIII

CHECKED RJD DATE 12/18/97
CHECKED RJD DATE 12/18/97
DESIGNED FA DATE 12/20/96
SCALE 1/8" = 1'-0"

CONTRACT NO. DNT-290 SHEET 45 OF 53

AT-E1.1

H:\oai-proj\9603-01\DWG\ADDISON\toot_E2.dwg
Fri Dec 12 10:14:23 1997

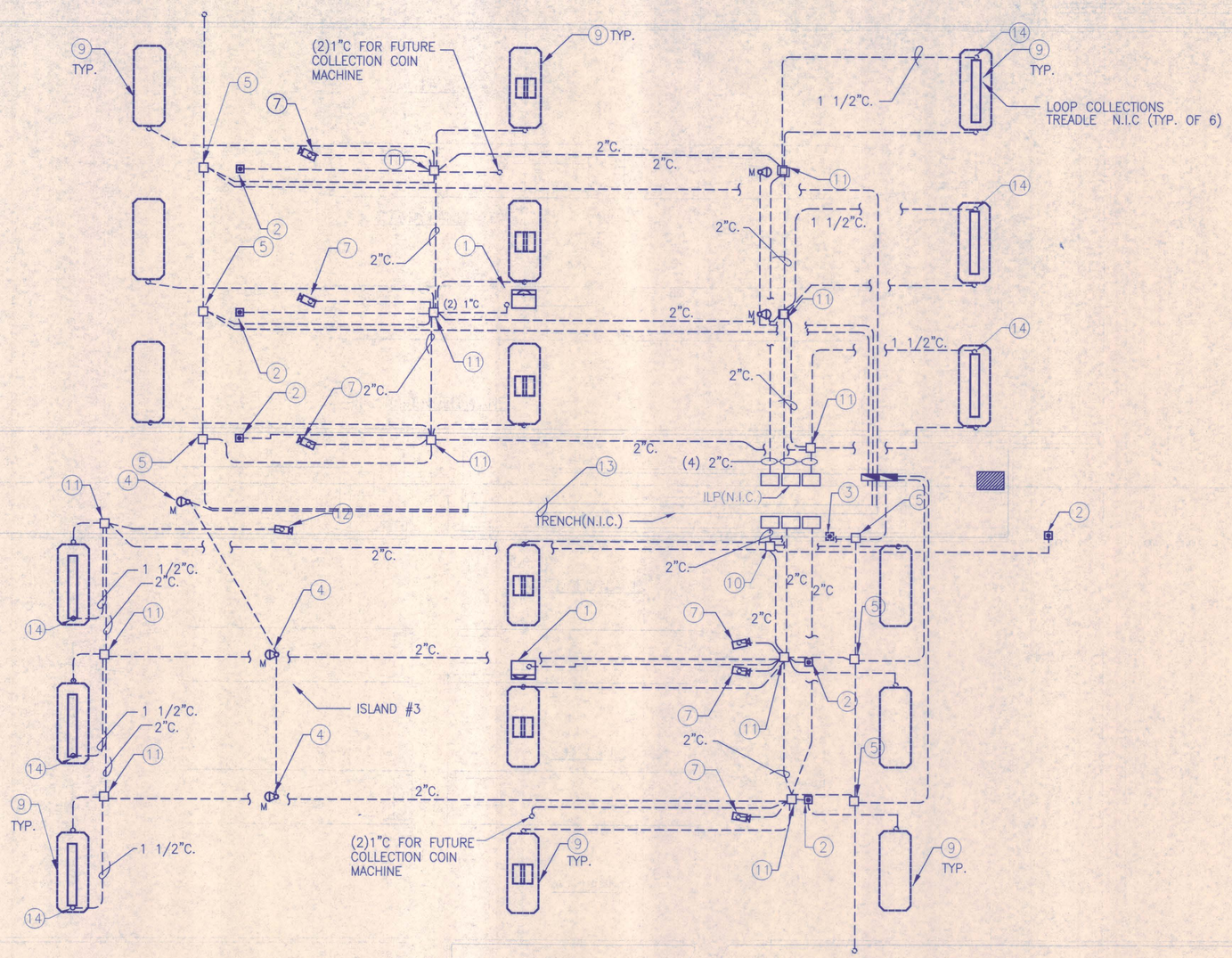

1 ELECTRICAL CONDUIT LAYOUT
SCALE: 1/8"=1'

TAATESF1.DWG

PLAN NORTH

GENERAL NOTES

1. ALL EQUIPMENT LOCATIONS ARE APPROXIMATE. EXACT LOCATIONS TO BE VERIFIED WITH CIVIL DRAWINGS AND NTTA.
2. ALL LANE EQUIPMENT CONDUITS ARE 1" UNLESS STATED OTHERWISE.
3. REFER TO 2/AT-E6.2 FOR PLUGGING AND EMPTY CONDUITS. UNLESS STATED OTHERWISE.

KEY NOTES

1. TOLL COLLECTION COIN MACHINE. N.I.C. REFER TO 2/AT-E6.2.
2. TOLL COLLECTION LIGHT N.I.C. REFER TO 2/AT-E6.2. STUB CONDUIT AT LOCATION DIRECTED BY NTTA
3. ALTERNATE LOCATION OF THE TOLL COLLECTION LIGHT (N.I.C).REFER TO 2/AT-E3.1.
4. LANE OBSTRUCTION LIGHT BY CONTRACTOR. REFER TO 4/AT-E6.2.
5. 12"x12"x8" PULLBOX CASTMETAL, FLUSH TOP, WATERTIGHT, UL TYPE 4 FOR FUTURE LIGHT CURTAIN N.I.C.
6. NOT USED
7. VIOLATION CAMERA N.I.C. STUB CONDUIT AT LOCATION DIRECTED BY NTTA. REFER TO 2/AT-E6.2.
8. NOT USED
9. LOOP DETECTOR N.I.C.VERIFY WITH CIVIL DRAWINGS FOR EXACT LOCATION. CONTRACTOR TO VERIFY WITH INSTALLER FOR ANY ADDITIONAL ELECTRICAL INFORMATION.
10. UNDERGROUND PULL BOX. PULLBOX SHALL BE LOCATED ON ISLAND #3. REFER TO 5/AT-E6.2.
11. UNDERGROUND PULL BOX. REFER TO 5/AT-E6.2 FOR INSTALLATION.
12. SURVEILLANCE CAMERA MOUNTED ON PEDESTAL. REFER TO 2/AT-E3.1 AND 2/AT-E4.1 FOR POWER REQUIREMENTS.
13. RUN CONDUITS TO TRENCH. REFER TO AT-E3.1 AND ARCH. DRAWINGS FOR LOCATION. STUB CONDUITS INTO BOTTOM OF TRENCH DUCT.
14. REFER TO 9/AT-E6.2 FOR TREADLE DETAIL AND TO CIVIL DRAWINGS RX-C3.2 FOR MORE INFORMATION.

12/18/97
STATE OF TEXAS
RICHARD LAWRENCE DICKERSON
69306
REGISTERED PROFESSIONAL ENGINEER

NO.	REVISION	BY	DATE

NORTH TEXAS TOLLWAY AUTHORITY

ADDISON AIRPORT TUNNEL BARRIER TOLL PLAZA

ELECTRICAL CONDUIT LAYOUT LIGHTING PLAN

AGUIRRE AGUIRRE corporation 12700 PARK CENTRAL DRIVE 16 TH FLOOR DALLAS TEXAS 75251 TEL (972) 788-1606

SECTION XIII

CHECKED RLD DATE 12/18/97 DESIGNED FA DATE 12/20/96
CHECKED RLD DATE 12/18/97 SCALE 1/8"=1'-0"
CONTRACT NO. DNT-290 SHEET 46 OF 53

AT-E1.2

H:\aai-proj\9603-01\DWG\ADDISON\TAAT_E12.dwg
Tue Dec 16 14:41:14 1997

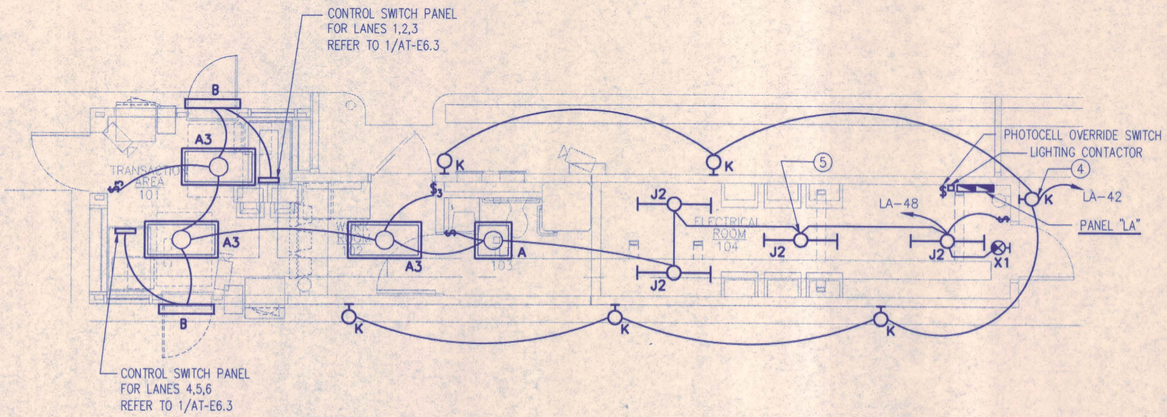

2 ELEC. BOOTH LIGHTING PLAN

SCALE: 1/4" = 1'-0"

TAATELB1.DWG

PLAN NORTH

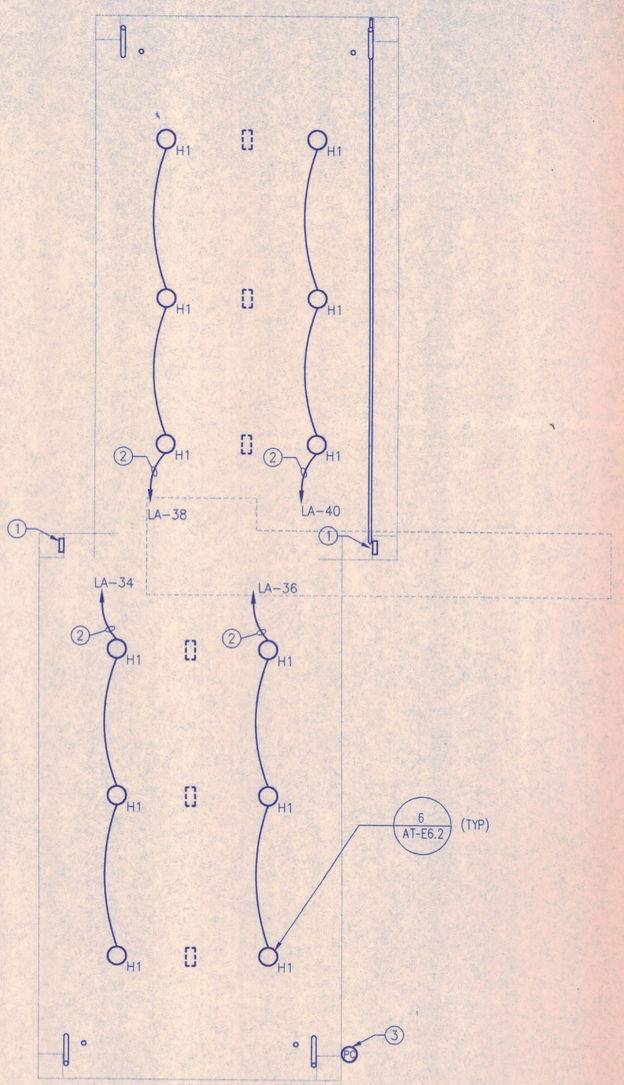

1 ELEC. CANOPY LIGHTING PLAN

SCALE: 1/8" = 1'-0"

TAATELC1.DWG

PLAN NORTH

GENERAL NOTES

1. FOR LIGHT FIXTURE TYPE REFER TO LIGHT FIXTURE SCHEDULE ON AT-E0.1.
2. ALL HOMERUNS UNDER CANOPY TO BE ROUTED TO PULLBOX AS INDICATED BY KEYNOTE-1.

KEY NOTES

1. 18"X18"X8" PULLBOX-REFER TO 3/AT-E6.1.
2. ROUTE THROUGH LIGHTING CONTACTOR IN ELECTRICAL ROOM.
3. PHOTOCELL FACE NORTH AWAY FROM LOCAL LIGHT SOURCES. PROVIDE FACE SHEILD. REFER TO 2/AT-E6.3 FOR CONNECTION DIAGRAM. INSTALL PER MANUFACTURER REQUIREMENTS AND SEAL ALL ROOF PENETRATION AS DIRECTED BY ARCHITECT.
4. WALL PACKS-REFER TO A5.1 FOR ELEVATION. RUN CIRCUIT THRU CONTACTOR-REFER TO 2/AT-E6.3
5. MOUNT FIXTURE TO BOTTOM OF DECK-REFER TO 7/AT-E6.2 TYPICAL.

12/18/97

STATE OF TEXAS
RICHARD LAWRENCE DICKERSON
69306
REGISTERED PROFESSIONAL ENGINEER

NO.	REVISION	BY	DATE

NORTH TEXAS TOLLWAY AUTHORITY

ADDISON AIRPORT TUNNEL BARRIER TOLL PLAZA

ELECTRICAL LIGHTING PLANS

AGUIRRE Aguirre Corporation
16700 PARK CENTRAL DRIVE
10 TH FLOOR
DALLAS TEXAS 75251
TEL (972) 788-9208

SECTION XIII

CHECKED RLD DATE 12/18/97
CHECKED RLD DATE 12/18/97
DESIGNED FA DATE 12/20/96
SCALE AS NOTED

CONTRACT NO. DNT-290 SHEET 47 OF 53

AT-E2.1

H:\aai-proj\9603-01\DWG\ADDISON\TAAT_E3.dwg

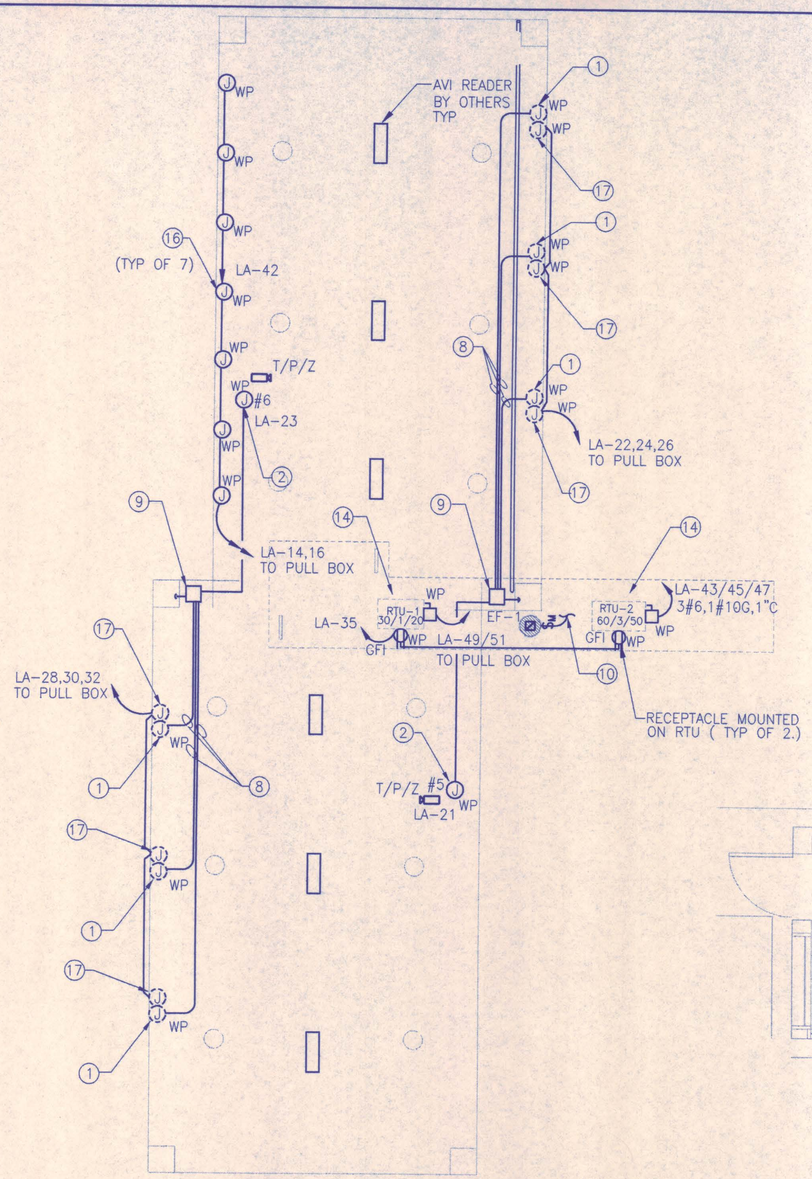

1 ELEC. CANOPY POWER PLAN

SCALE: 1/8" = 1'-0"

TAATEPC1.DWG

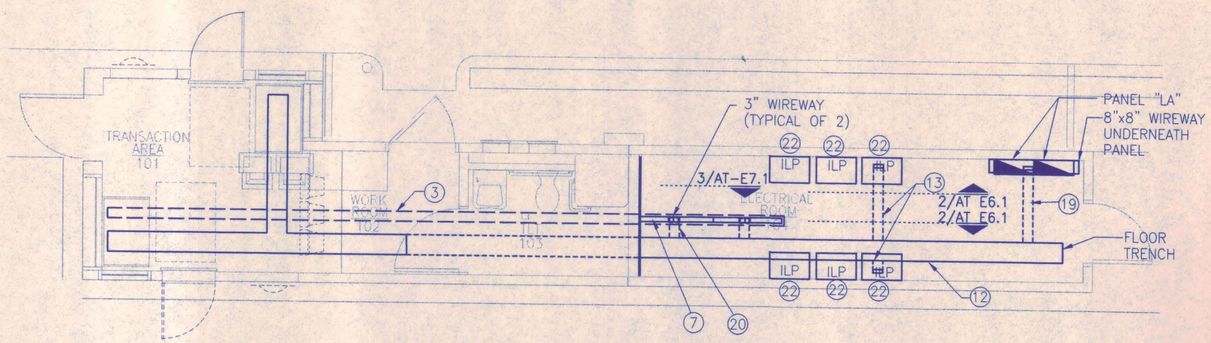

3 ELEC. BOOTH POWER PLAN

SCALE: 1/4" = 1'-0"

TAATEPB2.DWG

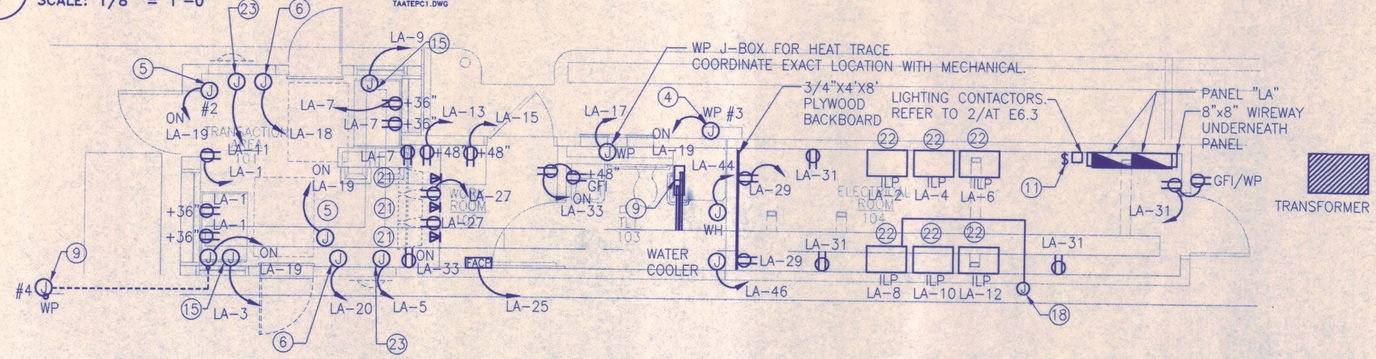

2 ELEC. BOOTH POWER PLAN

SCALE: 1/4" = 1'-0"

TAATEPB1.DWG

KEY NOTES (CONT'D)

15. UNDER COUNTER HEATER FINAL CONNECTIONS BY CONTRACTOR. VERIFY REQUIREMENTS WITH MECHANICAL.
16. ADDISON AIRPORT TUNNEL NEON SIGN PROVIDED AND INSTALLED BY OTHERS. CONTRACTOR TO PROVIDE WEATHER-PROOF J-BOX AS REQUIRED. VERIFY LOCATION OF J-BOXES WITH SIGN INSTALLER. RUN CIRCUIT THRU CONTACTOR. REFER TO 2/AT-E6.3.
17. WEATHER-PROOF J-BOX FOR LANE ICON SIGN. RUN CIRCUITS THRU CONTACTOR. REFER TO 2/AT-E6.3. VERIFY EXACT LOCATION AND ANY OTHER REQUIREMENTS.
18. PROVIDE 4"x4" WP JBOX FLUSHED ON THE OUTSIDE WALL AT 48"AFF AND RUN 1"C TO ILP FOR AN ALTERNATE FUTURE LOCATION OF THE TOLL COLLECTION LIGHT (N.I.C)
19. UNDER FLOOR DUCT FROM TRENCH TO 8" WIREWAY INSTALLED UNDERNEATH PANEL "LA.". REFER TO 2/AT-E6.1.
20. UNDERFLOOR DUCT FROM TRENCH TO RACKS (TYPICAL 2 PLACES.)
21. TV MONITORS ABOVE. REFER TO 6/AT-A5.1 & 3/AT-A6.1 FOR MOUNTING DETAIL AND LOCATION OF OUTLETS.
22. IN LANE PROCESSOR (ILP) WITH CONTROLLER ABOVE N.I.C
23. AUTOMATIC COIN MACHINE (N.I.C). VERIFY EXACT LOCATION AND INSTALL PER MANUFACTURER REQUIREMENTS.

GENERAL NOTES

1. ALL EQUIPMENT LOCATIONS ARE APPROXIMATE. EXACT LOCATION TO BE VERIFIED WITH NTTA.
2. ALL POWER CIRCUITS AND COMMUNICATION CONDUITS UNDER CANOPY TO RUN TO JUNCTION BOX AS INDICATED. REFER TO 3/AT-E6.1.
3. ALL CCTV CAMERAS SHALL BE 24VAC. CONTRACTOR TO PROVIDE POWER SUPPLIES AS REQUIRED. COORDINATE REQUIREMENTS WITH MANUFACTURER.

KEY NOTES

1. WEATHER-PROOF J-BOX FOR LANE TRAFFIC SIGNAL R/T/G AND "CLOSED" SIGN ON CANOPY. VERIFY LOCATION WITH SIGN INSTALLER. LANE TRAFFIC SIGNALS SHALL BE CONTROLLED VIA ILP FROM THE OPERATOR KEYBOARD. VERIFY REQUIREMENTS WITH ILP EQUIPMENT INSTALLER.
2. WEATHER-PROOF J-BOX FOR P/T/Z DOMED CAMERA(S). MOUNTED UNDER CANOPY OVER ISLAND FROM CONCRETE TEE @ 16'-6" AFG TO BOTTOM OF DOME. VERIFY MOUNTING REQUIREMENTS WITH MANUFACTURER.
3. 6"X4" CABLE TRAY. MOUNT ABOVE LAY-IN CEILING, 12" BELOW ROOF STRCTURE. USE CABLE TRAY TO RUN ALL LOW VOLTAGE (FIRE, SECURITY, TELEPHONE, ETC.) WIRING.
4. WEATHER-PROOF J-BOX FOR CCTV CAMERA MOUNTED 6' AFG ON EXTERIOR WALL. REFER TO 2/AT-E4.1.
5. J-BOX FOR CCTV CAMERA MOUNTED ABOVE CEILING IN BOOTH.
6. BILL CHANGER(N.I.C). VERIFY EXACT LOCATION AND INSTALL PER MANUFACTURER REQUIREMENTS.
7. 3KVA UPS INSTALLED IN 19" RACK. LIEBERT MODEL# UPSTATION GX 3000VA 208/120V, BEST, OR EQUAL.
8. 3/4"C REFER TO 3/AT-E6.3
9. PULLBOX AT FLOOR LEVEL WITH UNDERFLOOR CONDUITS REFER TO 3/AT-E6.1.
10. EXHAUST FAN SHALL BE SWITCHED WITH RESTROOM LIGHT. COORDINATE EXACT LOCATION WITH MECHANICAL.
11. MANUAL OVERRIDE SWITCH FOR PHOTOCELL.
12. FLOOR TRENCH. REFER TO ARCHITECTURAL DRAWINGS FOR EXACT LOCATION AND 2/AT-E6.1.
13. UNDER FLOOR DUCT FROM TRENCH TO WIREWAY. REFER TO 2/AT-E6.1.
14. RTU'S ARE MOUNTED ON THE BOOTH ROOF. REFER TO MECHANICAL DRAWINGS FOR EXACT LOCATION.

12/18/97
STATE OF TEXAS
RICHARD LAWRENCE DICKERSON
69306
REGISTERED PROFESSIONAL ENGINEER

NO.	REVISION	BY	DATE

NORTH TEXAS TOLLWAY AUTHORITY

ADDISON AIRPORT TUNNEL BARRIER TOLL PLAZA

ELECTRICAL POWER/COMMUNICATION PLANS

AGUIRRE corporation
12700 PARK CENTRAL DRIVE
15 TH FLOOR
DALLAS TEXAS 75251
TEL. (972) 788-1600

SECTION XIII

CHECKED RLD DATE 12/18/97
CHECKED DATE 12/18/97
DESIGNED FA DATE 12/20/96
SCALE AS NOTED
CONTRACT NO. DNT-290 SHEET 48 OF 53

AT-E3.1

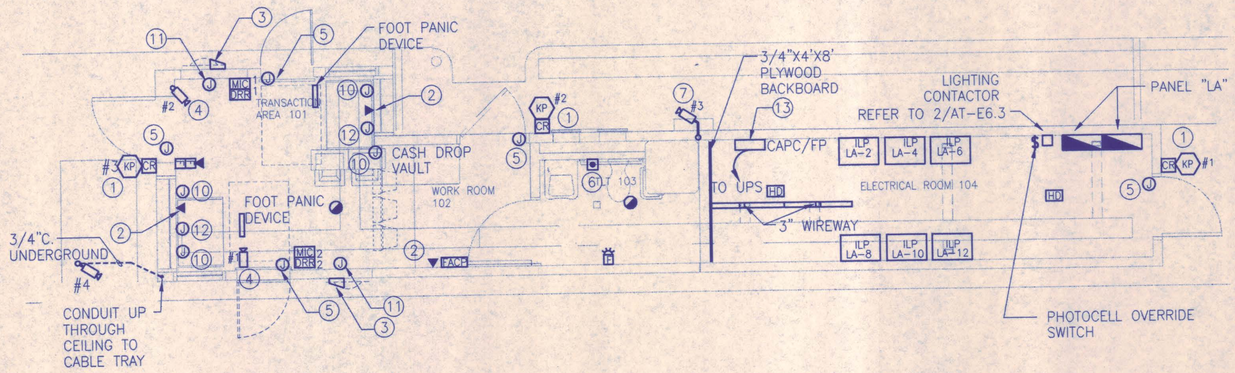

2 ELEC. BOOTH COMMUNICATIONS PLAN

SCALE: 1/4" = 1'-0"

TAATECB1.DWG

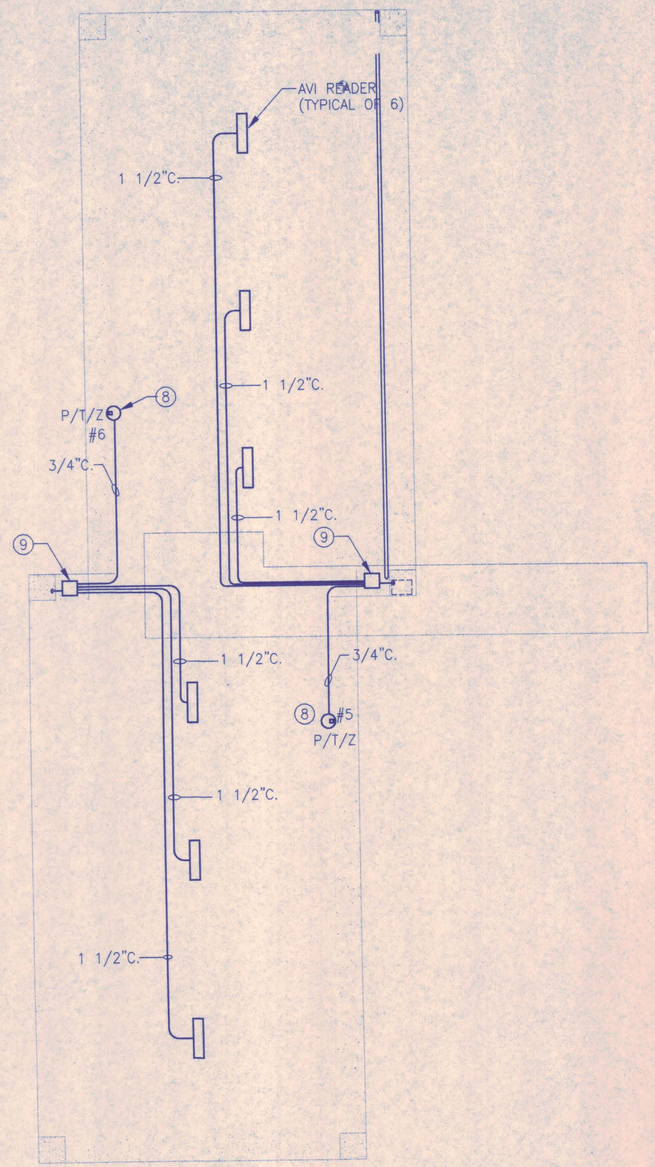

1 ELEC. CANOPY COMMUNICATIONS PLAN

SCALE: 1/8" = 1'-0"

TAATECC1.DWG

PLAN NORTH

GENERAL NOTES

1. PROVIDE PULL STRING WITH ALL COMMUNICATION CONDUITS.
2. FOR EXACT LOCATION OF EQUIPMENT IN BOOTH REFER TO ARCHITECTURAL SHEET AT-A10.1.
3. ALL ILP CONTROL WIRING TO RUN IN CONDUIT FROM TRENCH TO LOCATIONS AS SHOWN. TERMINATE CONDUITS WITH BUSHING.
4. ALL COMMUNICATION CONDUITS IN THE TOLLBOOTH TO BE 3/4"C UNLESS STATED OTHERWISE.
5. ALL CONDUITS TO CABLE TRAY SHALL TERMINATE WITH BUSHINGS.
6. CABLES ABOVE CEILING SHALL BE PLENUM RATED IF CEILING SPACE IS USED FOR RETURN AIR. COORDINATE WITH MECHANICAL.

KEY NOTES

1. CARD READER/KEY PAD REFER TO 4/AT-E6.1
2. 4"x4" J-BOX FLUSHED IN WALL AT 44" AFF FOR TELEPHONE. RUN 3/4" C WITH PULLSTRING TO CABLE TRAY ABOVE.
3. 4"x4" WEATHER PROOF J-BOX FLUSHED IN WALL AT 46" AFF FOR PATRON FARE INDICATOR (NIC).RUN 1" C CONCEALED IN WALL TO FLOOR TRENCH.
4. CCTV CAMERA. PROVIDE 4" OCTAGONAL J-BOX ABOVE CEILING AT LOCATION INDICATED. RUN 3/4"C TO CABLE TRAY.
5. 4"x4" J-BOX FOR MAGNETIC DOOR MONITOR SWITCH AND MAGNETIC DOOR LOCKING UNIT. INSTALL BOX ABOVE CEILING PER DETAIL 4/AT-E6.1. RUN 1" C TO CABLE TRAY.
6. PANIC BUTTON/SWITCH (NIC) MOUNTED AT 36" AFF. RUN 3/4"C CONCEALED IN WALL TO CABLE TRAY.
7. WALL MOUNTED CCTV CAMERA. PROVIDE 2"x4" WEATHER PROOF J-BOX FLUSHED ON THE OUTSIDE WALL AT 6' AFF. RUN 3/4"C CONCEALED IN WALL TO CABLE TRAY.
8. PAN/TILT/ZOOM CAMERA IN WEATHERPROOF DOME. LOCATED BELOW CANOPY JOISTS.
9. COMMUNICATIONS PULLBOX. REFER TO DETAIL 3/AT-E6.1.
10. PROVIDE FLUSH MOUNTED DOUBLE GANG J-BOX FLUSHED IN WALL AT 36"A.F.F. RUN (2) 1"C TO FLOOR TRENCH FOR ILP CONTROL.
11. 4"x4" J-BOX FLUSHED IN WALL AT 4" AFF FOR THE AUTOMATIC COIN MACHINE (NIC). RUN 1"C TO FLOOR TRENCH FOR ILP CONTROL.
12. PROVIDE 4"x4" J-BOX AND RUN 1"C FROM BOX AT EACH TOLL COLLECTION TO CABLE TRAY.
13. CACP/FP. REFER TO SPECIFICATIONS FOR QUANTITY. CAPC/FP SHALL BE WIRED TO UPS SYSTEM. REFER TO DETAIL 3/AT-E7.1

12/12/97
STATE OF TEXAS
RICHARD LAWRENCE DICKERSON
69306
REGISTERED PROFESSIONAL ENGINEER

NO.	REVISION	BY	DATE

NORTH TEXAS TOLLWAY AUTHORITY

ADDISON AIRPORT TUNNEL BARRIER TOLL PLAZA

ELECTRICAL / ILP COMMUNICATIONS PLANS

AGUIRRE corporation
12700 PARK CENTRAL DRIVE
15 TH FLOOR
DALLAS TEXAS 75251
TEL (972) 788-1508

SECTION XIII

CHECKED RLP DATE 12/18/97
CHECKED RLD DATE 12/18/97
DESIGNED FA DATE 12/20/96
SCALE AS NOTED
CONTRACT NO. DNT-290 SHEET 49 OF 53

AT-E4.1

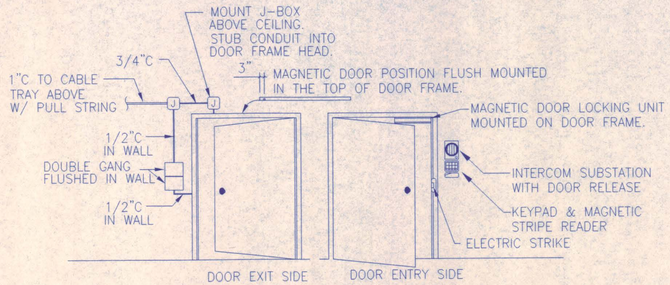

4 CARD ACCESS ENTRY DOORS

SCALE: 1/4"=1'-0" (APROX)

TAATED17.DWG

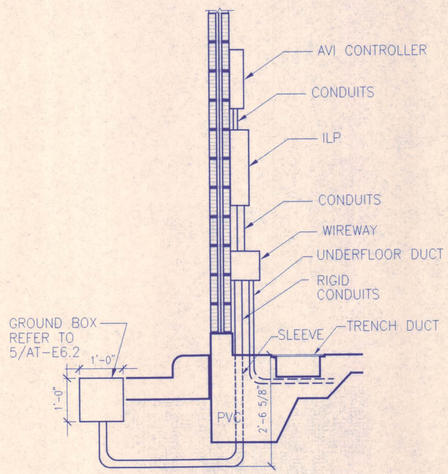

5 ELECTRICAL ILP CONDUIT DETAIL

SCALE: NONE

TAATED22.DWG

TEST GROUND ELECTRODE USING NULL-BALANCE TESTER AND DRIVE AUXILIARY RODS WHERE GROUND EXCEEDS 25 OHMS. DRIVE ADDITIONAL GROUND RODS AND CONNECT RODS TOGETHER USING #4/0 BARE COPPER. EXOTHERMIC WELD RODS AND GROUND ELECTRODE CONDUCTOR FROM DISTRIBUTION PANEL TO GROUND GRID.

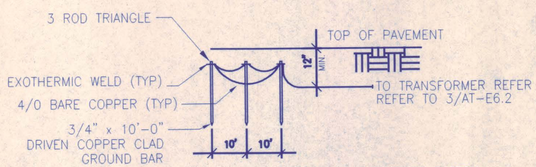

GROUNDING ELECTRODE SYSTEM INSTALLATION SHALL BE IN STRICT COMPLIANCE WITH LOCAL CODES AND AUTHORITY HAVING JURISDICTION.

6 GROUNDING ELECTRODE DETAIL

SCALE: NONE

TAATED30.DWG

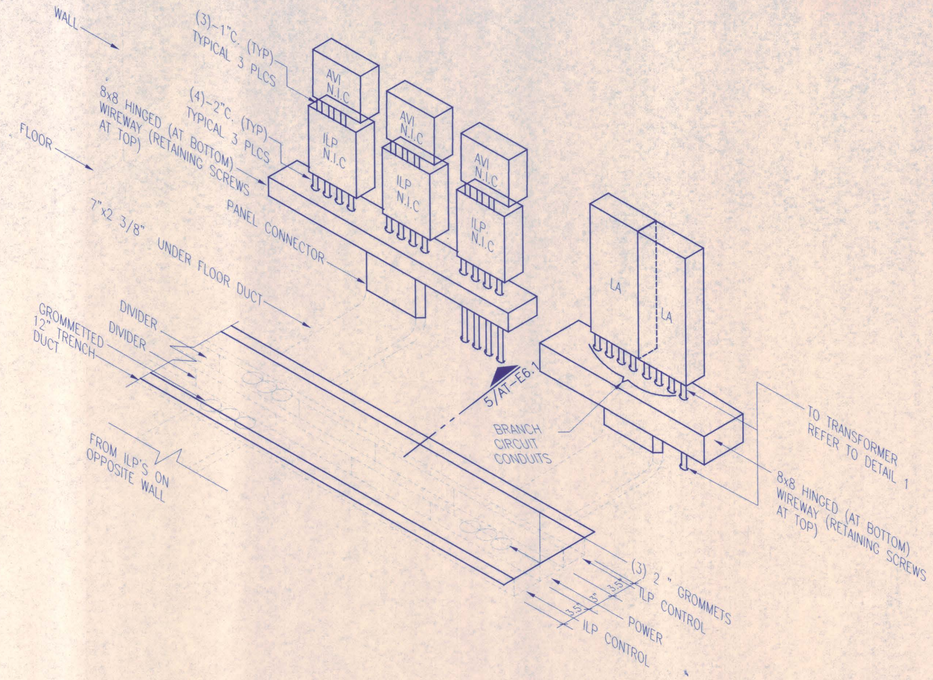

2 UNDERGROUND DUCT DETAIL

SCALE: NONE

TAATED02.DWG

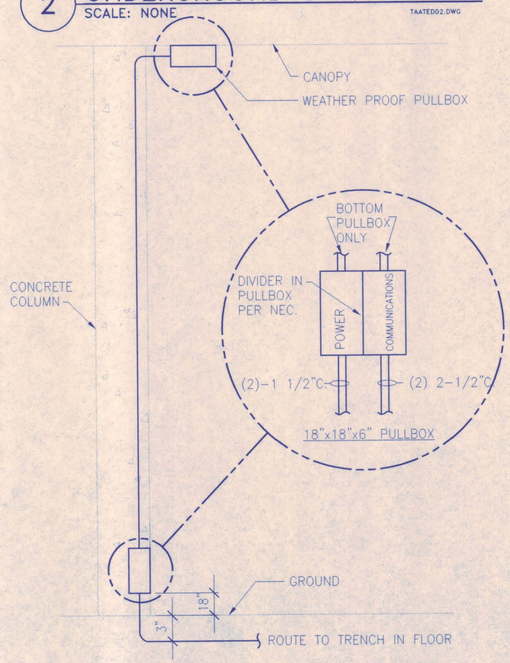

NOTE:
FOR POWER AND COMMUNICATIONS, REFER TO 2/AT-E6.1.

3 PULLBOX DETAIL

SCALE: NONE

TAATED01.DWG

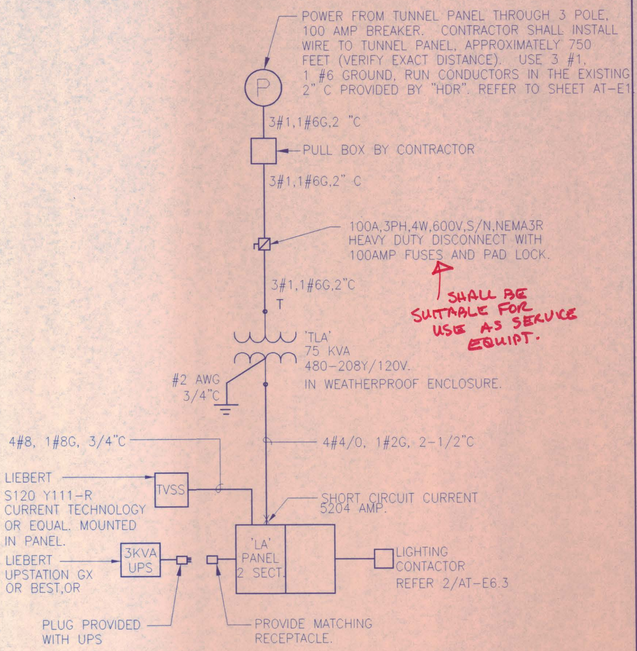

1 ELECTRICAL RISER DIAGRAM

SCALE: NONE

TAATEGL1.DWG

12/12/97
STATE OF TEXAS
RICHARD LAWRENCE DICKERSON
69306
REGISTERED PROFESSIONAL ENGINEER

NO.	REVISION	BY	DATE

NORTH TEXAS TOLLWAY AUTHORITY

ADDISON AIRPORT TUNNEL BARRIER TOLL PLAZA

ELECTRICAL RISER DIAGRAMS AND DETAILS

AGUIRRE Corporation
12700 PARK CENTRAL DRIVE
16 TH FLOOR
DALLAS TEXAS 75251
TEL (972) 788-1508

SECTION XIII

CHECKED RLD	DATE 12/18/97	DESIGNED FA	DATE 12/20/96
CHECKED	DATE 12/18/97	SCALE AS NOTED	
CONTRACT NO. DNT-290		SHEET 50	OF 53

AT-E6.1

H:\aai-proj\9603-01\DWG\ADDISON\TAAT_E7.dwg
Tue Dec 16 15:15:33 1997

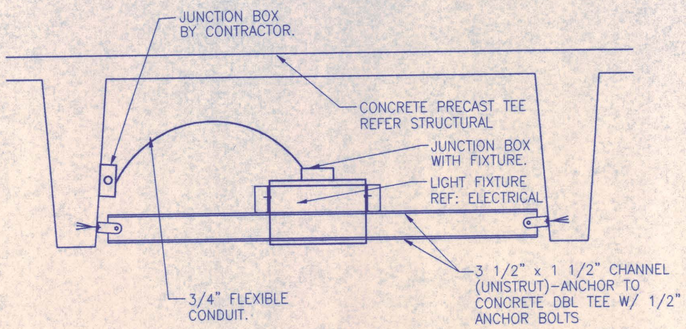

6 UNDER CANOPY LIGHTS
N.T.S. TAATED25

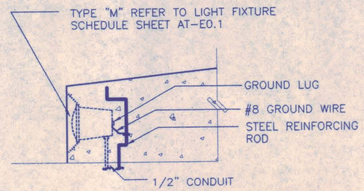

4 TOLL COLLECTION LIGHT DTL.
N.T.S. TAATED07

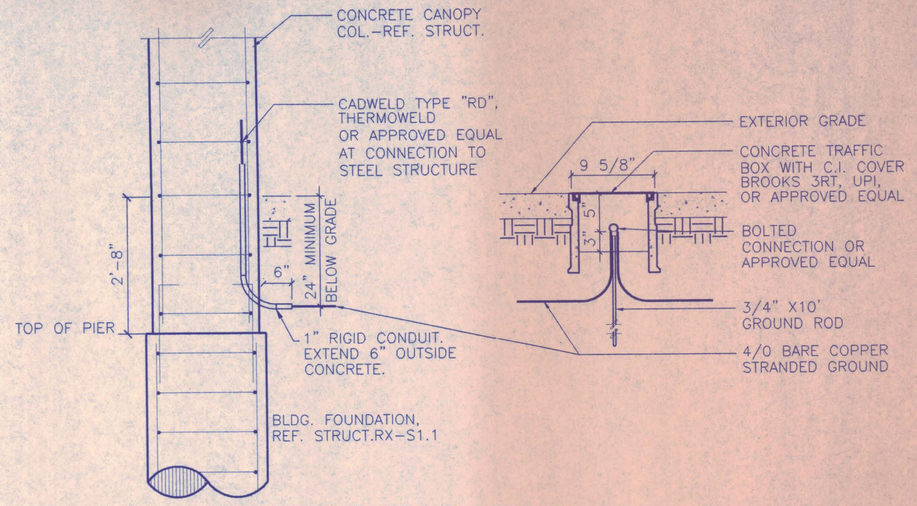

1 GROUNDING DETAILS
N.T.S. TAATED09

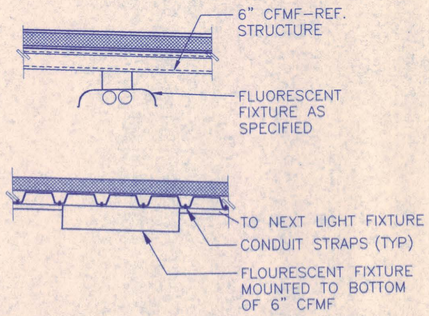

7 FIXTURE MOUNTING DETAIL
N.T.S. TAATED15

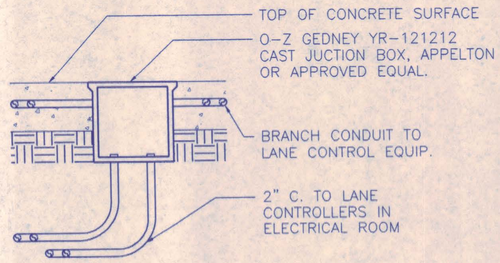

5 LANE CONTROL JUNCT. BOX
N.T.S. TAATED13

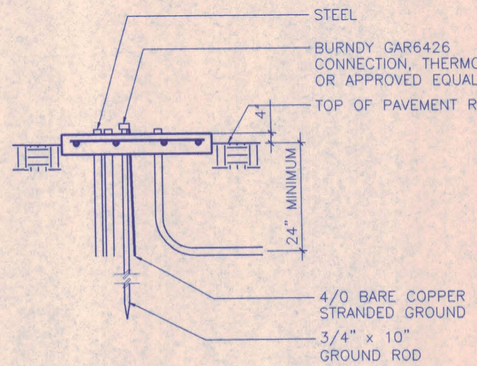

3 TRANSFMR. PAD/GROUNDING
N.T.S. TAATED08

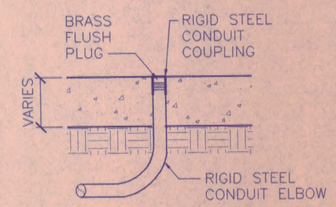

NOTE: COAT THREADS OF PLUG WITH ANTI-SEIZE COMPOUND PRIOR TO THREADING INTO CONDUIT.

2 CONDUIT FLUSH TERMIN.
N.T.S. TAATED10

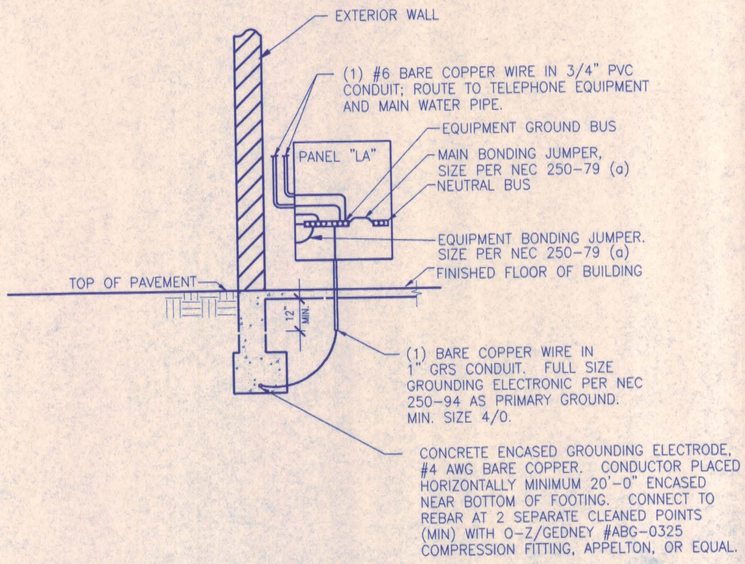

8 GROUNDING ELECTRODE DETAIL
N.T.S. TAATED24

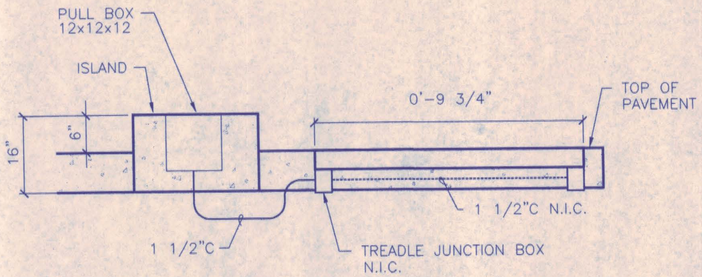

NOTE

REFER TO CIVIL DRAWING SHEET RX_C3.2.
CONTRACTOR TO VERIFY EXACT REQUIREMENT
WITH TREADLE INSTALLER.

9 TREADLE DETAIL
N.T.S. TAATED29

12/18/97
STATE OF TEXAS
RICHARD LAWRENCE DICKSON
69306
REGISTERED PROFESSIONAL ENGINEER

NO.	REVISION	BY	DATE

NORTH TEXAS TOLLWAY AUTHORITY

ADDISON AIRPORT TUNNEL BARRIER TOLL PLAZA

ELECTRICAL DETAILS

AGUIRRE Incorporation
12700 PARK CENTRAL DRIVE
15 TH FLOOR
DALLAS TEXAS 75251
TEL (972) 755-1005

SECTION XIII

CHECKED FLD DATE 12/18/97 DESIGNED FA DATE 12/20/96
CHECKED JSG DATE 12/18/97 SCALE N.T.S.
CONTRACT NO. DNT-290 SHEET 51 OF 53

AT-E6.2

H:\aai-proj\9603-01\DWG\ADDISON\TAAT_E62.dwg

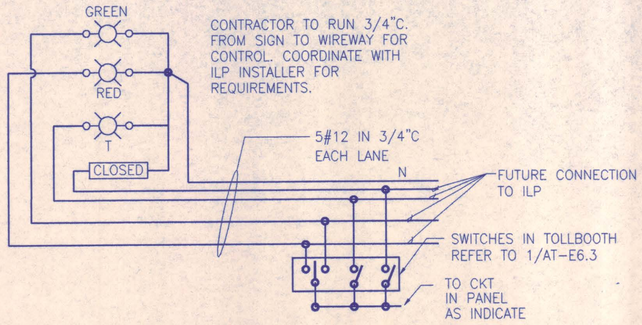

3 RED/T/GREEN LIGHTS

N.T.S. TAATED27

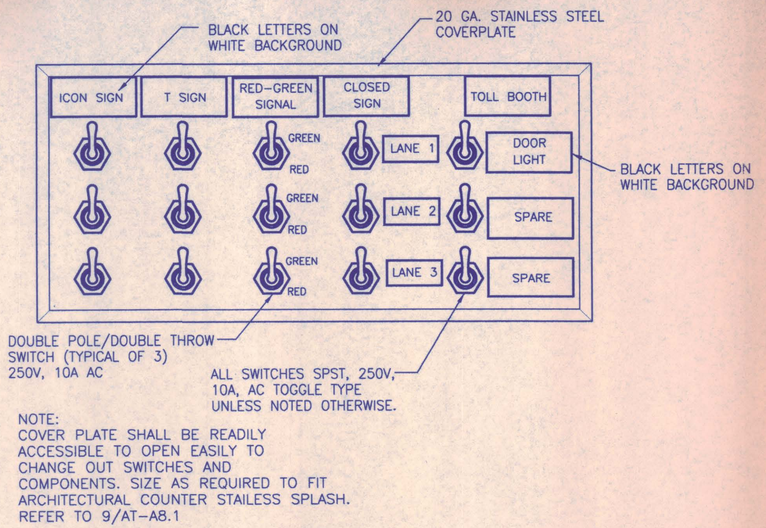

NOTE:
COVER PLATE SHALL BE READILY ACCESSIBLE TO OPEN EASILY TO CHANGE OUT SWITCHES AND COMPONENTS. SIZE AS REQUIRED TO FIT ARCHITECTURAL COUNTER STAILESS SPLASH. REFER TO 9/AT-A8.1

1 SWITCH CONTROL PANEL LAYOUT

N.T.S. TAATED26

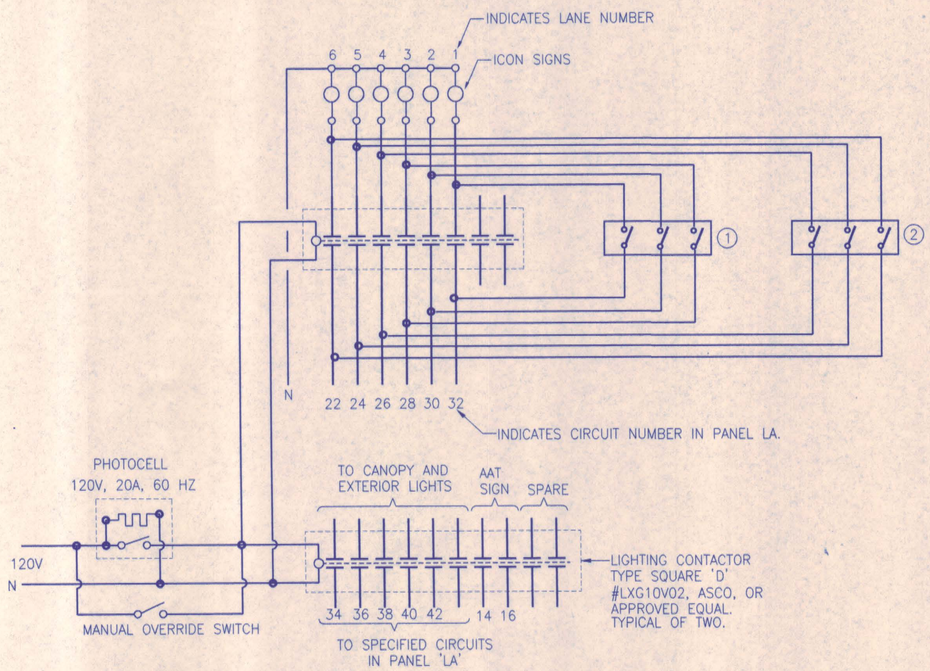

(1) ICON SIGN SWITCHES FOR LANES 1,2,3. REFER TO SWITCH CONTROL PANEL LAYOUT DETAIL 1/AT-E6.3

(2) ICON SIGN SWITCHES FOR LANES 4,5,6. REFER TO SWITCH CONTROL PANEL LAYOUT DETAIL 1/AT-E6.3

2 LIGHTING/ICON SIGN CONTROL DETAIL

N.T.S. TAATED28

12/18/97
STATE OF TEXAS
ROMEO LAWRENCE DOUGLAS
69306
REGISTERED PROFESSIONAL ENGINEER

NO.	REVISION	BY	DATE

NORTH TEXAS TOLLWAY AUTHORITY

ADDISON AIRPORT TUNNEL BARRIER TOLL PLAZA

ELECTRICAL DETAILS

AGUIRRE AGUIRRE Corporation
12700 PARK CENTRAL DRIVE
15 TH FLOOR
DALLAS TEXAS 75251
TEL (972) 788-1808

SECTION XIII

CHECKED BJP DATE 12/18/97 DESIGNED FA DATE 12/20/96
CHECKED FEG DATE 12/18/97 SCALE N.T.S.

CONTRACT NO. DNT-290 SHEET 52 OF 53

AT-E6.3

H:\aai-proj\9603-01\DWG\ADDISON\TAAT_E63.dwg
Fri Dec 12 10:36:56 1997

THE ADDISON TUNNEL AND BOOTH SYSTEM

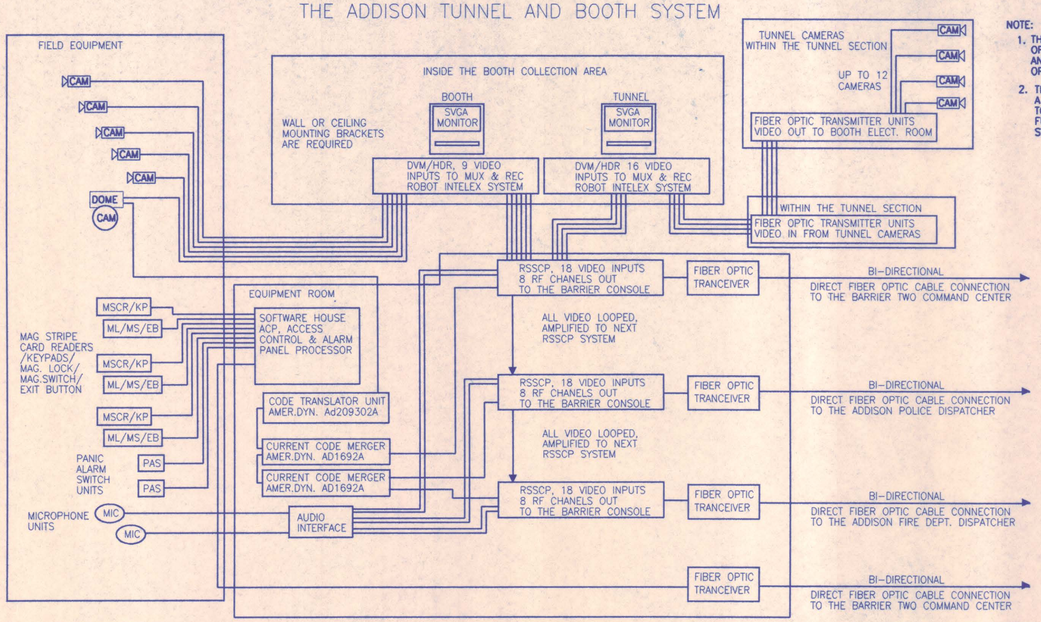

NOTE:

1. THE RISER DIAGRAM IS AN ILLUSTRATION ONLY. OF THE REQUIRED SYSTEM EQUIPMENT LAYOUT AND INTERCONNECTION FOR A COMPLETE AND OPERATIONAL ELECTRONIC SECURITY SYSTEM.
2. THE CONTRACTOR IS ULTIMATELY RESPONSIBLE FOR A COMPLETE AND WORKING SYSTEM WHICH CONFORMS TO THE DESIRED OPERATIONAL FEATURES AND FUNCTIONS AS DESCRIBED WITHIN THE WRITTEN SYSTEM SPECIFICATIONS.

2 SECURITY AND CCTV RISER

NONE TAATEOL4.DWG

PANEL LA , SECTION 1 OF 2 , SURFACE MOUNTED , SERVES ADDISON TUNNEL PLAZA LOCATION ELEC RM 104

225 AMP MCB , 208Y/120 VOLTS , 3 PHASE , 4 WIRE S/N AIC 10,000

CONN KVA	DESCRIPTION	TRIP AMPS	POLES	CKT NO	PHASE A	PHASE B	PHASE C	CKT NO	POLES	TRIP AMPS	DESCRIPTION	CONN KVA	
0.54	RECEPTACLES	20	1	1				2	1	20	ILP	1.2	
1.00	UNDER COUNTER HTR	20	1	3				4	1	20	ILP	1.2	
0.36	ACM/PTD	20	1	5				6	1	20	ILP	1.2	
0.54	RECEPTACLES	20	1	7				8	1	20	ILP	1.2	
1.00	UNDER COUNTER HTR	20	1	9				10	1	20	ILP	1.2	
0.36	ACM/PTD	20	1	11				12	1	20	ILP	1.2	
0.75	MICROWAVE	20	1	13				14	1	20	AAT SIGN	0.50	*
0.50	REFRIGERATOR	20	1	15				16	1	20	AAT SIGN	0.50	*
0.2	HEAT TRACE	20	1	17				18	1	20	BILL CHANGER	0.50	
0.40	CCTV (4) #1, #2, #3, #4	20	1	19				20	1	20	BILL CHANGER	0.50	
0.60	CCTV #5	20	1	21				22	1	20	EXIT ICON SIGN	0.50	*
0.60	CCTV #6	20	1	23				24	1	20	EXIT ICON SIGN	0.50	*
0.50	FACP	20	1	25				26	1	20	EXIT ICON SIGN	0.50	*
0.54	SECURITY MONITOR	20	1	27				28	1	20	ENTRY SIGN ICON	0.50	*
0.36	TELEPHONE	20	1	29				30	1	20	ENTRY SIGN ICON	0.50	*
0.72	RECEPTACLES	20	1	31				32	1	20	ENTRY SIGN ICON	0.50	*
0.54	RECEPTACLES	20	1	33				34	1	20	CANOPY LIGHTS	0.90	*
0.36	RTU'S RECEPTACLES	20	1	35				36	1	20	CANOPY LIGHTS	0.90	*
1.00	RACK PLUGMOLD	20	1	37				38	1	20	CANOPY LIGHTS	0.90	*
1.00	RACK PLUGMOLD	20	1	39				40	1	20	CANOPY LIGHTS	0.90	*
1.00	RACK PLUGMOLD	20	1	41				42	1	20	EXTERIOR BOOTH LIGHTS	0.90	*

REMARKS:

* RUN CIRCUITS THRU CONTACTORS CONTROLLED BY PHOTOCELL AND/OR OVERRIDE SWITCH.

NOTES:

1. PROVIDE SUBFEED THRU LUGS FOR SECTION TWO PANEL.
2. INSTALL TVSS IN PANEL. LIEBERT S120Y111-R OR EQUAL.

PANEL LA , SECTION 2 OF 2 , SURFACE MOUNTED , SERVES ADDISON TUNNEL PLAZA LOCATION ELEC RM 104

225 AMP MLO , 208Y/120 VOLTS , 3 PHASE , 4 WIRE S/N 10,000

CONN KVA	DESCRIPTION	POLES	TRIP AMPS	CKT NO	PHASE A	PHASE B	PHASE C	CKT NO	TRIP AMPS	POLES	DESCRIPTION	CONN KVA
11.2	RTU-2		45	43				44	30	1	WATER HEATER	1.5
				45				46	20	1	WATER CHILLER	0.164
		3		47				48	20	1	BOOTH LIGHTS	0.72
5.40	RTU-1		20	49				50	20	1	SPARE	–
		2		51				52	20	1	SPARE	–
3.00	UPS		20	53				54	20	1	SPARE	–
		2		55				56	20	1	SPARE	–
–	SPARE	1	20	57				58	20	1	SPARE	–
–	SPARE	1	20	59				60	20	1	SPARE	–
–	SPARE	1	20	61				62	–	–	SPACE	–
–	SPACE	–	–	63				64	–	–	SPACE	–
–	SPACE	–	–	65				66	–	–	SPACE	–
–	SPACE	–	–	67				68	–	–	SPACE	–
–	SPACE	–	–	69				70	–	–	SPACE	–
–	SPACE	–	–	71				72	–	–	SPACE	–
–	SPACE	–	–	73				74	–	–	SPACE	–
–	SPACE	–	–	75				76	–	–	SPACE	–
–	SPACE	–	–	77				78	–	–	SPACE	–
–	SPACE	–	–	79				80	–	–	SPACE	–
–	SPACE	–	–	81				82	–	–	SPACE	–
–	SPACE	–	–	83				84	–	–	SPACE	–

REMARKS:

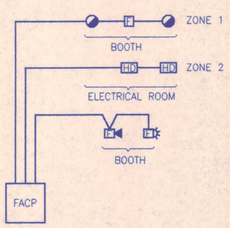

1 FIRE ALARM RISER

NONE TAATEOL2.DWG

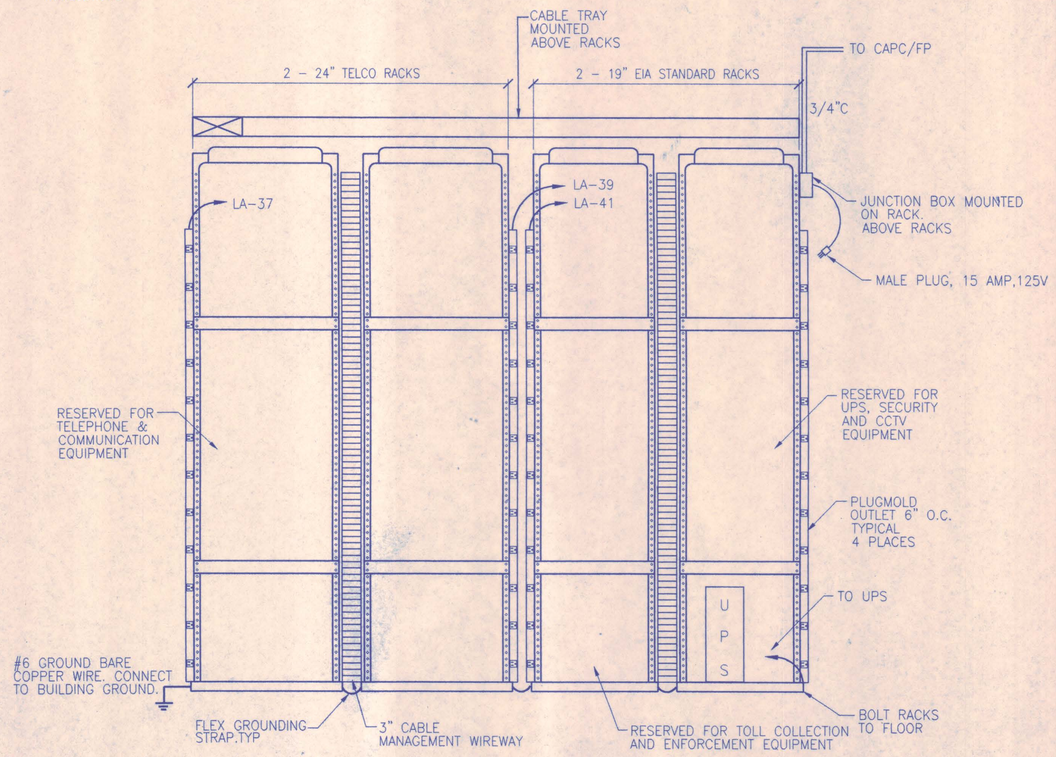

3 PLUGMOLD ALONG CABLE RACK

1"=1'-0" TAATED18.DWG

AT-E7.1

12/18/97

STATE OF TEXAS
RICHARD LAWRENCE DICKESON
69306
REGISTERED
PROFESSIONAL ENGINEER

NO.	REVISION	BY	DATE

NORTH TEXAS TOLLWAY AUTHORITY

ADDISON AIRPORT TUNNEL BARRIER TOLL PLAZA

ELECTRICAL SCHEDULES AND RISER DIAGRAMS

AGUIRRE corporation
12700 PARK CENTRAL DRIVE
16 TH FLOOR
DALLAS TEXAS 75251
TEL (972) 788-1508

SECTION XIII

CHECKED BY DATE 12/18/97 DESIGNED FA DATE 12/20/96

CHECKED DATE 12/18/97 SCALE AS NOTED

CONTRACT NO. DNT-290 SHEET 53 OF 53

H:\aai-proj\9603-01\DWG\ADDISON\taat_E8.dwg

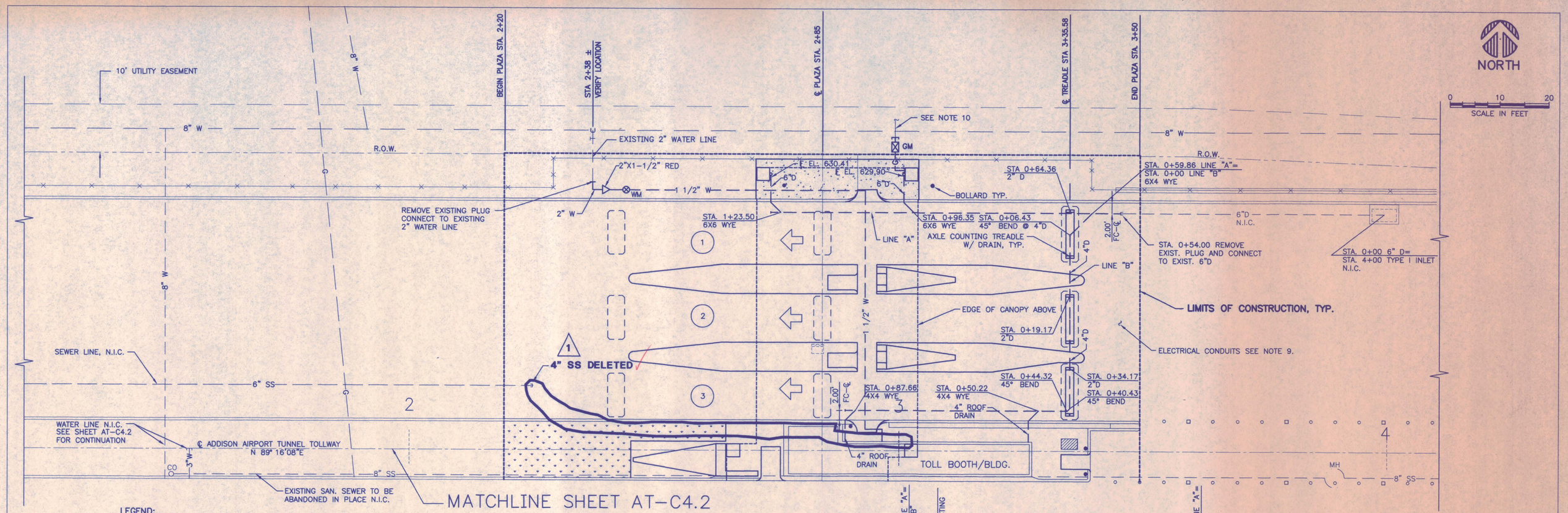

LEGEND:

NEW

- —W— WATER LINE
- —G— GAS LINE
- —SS— SANITARY SEWER LINE
- —D— DRAIN LINE
- —⊗— WATER METER (WM)
- —⊠— GAS METER (GM)

EXISTING OR BY OTHERS

- —W-T— WATER LINE W/VALVE
- —G— GAS LINE
- —D— DRAIN LINE
- (MH) —SS—○— CO SANITARY SEWER LINE W/MH AND CO

NOTES:

1. SEE GENERAL NOTES ON SHEET AT-C1.1.
2. ALL WATER, SANITARY SEWER, AND DRAINAGE CONSTRUCTION SHALL CONFORM TO THE TOWN OF ADDISON STANDARDS, AND NORTH CENTRAL TEXAS COUNCIL OF GOVERNMENTS STANDARD SPECIFICATIONS FOR PUBLIC WORK CONSTRUCTION.
3. ALL WATER LINES SHALL BE TYPE K COPPER PIPE CONFORMING TO ASTM B88.
4. ALL SANITARY SEWER LINES AND DRAIN LINES SHALL BE SDR-35 PVC PIPE.
5. EMBEDMENT FOR ALL PVC SANITARY SEWER LINES AND DRAIN LINES SHALL BE CLASS 4 EMBEDMENT CONFORMING TO TOWN OF ADDISON STANDARD CONSTRUCTION DETAILS.
6. CONTRACTOR SHALL PROVIDE SHEETING AND SHORING AS REQUIRED TO PROTECT EXISTING UTILITIES AND STRUCTURES.
7. PROVIDE A MINIMUM OF 3' COVER FOR ALL UTILITIES UNLESS OTHERWISE NOTED.
8. REFER TO PLUMBING DRAWINGS FOR CONTINUATION OF WATER AND SANITARY SEWER LINES TO TOLL BOOTH BUILDING.
9. REFER TO ELECTRICAL DRAWINGS FOR ELECTRICAL CONDUIT LOCATIONS.
10. CONNECTION TO EXISTING GAS LINE WILL BE PROVIDED BY LONE STAR GAS. THE CONTRACTOR SHALL COORDINATE WITH LONE STAR GAS TO DETERMINE THE EXACT LOCATION OF THE SERVICE BEYOND THE METER.
11. GAS METER AND REGULATOR TO PROVIDE 30 CFH AT MEDIUM PRESSURE 2 PSI TO 1.5 PSI.

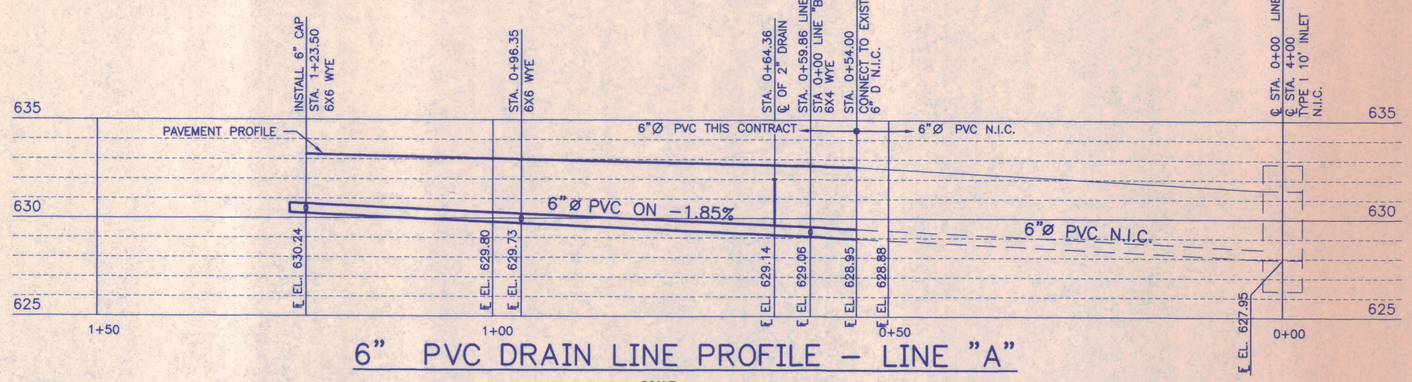

6" PVC DRAIN LINE PROFILE – LINE "A"

SCALE
HORZ: 1"= 10'
VERT: 1"= 4'

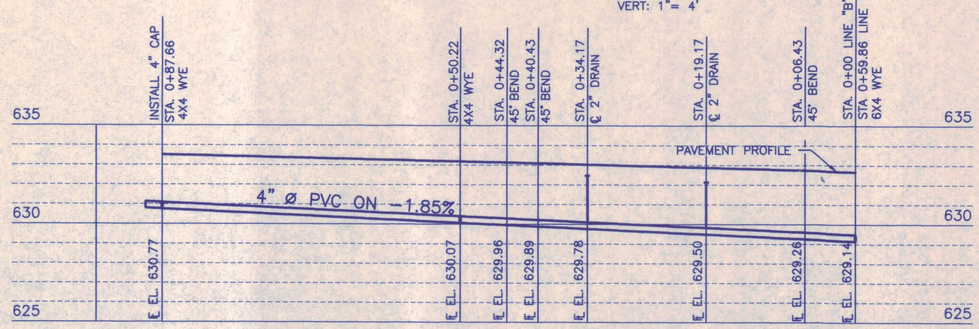

4" PVC DRAIN LINE PROFILE – LINE "B"

SCALE
HORZ: 1"= 10'
VERT: 1"= 4'

ADDENDUM NO. 1

Chiang, Patel & Yerby, Inc.
Consulting Engineers • Planners • Project Managers
Dallas • Fort Worth • Houston • San Antonio

AT-C4.1

1/21/98

STATE OF TEXAS
THAKOR J. SHETH
61192
REGISTERED PROFESSIONAL ENGINEER

NO.	REVISION	BY	DATE
1	DELETED 4" S.S. WEST OF TOLL BOOTH	TJS	1/21/98

NORTH TEXAS TOLLWAY AUTHORITY

ADDISON AIRPORT TUNNEL

UTILITY PLAN AND PROFILE A

AGUIRRE ASSOCIATES INC
12700 PARK CENTRAL DRIVE
15 TH FLOOR
DALLAS TEXAS 75251
TEL (972) 788-1508

SECTION XIV

DRAWN WAB DATE 8/28/97 DESIGNED WAB DATE 12/20/96
CHECKED TJS DATE 11/5/97 SCALE 1"=10'-0"

CONTRACT NO. DNT-290 SHEET 9 OF 53

105021A AT-C41.DWG

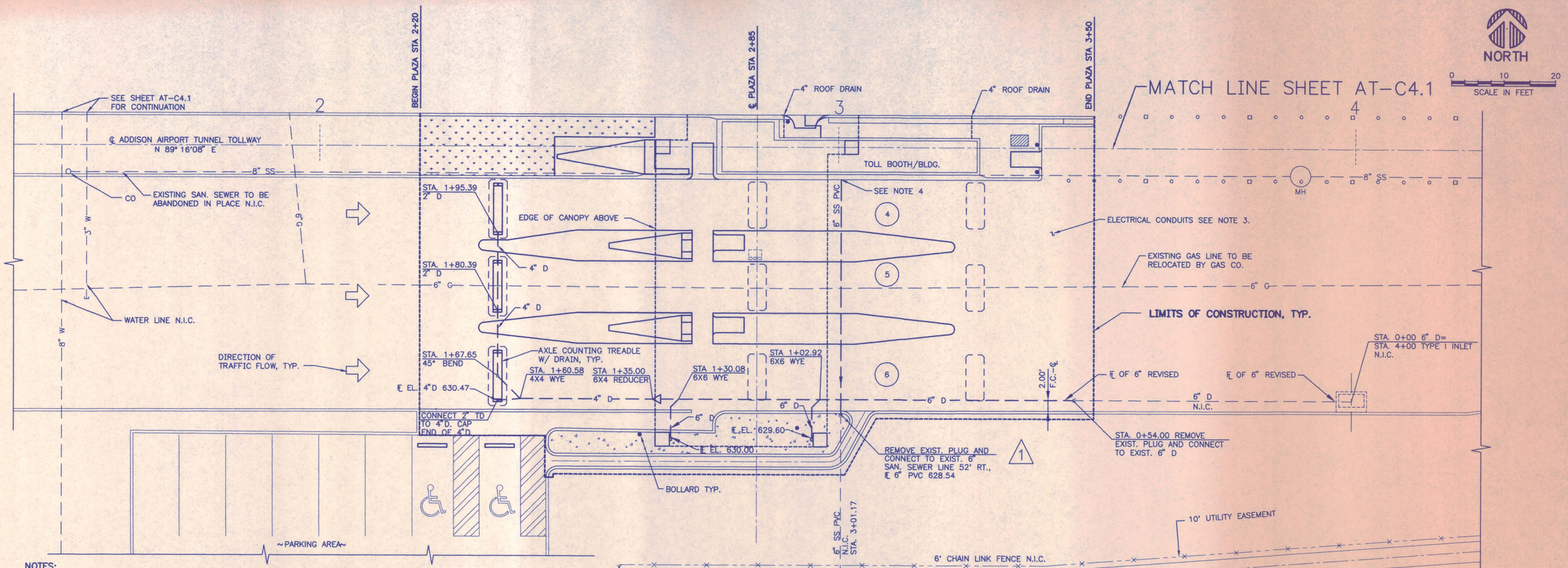

NOTES:

1. SEE GENERAL NOTES ON SHEET AT-C1.1.
2. ALL WATER, SANITARY SEWER, AND DRAINAGE CONSTRUCTION SHALL CONFORM TO THE TOWN OF ADDISON STANDARDS, AND NORTH CENTRAL TEXAS COUNCIL OF GOVERNMENTS STANDARD SPECIFICATION FOR PUBLIC WORK CONSTRUCTION.
3. REFER TO ELECTRICAL DRAWINGS FOR ELECTRICAL CONDUIT LOCATIONS.
4. REFER TO PLUMBING DRAWINGS FOR CONTINUATION OF WATER AND SEWER LINE TO TOLL BOOTH/BUILDING.
5. DRAIN SHALL BE SDR-35 PVC PIPE. EMBEDMENT FOR PVC DRAIN LINES SHALL BE CLASS 4 EMBEDMENT CONFORMING TO TOWN OF ADDISON STANDARD CONSTRUCTION DETAILS.
6. CONTRACTOR SHALL PROVIDE SHEETING AND SHORING AS REQUIRED TO PROTECT EXISTING UTILITIES AND STRUCTURES.

LEGEND:

NEW

- —W— WATER LINE
- —G— GAS LINE
- —SS— SANITARY SEWER LINE
- —D— DRAIN LINE

EXISTING OR BY OTHER

- —W—T— WATER LINE W/VALVE
- —G— GAS LINE
- —D— DRAIN LINE
- —SS— MH —CO— SANITARY SEWER LINE W/MH AND CO

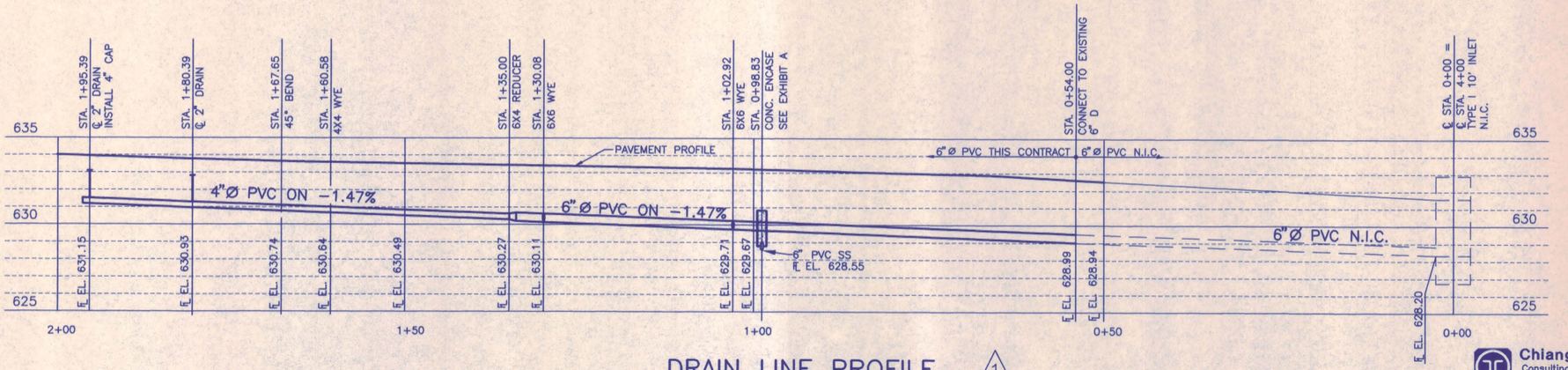

DRAIN LINE PROFILE 1

SCALE
HORZ: 1" = 10'
VERT: 1" = 4'

Chiang, Patel & Yerby, Inc.
Consulting Engineers • Planners • Project Managers
Dallas • Fort Worth • Houston • San Antonio

AT-C4.2

1/21/98

STATE OF TEXAS
THAKOR J. SHETH
61192
REGISTERED PROFESSIONAL ENGINEER

NO.	REVISION	BY	DATE
1	REVISED DRAIN LINE PROFILE AND ADDED SANITARY SEWER LINE AND DELETED 4" SS WEST OF TOLL BOOTH	TJS	1/21/98

NORTH TEXAS TOLLWAY AUTHORITY
ADDISON AIRPORT TUNNEL

UTILITY PLAN AND PROFILE B

AGUIRRE ASSOCIATES INC
12700 PARK CENTRAL DRIVE
15 TH FLOOR
DALLAS TEXAS 75251
TEL (972) 788-1508

SECTION XIV

DRAWN WAB DATE 8/28/97 DESIGNED WAB DATE 12/20/96
CHECKED TJS DATE 11/5/97 SCALE 1"=10'-0"

CONTRACT NO. DNT-290 SHEET 10 OF 53

131221A AT-C42.DWG

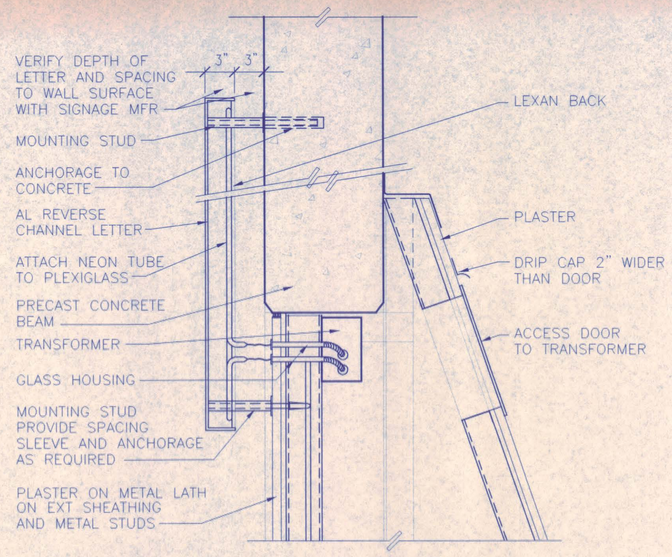

2 SIGNAGE TYPE 6 SECTION
1/4"=1'-0" TAATAD35

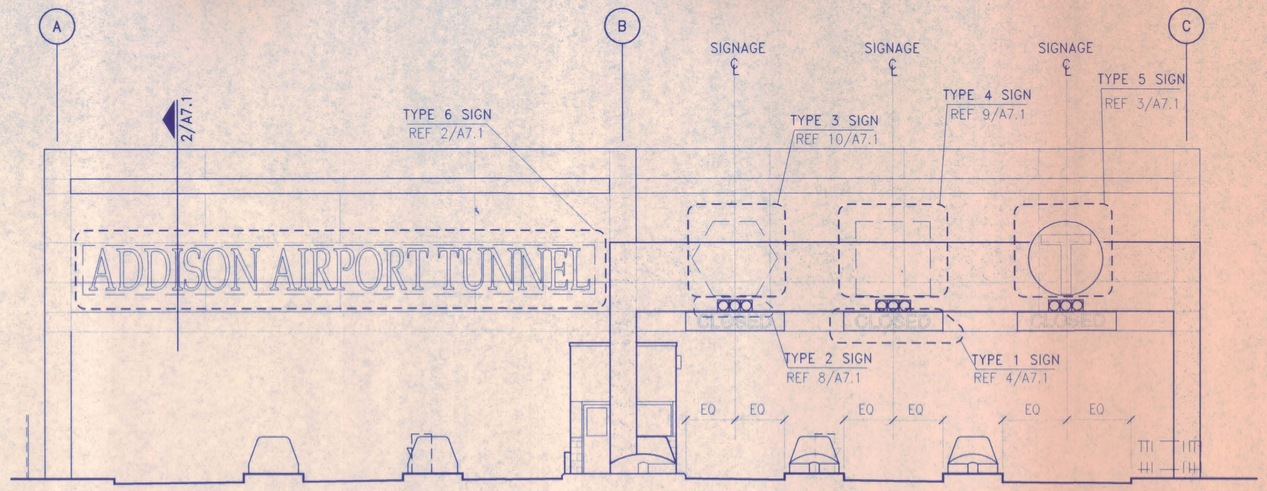

1 LOCATION OF SIGNAGE
1/8"=1'-0" TAATAEE1

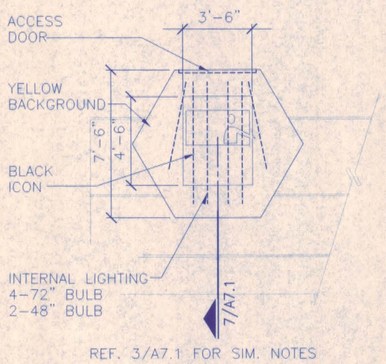

10 SIGNAGE TYPE 3 ELEVATION
1/4"=1'-0" TAATAD66

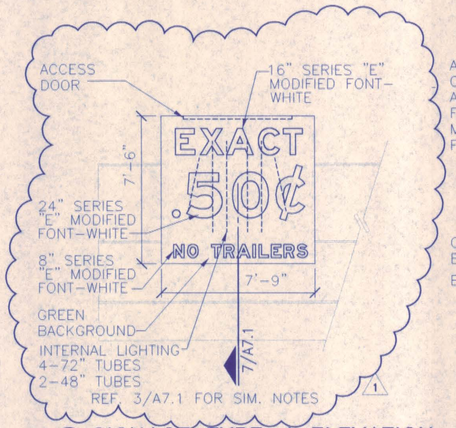

9 SIGNAGE TYPE 4 ELEVATION
1/4"=1'-0" TAATAD66

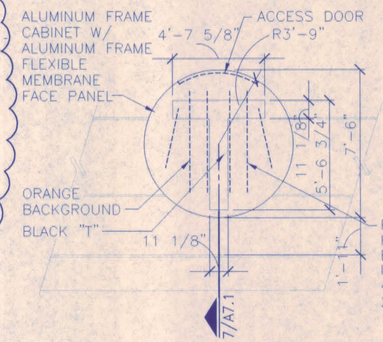

3 SIGNAGE TYPE 5 ELEVATION
1/4"=1'-0" TAATAD66

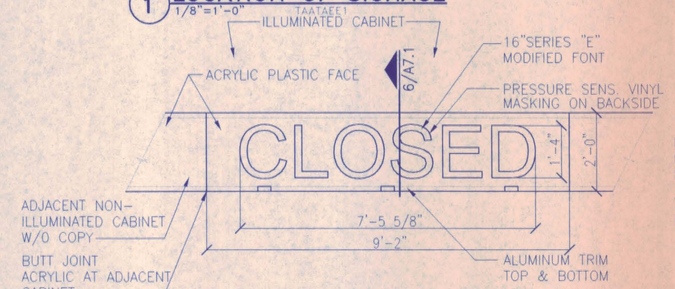

4 SIGNAGE TYPE 1
1/2"=1'-0" TAATAD65

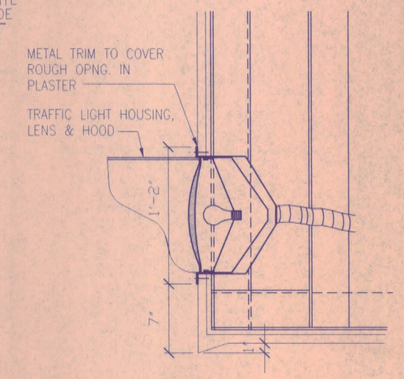

5 SECTION AT SIGN TYPE 2
1 1/2"=1'-0" TAATAD67

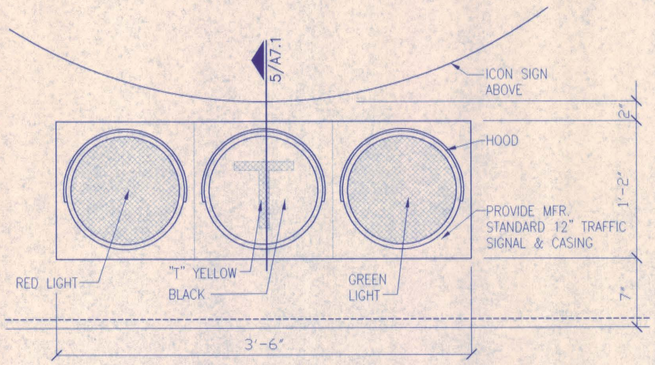

8 SIGNAGE TYPE 2
1 1/2"=1'-0" TAATAD64

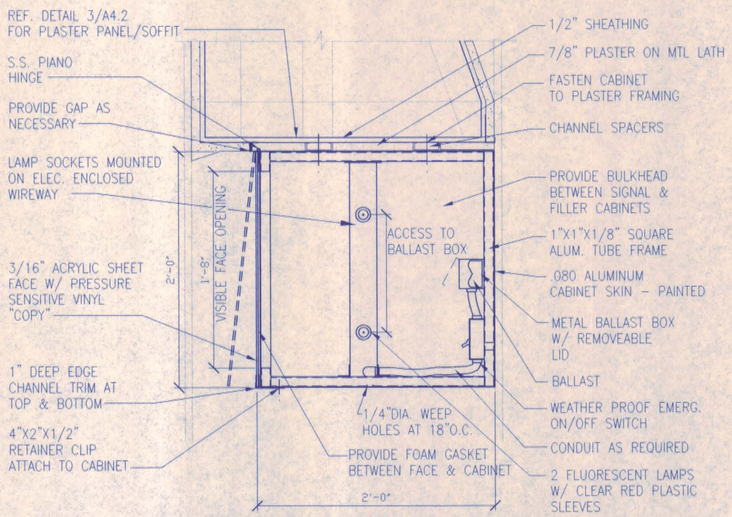

6 SECTION AT SIGN TYPE 1
1 1/2"=1'-0" TAATAD62

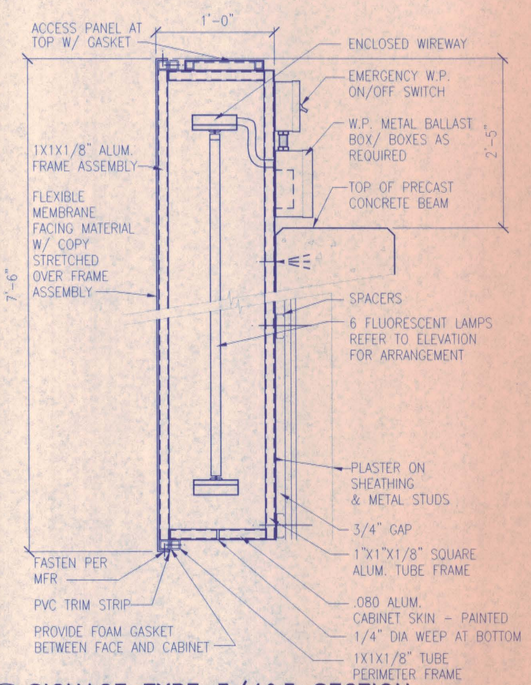

7 SIGNAGE TYPE 3/4&5 SECTION
1 1/2"=1'-0" TAATAD63

AT-A7.1

NO.	REVISION	BY	DATE
1	SIGNAGE TYPE 4 REVISION TO .50¢		1/8/98

NORTH TEXAS TOLLWAY AUTHORITY

ADDISON AIRPORT TUNNEL BARRIER TOLL PLAZA

TUNNEL PLAZA SIGNAGE DETAILS

AGUIRREcorporation
15700 PARK CENTRAL DRIVE
16 TH FLOOR
DALLAS TEXAS 75251
TEL (972) 788-1608

SECTION XIII

CHECKED DATE 1.8.98
CHECKED DATE
DESIGNED MM DATE 8/15/96
SCALE AS SHOWN

CONTRACT NO. DNT-290 SHEET 29 OF 53

H:\adi-proj\9603-01\DWG\ADDISON\TAAT_A71.dwg

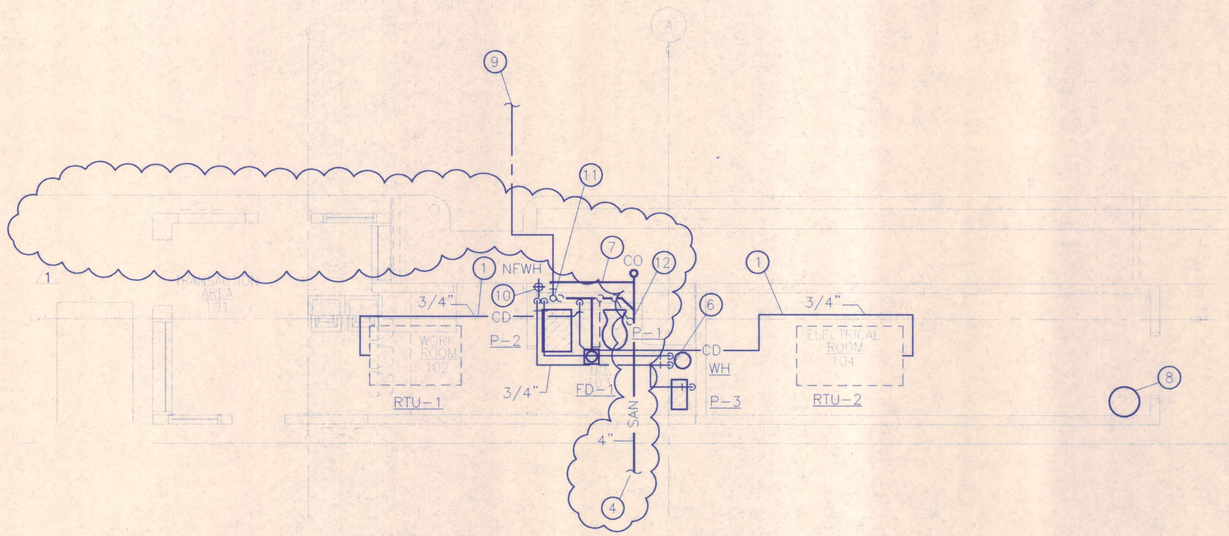

2 PLUMBING BOOTH PLAN

SCALE: 1/4" = 1'-0"

TAATPPB1

NORTH

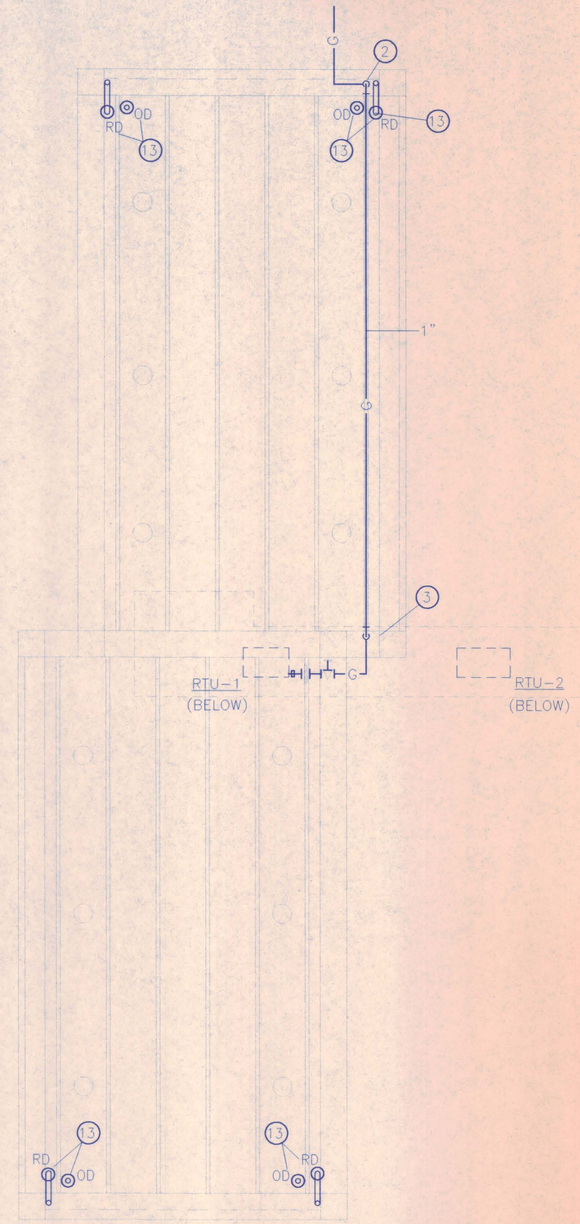

1 CANOPY PLUMBING PLAN

SCALE: 1/8" = 1'-0"

TAATMPC1

NORTH

PLUMBING FIXTURE CONNECTION SCHEDULE

TAG	DESCRIPTION	CONNECTION				REMARKS
		CW	HW	SAN	VENT	
P-1	WATER CLOSET	1"	–	4"	2"	HANDICAP ACCESSIBLE
P-2	LAVATORY	1/2"	1/2"	2"	1 1/2"	HANDICAP ACCESSIBLE
FD-1	FLOOR DRAIN	–	–	3"	2"	PROVIDE WITH TRAP PRIMER
WH	WATER HEATER	1/2"	1/2"	–	–	WITH T&P DRAIN TO EXTERIOR
P-3	WATER CHILLER	1/2"	–	–	–	

WH A.O. SMITH STOCK NO. ELSF-10, OR STATE, OR RHEEM, OR APPROVED EQUAL. 1500 WATTS/120V, 150 PSI MAXIMUM.

GENERAL NOTES

1. ALL GAS PIPE IS TO BE EXPOSED UNDER CANOPY TO RTU'S. DO NOT ENCLOSE OR COVER IN RACEWAYS WITHOUT PROPER SLEEVE.

2. PROVIDE ELECTRIC HEAT TRACE ON ALL HOT & COLD WATER PIPING EQUAL TO RAYCHEM 5XL-1, 40°F TEMPERATURE.

NOTES BY SYMBOL 'O'

1. CONDENSATE LINE ON ROOF. TRAP ABOVE ROOF AND EXTEND 3/4" DOWN TO HUB DRAIN IN PLUMBING CHASE.
2. ROUTE GAS LINE UP AT COLUMN TO UNDERSIDE OF PRECAST DOUBLE TEE ROOF STRUCTURE. PROVIDE 1 FOOT DEEP DIRT LEG WITH THREADED CAP AT BOTTOM.
3. ROUTE 1" GAS LINE DOWN COLUMN TO ROOF OF BOOTH CONNECTION TO RTU-1.
4. 4" SANITARY SEWER. I.E.= 98.0' AT BUILDING EXIT. REFER TO CIVIL FOR CONTINUATION. LOCATE ONE ADDITIONAL CLEAN-OUT AT GRADE IN ISLAND BETWEEN LANES, APPROX. 30'-0" SOUTH OF BOOTH. (NOT SHOWN)
5. NOT USED.
6. WATER HEATER ON SHELF ABOVE CEILING. FURNISH GALVANIZED PAN, 3" DEEP, 3" LARGER THAN HEATER O.D. WITH SWEATED 1/2" DRAIN LINE. ROUTE DRAIN LINE TO HUB DRAIN IN CHASE. FURNISH SHUT-OFF VALVE ON CW SUPPLY AND UNIONS AT HW/CW CONNECTIONS. ROUTE FULL SIZED DISCHARGE FROM T&P RELIEF DOWN IN CHASE AND OUT THROUGH EXTERIOR WALL NEAR NFWH AT 6" A.F.F. TERMINATE W/ 90° ELL DOWN.
7. ACCESS PANELS. REF. ARCH.
8. FIRE SUPPRESSION CANISTER FOR FM-200 SYSTEM. REF. DIV. 15 SPECIFICATIONS.
9. 1 1/2" POTABLE WATER SUPPLY. REFER TO CIVIL FOR CONTINUATION.
10. 3/4" CW DOWN TO RECESSED NFWH.
11. ROUTE 1 1/2" POTABLE WATER SUPPLY UP INTO CHASE IN SLEEVE. PROVIDE SHUT-OFF VALVE IN VERTICAL, ACCESSIBLE FROM ACCESS PANEL. PROVIDE DOUBLE-CHECK BACKFLOW PREVENTER IN HORIZONTAL.
12. 2" VENT THROUGH ROOF.
13. 4" ROOF DRAIN WITH CAST IRON LEADER, AND OVERFLOW ROOF DRAIN. REFER TO ARCHITECTURAL FOR ROUTING ALONG COLUMN.

STATE OF TEXAS
STEPHEN P. LEARY
60987
REGISTERED
PROFESSIONAL ENGINEER
1.21.97

NO.	REVISION	BY	DATE
1	DELETE 4" SS WEST FROM TOLL BOOTH	SPL	1/6/98

NORTH TEXAS TOLLWAY AUTHORITY

ADDISON AIRPORT TUNNEL BARRIER TOLL PLAZA

PLUMBING PLANS AND SCHEDULES

AGUIRREcorporation
12700 PARK CENTRAL DRIVE
16 TH FLOOR
DALLAS TEXAS 75251
TEL (972) 755-1506

SECTION XIV

CHECKED DATE 12-18-97
CHECKED DATE 12/18/97
DESIGNED JCN DATE 12/20/96
SCALE AS NOTED
CONTRACT NO. DNT-290 SHEET 43 OF 53

AT-P1.1