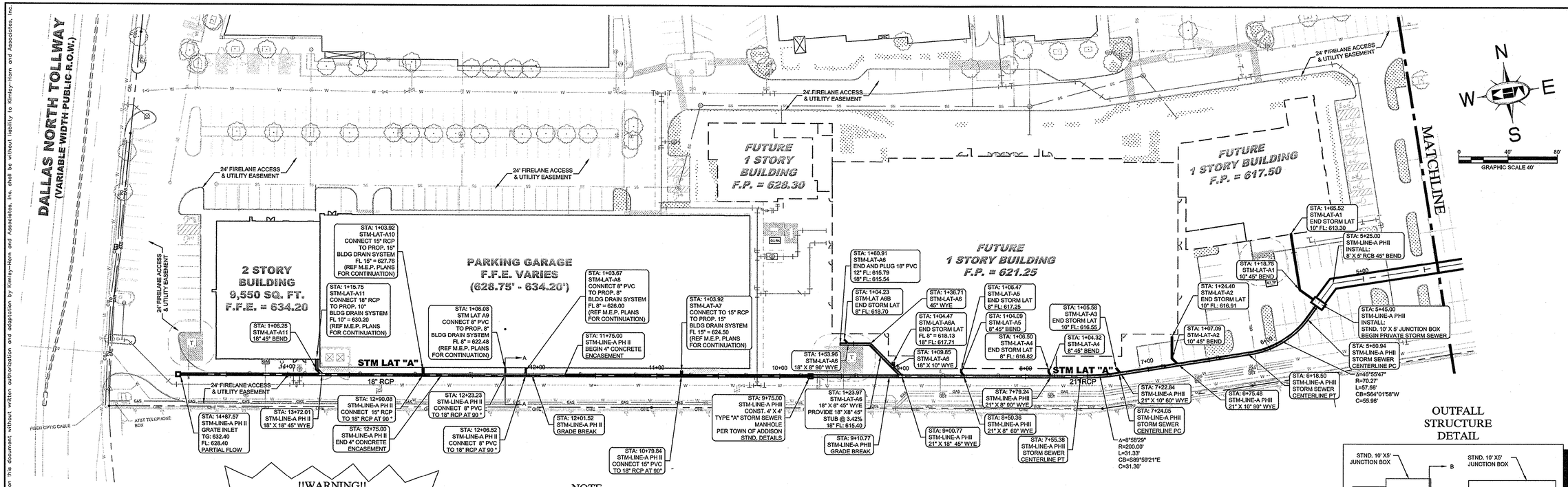

!!WARNING!!

EXISTING UTILITIES IN THE AREA. CONTRACTOR SHALL FIELD VERIFY THE LOCATION OF ALL EXISTING UTILITIES WITH THE PROVIDER PRIOR TO START OF CONSTRUCTION AND SHALL IMMEDIATELY NOTIFY THE ENGINEER OF ANY CONFLICTS DISCOVERED. CONTRACTOR IS RESPONSIBLE FOR COORDINATING UTILITY RELOCATION WHERE NECESSARY AND PROTECTING EXISTING UTILITIES (SHOWN OR NOT SHOWN). IF ANY EXISTING UTILITIES ARE DAMAGED, THE CONTRACTOR SHALL REPLACE THEM AT THEIR OWN EXPENSE.

NOTE

STORM SEWER LINE "A" IS A PRIVATE LINE FROM STATION 5+45.00 TO STATION 14+87.57. PRIVATE STORM SEWER SHALL BE MAINTAINED BY THE OWNER.

STOP!

CALL BEFORE YOU DIG

DIG TESS

1-800-DIG-TESS

(at least 72 hours prior to digging)

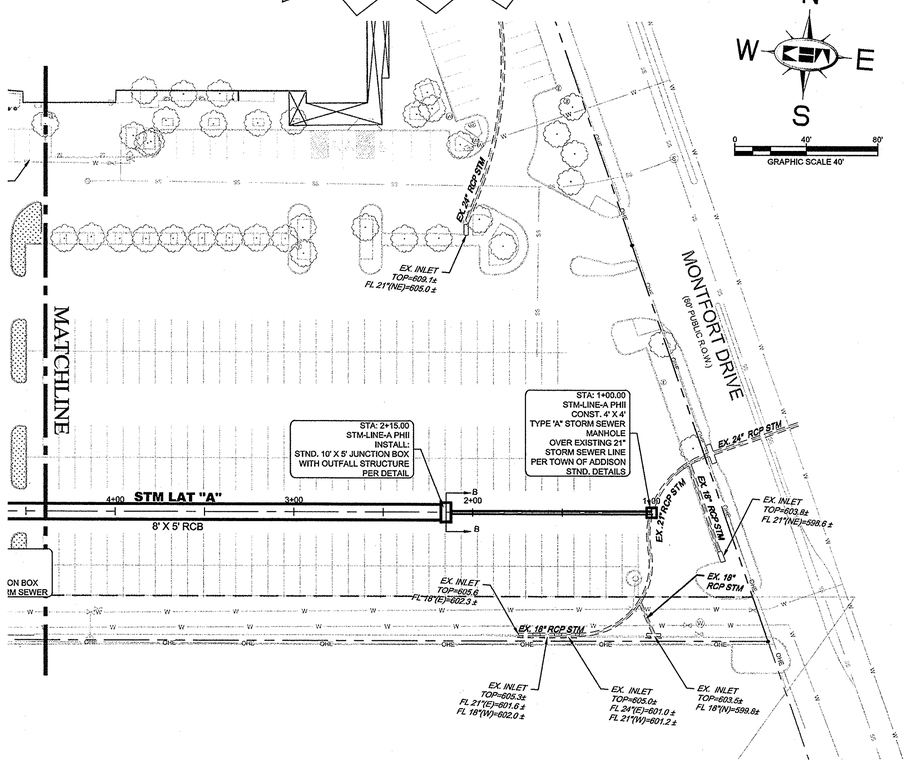

IN-GROUND DETENTION SYSTEM OUTLET CALCULATIONS

Use orifice equation to determine flow.
Q = C * A * (2 g * h)^ (1/2)
A = area of opening
C = discharge coefficient = 0.60
h = water level height above center of opening

Opening 1	
radius =	0.49 ft
area =	0.76 SF
base elev =	600.15 ft

	Weir		Orifice				
WSEL	H1	Q1	H1	Q1	Q total	Event	Q allow
600.15	0.00	0.0	0.00	0.0	0.00	OPENING 1	
600.25	0.10	0.0	0.00	0.0	0.00		
600.35	0.20	0.0	0.00	0.0	0.00		
600.45	0.30	0.0	0.00	0.0	0.00		
600.55	0.40	0.0	0.00	0.0	0.00		
600.65	0.50	0.0	0.26	1.8	1.83		
600.75	0.60	0.0	0.36	2.2	2.15		
600.85	0.00	0.0	0.46	2.4	2.44		
600.95	0.00	0.0	0.56	2.7	2.69		
601.05	0.00	0.0	0.66	2.9	2.92		
601.15	0.00	0.0	0.76	3.1	3.14		
601.25	0.00	0.0	0.86	3.3	3.34		
601.35	0.00	0.0	0.96	3.5	3.53		
601.45	0.00	0.0	1.06	3.7	3.71		
601.55	0.00	0.0	1.16	3.9	3.88		
601.65	0.00	0.0	1.26	4.0	4.05		
601.75	0.00	0.0	1.36	4.2	4.20		
601.85	0.00	0.0	1.46	4.4	4.36		
601.95	0.00	0.0	1.56	4.5	4.50		
602.05	0.00	0.0	1.66	4.6	4.65		
602.15	0.00	0.0	1.76	4.8	4.78		
602.25	0.00	0.0	1.86	4.9	4.92		
602.35	0.00	0.0	1.96	5.1	5.05		
602.45	0.00	0.0	2.06	5.2	5.18		
602.55	0.00	0.0	2.16	5.3	5.30		
602.65	0.00	0.0	2.26	5.4	5.42		
602.75	0.00	0.0	2.36	5.5	5.54		
602.85	0.00	0.0	2.46	5.7	5.66		
602.95	0.00	0.0	2.56	5.8	5.77		
603.05	0.00	0.0	2.66	5.9	5.88		
603.15	0.00	0.0	2.76	6.0	5.99		
603.25	0.00	0.0	2.86	6.1	6.10		
603.35	0.00	0.0	2.96	6.2	6.21		
603.45	0.00	0.0	3.06	6.3	6.31		
603.55	0.00	0.0	3.16	6.4	6.42		
603.65	0.00	0.0	3.26	6.5	6.52		
603.75	0.00	0.0	3.36	6.6	6.62		
603.85	0.00	0.0	3.46	6.7	6.71		
603.95	0.00	0.0	3.56	6.8	6.81		
604.05	0.00	0.0	3.66	6.9	6.90		
611.55	0.00	0.0	11.16	12.1	12.06		
611.65	0.00	0.0	11.26	12.1	12.12		
611.75	0.00	0.0	11.36	12.2	12.17		
611.85	0.00	0.0	11.46	12.2	12.22		
611.95	0.00	0.0	11.56	12.3	12.28		
612.05	0.00	0.0	11.66	12.3	12.33		
612.15	0.00	0.0	11.76	12.4	12.38		
612.25	0.00	0.0	11.86	12.4	12.43		
612.35	0.00	0.0	11.96	12.5	12.49		
612.45	0.00	0.0	12.06	12.5	12.54		
612.55	0.00	0.0	12.16	12.6	12.59		
612.65	0.00	0.0	12.26	12.6	12.64		
612.75	0.00	0.0	12.36	12.7	12.69		
612.85	0.00	0.0	12.46	12.7	12.74		
612.95	0.00	0.0	12.56	12.8	12.80		
613.05	0.00	0.0	12.66	12.8	12.85	100-yr	12.85

TRASH RACK DETAIL

N.T.S.

1. 1/4" x 4" STEEL PLATE (TYP. ALL SIDES)
2. 1"X1" STEEL ANGLES ALONG TOP EDGES
3. EXPANDED 1 1/2" METAL MESH.
4. WELD EXPANDED METAL TO INSIDE ANGLES, TOP AND SIDES TACK WELD AT ALL POINTS OF CONTACT WITH STEEL PLATES.
5. PROVIDE FULL CONTINUOUS WELD AT PLATE CONNECTIONS WITH ANGLE IRON
6. DRILL HOLES (2 EACH PLATE) SECURE WITH 1/4"X4" GALVANIZED STEEL EXPANSION ANCHORS
7. ORIFICE PLATE (PER DETAIL).

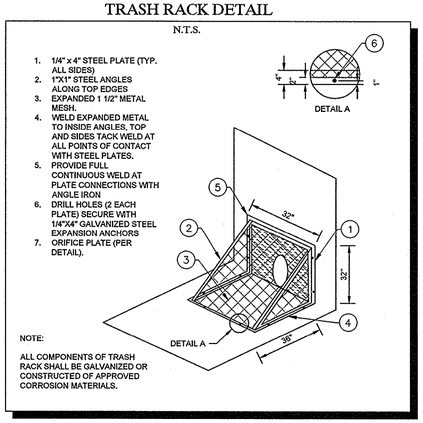

NOTE:

ALL COMPONENTS OF TRASH RACK SHALL BE GALVANIZED OR CONSTRUCTED OF APPROVED CORROSION MATERIALS.

ORIFICE PLATE DETAIL

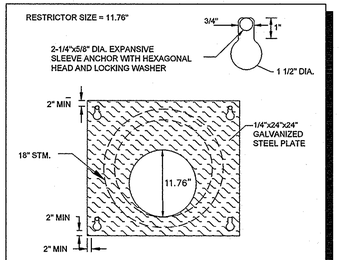

N.T.S.

OUTFALL STRUCTURE DETAIL

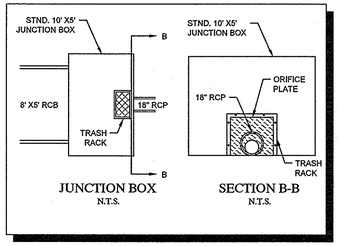

JUNCTION BOX
N.T.S.

SECTION B-B
N.T.S.

RECORD DRAWINGS (May 2014)
Information Provided By:
BOB MOORE CONSTRUCTION

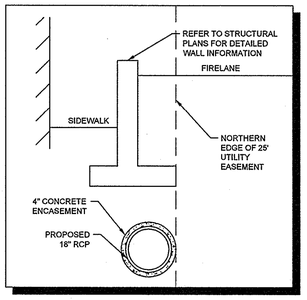

SECTION A-A
N.T.S.

NOTE

PRIOR TO CONSTRUCTION, CONTRACTOR TO NOTIFY ENGINEER IMMEDIATELY SHOULD THERE BE ANY DISCREPANCIES OR IF EXISTING FIELD CONDITIONS VARY FROM THOSE SHOWN ON THESE PLANS.

BENCHMARKS

BM 5 "⊠" SET ON NORTHWEST CORNER OF CONCRETE PAD FOR SWB TELEPHONE BOX, 15'± EAST OF NORTHBOUND DALLAS NORTH TOLLWAY ACCESS ROAD AND 1,450'± SOUTH OF BELT LINE ROAD.

ELEV=635.30

BM 6 "⊠" SET ON SOUTHEAST CORNER OF CURB INLET; 15'± WEST OF MONTFORT DRIVE AND 750'± SOUTH OF SAKOWITZ DRIVE.

ELEV=603.67

BM 9 "⊠" SET ON SOUTHEAST CORNER OF CURB INLET ON EAST SIDE OF DALLAS NORTH TOLLWAY ACCESS ROAD AND 300'± SOUTH OF BELT LINE ROAD.

ELEV=627.34

No.	REVISIONS	DATE	BY

Kimley-Horn and Associates, Inc.
State of Texas Registration No. F-928
5750 GENESIS COURT, SUITE 200, FRISCO, TX 75034
PHONE: 972-335-3580 FAX: 972-335-3779
WWW.KIMLEY-HORN.COM

STATE OF TEXAS
ROY BRASWELL
104908
LICENSED PROFESSIONAL ENGINEER
7/16/13

KHA PROJECT 063319038	
DATE 07/16/2013	
SCALE AS SHOWN	DESIGNED BY TBB
	DRAWN BY AAE
	CHECKED BY TBB

VILLAGE ON THE PARKWAY PHASE II
ADDISON, TEXAS

STORM SEWER PLAN

SHEET NUMBER
C-10

PLOTTED BY WHITE, SARAH BETH 7/16/2013 10:25 AM
DWG NAME K:\FRI_CIV\063319038-VOPW\DWG\PLAN SET PHASE II\C-10-STORM SEWER PLAN.DWG [C-11 STORM SEWER PLAN]
LAST SAVED 7/16/2013 9:59 AM
This document, together with the concepts and designs presented herein, as an instrument of service, is intended only for the specific purpose and client for which it was prepared. Reuse of and improper reliance on this document without written authorization and adaptation by Kimley-Horn and Associates, Inc. shall be without liability to Kimley-Horn and Associates, Inc.